ELECTRICAL LEGEND

SINGLE-LINE:

- SHIELDED TRANSFROMER
- TRANSFORMER
- PANEL
- GROUNDING CONNECTION
- CIRCUIT BREAKER
- CURRENT TRANSFORMER
- METER
- GENERATOR
- TRANSFER SWITCH
- SURGE PROTECTION DEVICE
- VARIABLE FREQUENCY DRIVE
- SOFT START W/ BYPASS CONTACTORS
- FUSE
- STARTER. SUBSCRIPT DENOTES: SIZE/TYPE.
- LINE/LOAD REACTOR
- OVERLOAD
- ELAPSED TIME METER
- DISCONNECT
- MOTOR CONNECTION. SUBSCRIPT DENOTES HORSE POWER.
- GENERAL LOAD CONNECTION.
- E-STOP (RED MUSHROOM HEAD)
- PUSH BUTTON STATION AT CONTROL PANEL

LIGHTING FIXTURES (SEE "LIGHTING FIXTURE SCHEDULE" FOR ADDITIONAL REQUIREMENTS):

- 4' SURFACE/SUSPENDED MOUNT
- AREA POLE MOUNT

LIGHTING CONTROLS:

- PHOTOELECTRIC CELL WALL MOUNT.
- SINGLE POLE SWITCH (120/277V, 20A UNO), WALL MOUNT 48" AFF.

CONTROLS:

- SINGLE BREAK SWITCH
- TEMPERATURE SWITCH NORMALLY OPEN
- TEMPERATURE SWITCH NORMALLY CLOSED
- PRESSURE SWITCH NORMALLY OPEN
- PRESSURE SWITCH NORMALLY CLOSED
- FLOAT SWITCH NORMALLY OPEN
- FLOAT SWITCH NORMALLY CLOSED
- TIME DELAY SWITCH NORMALLY OPEN
- TIME DELAY SWITCH NORMALLY CLOSED
- RELAY COIL (SUBSCRIPT DENOTES RELAY)
- RELAY CONTACT NORMALLY OPEN (SUBSCRIPT DENOTES RELAY)
- RELAY CONTACT NORMALLY CLOSED (SUBSCRIPT DENOTES RELAY)
- INTRINSICALLY SAFE BARRIER RELAY (SUBSCRIPT DENOTES RELAY)
- HAND-OFF-AUTOMATIC SWITCH
- TERMINAL BLOCK (SUBSCRIPT DENOTES TERMINAL BLOCK NUMBER)

POWER DEVICES:

- SIMPLEX RECEPTACLE (NEMA 5-20R UNO), WALL MOUNT 18" AFF UNO. SUBSCRIPT DENOTES FOLLOWING:
  - G – GROUND FAULT CIRCUIT INTERRUPTION
  - WP – WEATHERPROOF (IN-USE COVER UNO)
- DUPLEX RECEPTACLE (NEMA 5-20R UNO), WALL MOUNT 18" AFF UNO.

INSTRUMENTATION (SEE "FIELD INSTRUMENT SCHEDULE" FOR ADDITIONAL REQUIREMENTS):

- CONTROL PANEL ('X' INDICATES NAME)
- ELECTRICALLY OPERATED VALVE
- SOLENOID VALVE
- LEVEL TRANSMITTER
- SUBMERSIBLE PRESSURE TRANSDUCER
- FLOWMETER

GENERAL:

- X:XXX.XX CONDUIT/CABLE TAG
- X KEY NOTE TAG

ELECTRICAL ABBREVIATIONS

&	AND
A, AMP	AMPERE
AC	ALTERNATING CURRENT, ABOVE COUNTER
AF	AMPERE FRAME, AMPERE FUSE
AFF	ABOVE FINISHED FLOOR
AFG	ABOVE FINISHED GRADE
AL	ALUMINUM
ANSI	AMERICAN NATIONAL STANDARDS INSTITUTE
AT	AMPERE TRIP
ATS	AUTOMATIC TRANSFER SWITCH
AUX	AUXILIARY
AWG	AMERICAN WIRE GAUGE
BFG	BELOW FINISHED GRADE
BKR	BREAKER
C	CONDUIT
CB	CIRCUIT BREAKER
CKT	CIRCUIT
CLF	CURRENT LIMITING FUSE
CNTL	CONTROL
CP	CONTROL PANEL
CT	CURRENT TRANSFORMER
CU	COPPER
C/L	CENTERLINE
°	DEGREE
Δ	DELTA CONNECTION
D	DEPTH
DC	DIRECT CURRENT
DP	DISTRIBUTION PANELBOARD
DS, DISC	DISCONNECT SWITCH
DWG	DRAWING
E, EM	EMERGENCY
EA	EACH
E-STOP	EMERGENCY STOP
ETC	ET CETERA, AND OTHER THINGS, AND SO ON
EX, EXIST	EXISTING
EXP	EXPLOSION PROOF
EXT	EXTERIOR
F	FUSE
FBC	FLORIDA BUILDING CODE
FLR	FLOOR
G, GND	GROUND
GF	GROUND FAULT
GFCI	GROUND FAULT CIRCUIT INTERRUPTING
GFI	GROUND FAULT INTERRUPTING
H	HEIGHT
HOA	HAND-OFF-AUTOMATIC
HP	HORSEPOWER
HV	HIGH VOLTAGE, 600VAC
HVAC	HEATING, VENTING, & AIR CONDITIONING
I/O	INPUT/OUTPUT SIGNALS
IEEE	INSTITUTE OF ELECTRICAL AND ELECTRONICS ENGINEERS
IESNA	ILLUMINATING ENGINEERING SOCIETY OF NORTH AMERICA
IMC	INTERMEDIATE METAL CONDUIT
J, JB	JUNCTION BOX
k	KILO
kAIC	KILOAMPERES INTERRUPTING CAPACITY
kCMIL	KILOCIRCULAR MILS
kVA	KILOVOLT-AMPS
kW	KILOWATTS
kWH	KILOWATT-HOUR
L	LENGTH
LC	LIGHTING CONTACTOR
LFMC	LIQUID-TIGHT FLEXIBLE METAL CONDUIT
LPI	LIGHTING PROTECTION INSTITUTE
LTG	LIGHTING
LV	LOW VOLTAGE, 240VAC
mA	MILLIAMPERE
MAX	MAXIMUM
MCA	MINIMUM CIRCUIT AMPACITY
MCB	MAIN CIRCUIT BREAKER
MCC	MOTOR CONTROL CENTER
MFR, MFG	MANUFACTURER
MIN	MINIMUM
MLO	MAIN LUGS ONLY
MPH	MILES PER HOUR
MTD, MTG	MOUNTED, MOUNTING
MNT	MOUNTING HEIGHT
N	NEUTRAL, NORMAL
NC	NORMALLY CLOSED
NEC	NATIONAL ELECTRICAL CODE
NEMA	NATINAL ELECTRICAL MANUFACTURERS ASSOCIATION
NF	NON-FUSIBLE
NFPA	NATIONAL FIRE PROTECTION ASSOCIATION
NIC	NOT IN CONTRACT
NO	NORMALLY OPEN
NTS	NOT TO SCALE
P	POLE
PDB	POWER DISTRIBUTION BLOCK
PLC	PROGRAMMABLE LOGIC CONTROLLER
PMT	PAD MOUNT TRANSFORMER
PNL	PANEL
PRI	PRIMARY
PVC	POLYVINL CHLORIDE CONDUIT
PWR	POWER
RCPT	RECEPTACLE
RMC	RIGID METAL CONDUIT
RMS	ROOT MEAN SQUARE
RNC	RIGID NON-METALLIC CONDUIT
RPM	REVOLUTIONS PER MINUTE
SCA	SHORT CIRCUIT AMPERES
SCADA	SUPERVISORY CONTROL AND DATA ACQUISITION
SEC	SECONDARY
SHLD	SHIELD
SPD	SURGE PROTECTION DEVICE
SS	STAINLESS STEEL, SOFT START
ST	SHUNT TRIP
STD	STANDARD
SW	SWITCH
SWBD	SWITCHBOARD
TB	TERMINAL BLOCK
THD	TOTAL HARMONIC DISTORTION
TSP	TWISTED SHIELDED PAIR
TYP	TYPICAL
UC	UNDER COUNTER
UG	UNDERGROUND
UL	UNDERWRITER'S LABORATORIES
UNO	UNLESS NOTED OTHERWISE
UPS	UNINTERRUPTABLE POWER SUPPLY
V	VOLTS
VFD	VARIABLE FREQUENCY DRIVE
W	WIDTH
WP	WEATHERPROOF
WSR	WITHSTAND RATING
W/	WITH
XFMR	TRANSFORMER
Y	WYE CONNECTION
Z	IMPEDANCE

BASKERVILLE-DONOVAN, INC.
INNOVATIVE INFRASTRUCTURE SOLUTIONS
PENSACOLA ■ PANAMA CITY ■ TALLAHASSEE ■ MOBILE
449 WEST MAIN STREET
PENSACOLA, FLORIDA 32502 (850)438-9661
ENGINEERING BUSINESS: EB-0000340

MICHAEL T. RHODES JR., P.E.
FL Reg. Engineer #67597

ECUA BAYOU MARCUS HEADWORKS IMPROVEMENTS

ESCAMBIA COUNTY, FLORIDA

NO.	DATE	APPR.	REVISION/ACTION TAKEN

This drawing is the property of BASKERVILLE-DONOVAN, Inc. and shall not be reproduced in whole or in part. It is not to be used on any other project and is to be returned upon request.

NOT RELEASED FOR CONSTRUCTION

BY DATE

PROJECT NO: 27941.05
DESIGNED BY: ABK
DRAWN BY: ABK
CHK'D BY: MTR
PROJ. MGR: RWD
DATE: OCTOBER 2012

ELECTRICAL LEGEND & ABBREVIATIONS

E-001

K:\279\27941.05 - Bayou Marcus\DWG\Electrical\E-001-002.dwg, Nov 27, 2012 - 11:05:42AM, dmoeller

GENERAL ELECTRICAL NOTES

NEW WORK:

1. ENTIRE ELECTRICAL INSTALLATION SHALL BE IN ACCORDANCE WITH THE LATEST EDITION (UNLESS NOTED OTHERWISE) OF THE FOLLOWING CODES AND STANDARDS:
   - 1.1. NATIONAL ELECTRICAL CODE (NFPA 70).
   - 1.2. NATIONAL ELECTRICAL SAFETY CODE (NFPA 70E).
   - 1.3. STANDARD FOR THE INSTALLATION OF LIGHTNING PROTECTION SYSTEMS (NFPA 780).
   - 1.4. STANDARD FOR FIRE PROTECTION IN WASTEWATER TREATMENT AND COLLECTION FACILITIES (NFPA 820).
2. ALL ACCEPTABLE EQUIVALENT ITEMS (EQUIPMENT, DEVICES, ETC.) SHALL BE SUBMITTED FOR REVIEW AND APPROVAL. ANY ITEMS PURCHASED AND/OR INSTALLED AND NOT ACCEPTED SHALL BE SUBJECT TO FULL REPLACEMENT OF ITEM(S) AT COST TO CONTRACTOR, AND NO COST TO OWNER OR DESIGN FIRM.
3. THE CONTRACTOR SHALL BE RESPONSIBLE FOR READING ALL PROJECT SPECIFICATIONS AND WILL BE RESPONSIBLE FOR MEETING ALL REQUIREMENTS OUTLINED IN THE SPECIFICATIONS.
4. CONTRACTOR SHALL COORDINATE ALL WORK WITH OTHER TRADES PRIOR TO ROUGH–IN AND INSTALLATION.
5. WORKING SPACE FOR ALL ELECTRICAL AND CONTROL EQUIPMENT OPERATING AT 600V VOLTS OR LESS TO GROUND AND LIKELY TO REQUIRE EXAMINATION, ADJUSTMENT, SERVICING, OR MAINTENANCE WHILE ENERGIZED SHALL COMPLY WITH NEC, ARTICLE 110.26.
6. DEDICATED EQUIPMENT SPACE FOR ALL ELECTRICAL AND CONTROL EQUIPMENT SHALL BE PROTECTED FROM DAMAGE AND SHALL COMPLY WITH NEC, ARTICLE 110.26.
7. ELECTRICAL CONTRACTOR SHALL COORDINATE AND MAKE OTHER TRADES AWARE OF THE SPACE REQUIREMENTS REQUIRED BY ARTICLE 110.26 IN THE NEC TO ENSURE COMPLIANCE.
8. THE ELECTRICAL DESIGN PROVIDES A NUMBER OF BRANCH CIRCUITS, AMPACITY AND OVERCURRENT PROTECTION FOR OTHER DIVISIONS DESIGN BASIS EQUIPMENT CONFORMING TO MANUFACTURER'S SPECIFICATIONS AVAILABLE AT TIME OF DESIGN. THE CONTRACTOR SHALL VERIFY ALL EQUIPMENT LOADS PRIOR TO ROUGH–IN. IF REQUIREMENTS OF EQUIPMENT ACTUALLY PROVIDED UNDER CONTRACT FOR CONSTRUCTION ARE DIFFERENT, CONTRACTOR SHALL MAKE ALL CHANGES NECESSARY WITHOUT INCREASE IN THE CONTRACT AMOUNT. SUCH CHANGES SHALL BE BASED UPON REQUIREMENTS, NAMEPLATE VALUES AND CODE REQUIREMENTS, WHICHEVER IS MORE STRINGENT, AND MAY INCLUDE, BUT ARE NOT LIMITED TO: SIZE OF CONDUCTORS, SIZE OF CONDUIT, NUMBER OF CONDUCTORS AND CONDUITS, TYPE AND SIZE OF CIRCUIT BREAKER OR DISCONNECT, OVERLOADS, STARTERS, VARIABLE FREQUENCY DRIVES, FUSE PROTECTION AND ADDITIONAL DISCONNECT SWITCHES.
9. THE ELECTRICAL CONTRACTOR IS REQUIRED TO COORDINATE WITH ALL PROCESS EQUIPMENT MANUFACTURERS, TO PROVIDE AND INSTALL FOR ELECTRICAL AND CONTROLS, ALL (BUT NOT LIMITED TO) THE FOLLOWING: CIRCUIT BREAKERS, DISCONNECTS, STARTERS, VARIABLE FREQUENCY DRIVES, CONTROL PANELS, EQUIPMENT, DEVICES, CONDUITS, CONDUCTORS, ETC. AS REQUIRED TO PROVIDE A FULLY OPERATIONAL AND CODE COMPLIANT ELECTRICAL SYSTEM. THIS MAY INCLUDE THE ADDITION OF ELECTRICAL ITEMS NOT SHOWN ON THE ELECTRICAL PLANS, BUT REQUIRED FOR SYSTEM OPERATION.
10. CONTRACTOR SHALL MAINTAIN OPERATION OF THE ELECTRICAL SERVICE DURING THE CONSTRUCTION.
11. APPROVED CRITICAL PATH SCHEDULE, SHOP DRAWINGS, AND COORDINATION DRAWINGS ARE REQUIRED PRIOR TO PAYMENT FOR ANY ELECTRICAL WORK.
12. EXISTING UTILITIES AND OTHER UNDERGROUND OR CONCEALED ITEMS ARE SHOWN FOR REFERENCE ONLY. ADDITIONAL ITEMS NOT SHOWN MAY BE PRESENT AND LOCATIONS MAY DIFFER FROM THAT SHOWN ON DRAWINGS. CONTRACTOR SHALL EXCAVATE AND CONDUCT DEMOLITION SO AS TO AVOID DAMAGE TO EXISTING ITEMS. IF EXISTING OR NEW ITEMS ARE DAMAGED, THE CONTRACTOR SHALL NOTIFY THE OWNER AND ENGINEER AT ONCE OF ALL DAMAGE AND SHALL REPAIR (OR REPLACE IF NECESSARY) TO THE ORIGINAL CONDITION TO THE SATISFACTION OF OWNER AND ENGINEER AT NO CHARGE IN THE CONTRACT AMOUNT.
13. ELECTRICAL CONTRACTOR SHALL PROVIDE CROSS SECTIONS OF ALL UNDERGROUND DUCTS SHOWING PIPE CROSSINGS AND CONFLICT RESOLUTION.
14. THE CONTRACTOR SHALL BE RESPONSIBLE FOR PROVIDING DETAILED ELECTRICAL AND CONTROL EQUIPMENT LAYOUT DRAWINGS TO THE ENGINEER FOR APPROVAL PRIOR TO INSTALLATION.
15. ALL FIELD MOUNTED CONTROL PANELS SHALL BE ORIENTED IN A NORTH/SOUTH CONFIGURATION SUCH THAT THE FRONT MOUNTED DISPLAYS ARE NOT SUBJECTED TO DIRECT SUN LIGHT.
16. ALL NEW ELECTRICAL DISCONNECTS, EQUIPMENT, PROGRAMMABLE LOGIC CONTROLLERS, ETC. SHALL BE PROVIDED WITH SUITABLE PHENOLIC NAMEPLATES. NAMEPLATE SHALL INDICATE THE IMMEDIATE FEEDING SOURCE SWITCHGEAR, MOTOR CONTROL CENTER, OR PANELBOARD.
17. ALL, PROGRAMMABLE LOGIC CONTROLLERS, ETC. LEGENDS SHALL BE TYPED AND REFLECT UP–TO–DATE CONDITIONS.
18. FOR OTHER THAN LIGHTING FIXTURES, CATALOG NUMBERS AND MANUFACTURERS SHOWN ARE TO INDICATE DEVICE QUALITY, AND TYPE OF ITEM DESIRED ONLY.
19. ALL ELECTRICAL ENCLOSURES SHALL BE RATED AS FOLLOWS FOR THE INSTALLATION AREA, UNLESS NOTED OTHERWISE:
   - 19.1. NEMA 1 – INTERIOR.
   - 19.2. NEMA 4X STAINLESS STEEL – EXTERIOR.
20. PROVIDE 3" CONCRETE HOUSE KEEPING PAD UNDER ALL FLOOR/GRADE MOUNTED ELECTRICAL AND CONTROL EQUIPMENT.
21. ELECTRICAL CONTRACTOR SHALL PROVIDE ADEQUATE AND PROPER SUPPORT FOR ALL ELECTRICAL OUTLETS, DEVICES, LIGHT FIXTURES, ETC. MOUNTED ON STRUCTURE.
22. ALL SUPPORTING AND FASTENING DEVICES SHALL BE STAINLESS STEEL.
23. ALL EXTERIOR RECEPTACLES SHALL BE UL LISTED AND SUITABLE FOR USE IN WET LOCATIONS.
24. ALL RECEPTACLES LOCATED OUTSIDE OR WITHIN 6'–0" OF A WATER SOURCE SHALL HAVE GROUND FAULT CIRCUIT INTERRUPTION.
25. ALL CIRCUITS TO NON–GFCI RECEPTACLES, LIGHTS, ETC., THAT ARE SERVED FROM A GFCI RECEPTACLE, SHALL BE CONNECTED TO THE LINE SIDE OF THE SERVING GFCI RECEPTACLE.
26. THE CONTRACTOR SHALL TAG ALL RECEPTACLE OUTLETS. TAGS SHALL BE LAEBLED AS FOLLOWS: (PANEL DESIGNATION) – (CKT NUMBER).
27. ALL DIMENSIONS TO DEVICES SHALL BE TO CENTERLINE OF DEVICE, UNLESS NOTED OTHERWISE. ALL DIMENSIONS TO LIGHTING FIXTURES SHALL BE TO BOTTOM OF FIXTURE, UNLESS NOTED OTHERWISE.
28. THE CONDUIT MATERIAL SHALL BE AS FOLLOWS (UNLESS NOTED OTHERWISE):
   - 28.1. BELOW GRADE – RIGID NONMETALLIC (PVC SCHED 40).
   - 28.2. RISER FROM 36" BELOW GRADE – RIGID METALLIC (ALUMINUM OR STAINLESS STEEL).
   - 28.3. CONCEALED RISER FROM 36" BELOW GRADE – RIGID NONMETALLIC (PVC SCHED 40).
   - 28.4. ABOVE GRADE, RIGID METALLIC (ALUMINUM OR STAINLESS STEEL).
   - 28.5. CLASS 1 SPACE – THREADED RIGID METAL (ALUMINUM OR STAINLESS STEEL).
   - 28.6. CLASS 2 SPACE – THREADED RIGID METAL (ALUMINUM OR STAINLESS STEEL).
29. FINAL CONDUIT CONNECTIONS TO HEAT PUMPS, AIR HANDLERS, EXHAUST FANS, WATER HEATERS, ETC. SHALL BE FLEXIBLE METAL (OUTSIDE AND OTHER DAMP LOCATIONS).
30. THE FOLLOWING SHALL BE COATED WITH 2 WRAPS OF CORROSION RESISTANT TAPE WHEN IN CONTACT WITH CONCRETE OR EARTH (UNLESS NOTED OTHERWISE):
   - 30.1. RIGID ALUMINUM.
31. ALL CONDUITS NOT LOCATED UNDER SLAB SHALL HAVE A MINIMUM BURIAL DEPTH OF 42", UNLESS NOTED OTHERWISE.
32. MINIMUM SIZE CONDUIT SHALL BE 1" (UNLESS NOTED OTHERWISE). FLEX CONDUITS SHALL NOT BE PERMITTED LESS THAN 3/4" (UNLESS NOTED OTHERWISE). PROVIDE 3/4" REDUCERS FOR HAND CONNECTIONS.
33. CONDUIT ROUTINGS AND DEVICE/EQUIPMENT LOCATIONS SHOWN ARE DIAGRAMMATIC ONLY. CONTRACTOR SHALL FIELD ROUTE AND LOCATE AS REQUIRED. CONDUIT ROUTINGS SHALL BE ROUTED PARALLEL TO STRUCTURE.
34. CONTRACTOR SHALL PROVIDE PULL BOXES IN POWER CIRCUIT CONDUIT AS REQUIRED TO LIMIT THE NUMBER OF BENDS TO A MAXIMUM OF 270° OR THREE 90° BENDS.
35. PROVIDE CONDUIT EXPANSION FITTINGS AS CONDUIT CROSSES BUILDING EXPANSION JOINTS.
36. PENETRATIONS FOR ELECTRICAL CONDUITS THROUGH FIRE RATED WALLS SHALL BE PROPERLY STOPPED IN ACCORDANCE WITH NFPA 70 AND 101.
37. CONDUITS LEAVING OR ENTERING BUILDING SHALL BE SEALED PER NEC TO PREVENT ENTRANCE OF MOISTURE.
38. PROVIDE ADEQUATE PULL STRINGS (200LBS MINIMUM) FOR ALL EMPTY CONDUIT.
39. ALL WIRE SHALL BE STRANDED COPPER.
40. ALL ELECTRICAL CIRCUITS SHALL INCLUDE A GREEN GROUNDING CONDUCTOR SIZED PER NEC.
41. 24V CONTROL, 120V CONTROL, AND POWER CONDUITS SHALL BE SEPARATED BY 12" MINIMUM, AND SHALL BE IN SEPARATE JUNCTION BOXES AND DUCT BANKS.
42. A SEPARATION OF AT LEAST 6'–0" MINIMUM SHALL BE MAINTAINED BETWEEN COMMUNICATION WIRES AND CABLES ON BUILDINGS AND LIGHTNING PROTECTION CONDUCTORS.
43. ALL PARALLEL RUNS OF BRANCH CIRCUITS, FEEDERS, AND SERVICE ENTRANCE CONDUCTORS SHALL BE EQUAL IN LENGTH AND TERMINATED IN THE SAME MANNER.
44. CONTROL CABLES SHALL BE TERMINATED ON TERMINAL BLOCKS. WIRE NUTS ARE PROHIBITED.
45. ALL 4–20mA ANALOG I/O SIGNALS SHALL BE #18 AWG (MINIMUM) SHIELDED TWISTED PAIR, UNLESS NOTED OTHERWISE.
46. THE CONTRACTOR SHALL TAG ALL POWER AND CONTROL SYSTEM CABLING AT ALL TERMINATION POINTS. ALL CABLES SHALL HAVE CORRESPONDING TAG ON OPPOSITE END OF CORRESPONDING CABLE.
47. THE CONTRACTOR SHALL TAG ALL TERMINAL BLOCKS. TAGS SHALL BE LABELED WITH THE FIELD DEVICE NAME, UNLESS NOTED OTHERWISE.
48. FINAL CONNECTION TO ALL EQUIPMENT IS SHOWN DIAGRAMMATIC. PROVIDE FINAL CONNECTION AS REQUIRED PER MANUFACTURER OF EQUIPMENT.
49. CONTRACTOR IS RESPONSIBLE FOR PROVIDING THE CORRECT NUMBER OF CURRENT CARRYING CONDUCTORS, NON–CURRENT CARRYING CONDUCTORS, AND GROUNDING CONDUCTORS TO MEET THE INTENT OF ALL CIRCUITING AND SWITCHING.
50. POWER CONDUCTORS SHALL BE AS FOLLOWS:
   - 50.1. 208Y/120V SYSTEM:
     - 50.1.1. PHASE A – BLACK.
     - 50.1.2. PHASE B – RED.
     - 50.1.3. PHASE C – BLUE.
     - 50.1.4. NEUTRAL – WHITE.
     - 50.1.5. GROUND – GREEN.
   - 50.2. 480Y/277V SYSTEM:
     - 50.2.1. PHASE A – BROWN.
     - 50.2.2. PHASE B – ORANGE.
     - 50.2.3. PHASE C – YELLOW.
     - 50.2.4. NEUTRAL – GRAY.
     - 50.2.5. GREEN W/ YELLOW STRIPE.
51. THE INSTALLED GROUNDING SYSTEM SHALL HAVE A RESISTANCE OF LESS THAN 5 OHMS TO GROUND.
52. SURGE SUPPRESSION EQUIPMENT SHALL MEET OR EXCEED THE LATEST UL 1449 AND ANSI/IEEE REQUIREMENTS FOR TVSS DEVICES, INCLUDING NEMA LS–1.
53. THE CONTRACTOR SHALL PROVIDE 3 SPARE FUSES FOR EACH TYPE OF FUSE INSTALLED ON THE PROJECT, INCLUDING ALL EQUIPMENT AND CONTROL PANELS.
54. CONTRACTOR SHALL MAINTAIN A SET OF PRINTS AND MARK–UP DURING CONSTRUCTION TO REFLECT "AS–BUILT" CONDITIONS. PRINTS SHALL BE DELIVERED TO THE ENGINEER UPON COMPLETION OF THE PROJECT.

EXISTING WORK TO REMAIN OR TO BE RELOCATED:

1. CONTRACTOR SHALL FIELD VERIFY ALL EXISTING CONDITIONS.
2. CONTRACTOR SHALL FIELD VERIFY CONDUIT SIZES, CONDUIT ROUTES, AND EQUIPMENT LOCATIONS. CONDUIT CAN BE REUSED PROVIDED IT IS SUITABLE FOR INTENDED USE IN ACCORDANCE WITH THE NEC REQUIREMENTS.
3. CONTRACTOR SHALL VISIT THE JOB SITE AND BECOME FAMILIAR WITH THE EXTENT OF WORK REQUIRED TO COMPLETE THE JOB, PRIOR TO BID.
4. CONTRACTOR SHALL NOTE ANY EXISTING DAMAGES TO EQUIPMENT, LIGHT FIXTURES, DEVICES, ETC. IN PROJECT WORK AREA DURING FIELD VISIT AND PRIOR TO START OF CONSTRUCTION. A COPY OF THE LIST SHALL BE GIVEN TO THE OWNER AND ENGINEER PRIOR TO THE START OF CONSTRUCTION. FAILURE TO DO SO WILL RESULT IN CONTRACTOR RESPONSIBILITY OF DAMAGED ITEMS.
5. ALL SIDEWALKS AND PARKING LOT ASPHALT AREAS THAT ARE CUT DUE TO NEW ELECTRICAL SERVICES SHALL BE REPAIRED TO MATCH EXISTING, UNLESS NOTED OTHERWISE.
6. ALL BRANCH CIRCUITS AND FEEDERS OUTSIDE OF CONTRACT SHALL BE MAINTAINED DURING CONSTRUCTION.

EXISTING WORK TO BE REMOVED (DEMOLITION):

1. DASHED EQUIPMENT, DEVICES, FIXTURES, ETC. ARE INDICATING TO BE REMOVED, UNLESS NOTED OTHERWISE.
2. PROVIDE SUITABLE ENCLOSURE REPLACEMENTS (KNOCKOUT SEALS, ETC.) FOR ALL BRANCH CIRCUIT CONDUITS AND FEEDER CONDUITS THAT ARE REMOVED FROM EXISTING SWITCHGEAR, MOTOR CONTROL CENTERS, PANELBOARDS, ETC. THAT ARE REMAINING.
3. ALL ITEMS REMOVED SHALL BECOME THE PROPERTY OF THE OWNER, UNLESS NOTED OTHERWISE. REMOVE DEMOLISHED DEVICES FROM CONSTRUCTION SITE. DISPOSE OF IN ACCORDANCE WITH APPLICABLE FEDERAL, STATE, AND LOCAL REGULATIONS.
4. ALL WALL PENETRATIONS AND HOLES LEFT OVER FROM DEMOLITION SHALL BE FILLED IN AND REPAIRED TO MATCH SURROUNDING SURFACES.
5. ALL DEMOLITION WORK THAT INVOLVES MECHANICAL EQUIPMENT SHALL BE COORDINATED BETWEEN ELECTRICAL AND MECHANICAL CONTRACTORS.

BASKERVILLE-DONOVAN, INC.
INNOVATIVE INFRASTRUCTURE SOLUTIONS
PENSACOLA ■ PANAMA CITY ■ TALLAHASSEE ■ MOBILE
449 WEST MAIN STREET
PENSACOLA, FLORIDA 32502 (850)438–9661
ENGINEERING BUSINESS: EB–0000340

MICHAEL T. RHODES JR., P.E.
FL Reg. Engineer #67597

ECUA BAYOU MARCUS HEADWORKS IMPROVEMENTS

ESCAMBIA COUNTY, FLORIDA

NO.	DATE	APPR.	REVISION/ACTION TAKEN

This drawing is the property of BASKERVILLE-DONOVAN, INC. and is not to be copied, in whole or in part, it is not to be used on any other project and is to be returned upon request.

NOT RELEASED FOR CONSTRUCTION

BY DATE

PROJECT NO: 27941.05
DESIGNED BY: ABK
DRAWN BY: ABK
CHK'D BY: MTR
PROJ. MGR: RWD
DATE: OCTOBER 2012

ELECTRICAL GENERAL NOTES

E–002

K:\279\27941.05 – Bayou Marcus\DWG\Electrical\E–001–002.dwg, Nov 27, 2012 – 11:05:44AM, dmoeller

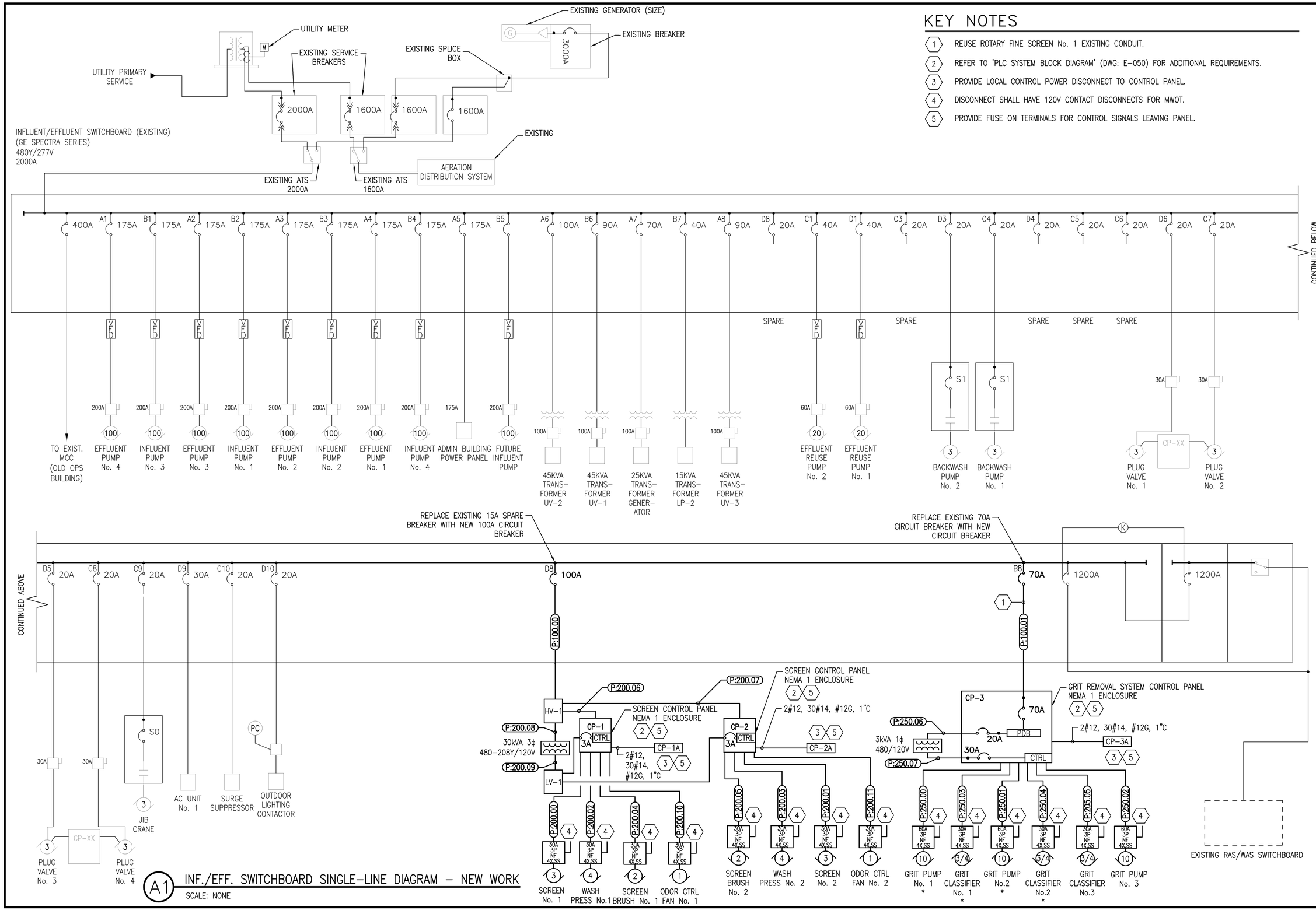

A1 INF./EFF. SWITCHBOARD SINGLE-LINE DIAGRAM – NEW WORK

SCALE: NONE

KEY NOTES

1. REUSE ROTARY FINE SCREEN No. 1 EXISTING CONDUIT.
2. REFER TO 'PLC SYSTEM BLOCK DIAGRAM' (DWG: E-050) FOR ADDITIONAL REQUIREMENTS.
3. PROVIDE LOCAL CONTROL POWER DISCONNECT TO CONTROL PANEL.
4. DISCONNECT SHALL HAVE 120V CONTACT DISCONNECTS FOR MWOT.
5. PROVIDE FUSE ON TERMINALS FOR CONTROL SIGNALS LEAVING PANEL.

BASKERVILLE-DONOVAN, INC.
INNOVATIVE INFRASTRUCTURE SOLUTIONS
PENSACOLA ■ PANAMA CITY ■ TALLAHASSEE ■ MOBILE
449 WEST MAIN STREET
PENSACOLA, FLORIDA 32502 (850)438-9661
ENGINEERING BUSINESS: EB-0000340

MICHAEL T. RAMOES JR., P.E.
FL Reg. Engineer #67597

ECUA BAYOU MARCUS HEADWORKS IMPROVEMENTS

ESCAMBIA COUNTY, FLORIDA

NO.	DATE	APPR.	REVISION/ACTION TAKEN

This drawing is the property of BASKERVILLE-DONOVAN, INC. and shall be returned on request or in part. It is not to be used on any other project and is to be returned upon request.

NOT RELEASED FOR CONSTRUCTION

BY DATE

PROJECT NO: 27941.05

DESIGNED BY: ABK

DRAWN BY: ABK

CHK'D BY: MTR

PROJ. MGR: RWD

DATE: OCTOBER 2012

ELECTRICAL SINGLE-LINE DIAGRAM NEW WORK

E-011

K:\279\27941.05 – Bayou Marcus\DWG\Electrical\E-010-011.dwg, Dec 05, 2012 – 4:16:22PM, toverton

KEY NOTES:

1. INTEGRATE AND UPDATE EXISTING SCADA HMI SYSTEM FOR SCREEN CONTROL PANELS AND GRIT REMOVAL PANEL. UPGRADE AND PROVIDE ADDITIONAL COMPONENTS, HARDWARE, SOFTWARE, ETC. AS REQUIRED FOR INTERFACE. SUMMARY OF REQUIREMENTS SHALL CONSIST OF THE FOLLOWING:
   - REMOVE EXISTING GRIT REMOVAL SYSTEM.
   - PROVIDE NEW SCREEN INTERFACE FOR 2 SCREEN SYSTEMS (2 CONTROL PANEL INTERFACE).
   - PROVIDE NEW GRIT REMOVAL INTERFACE FOR 3 GRIT KING SYSTEMS (1 CONTROL PANEL INTERFACE).

   COORDINATE AND VERIFY ALL FINAL REQUIREMENTS WITH OWNER.
2. PROVIDE FIBER PATCH PANEL WITHIN EXISTING PLC CABINET. PANEL SHALL BE 20 PORT FOR MULTI-MODE TRANSMISSION AND SIMULTANEOUS TRANSMIT/RECEIVE CAPABILITY. FIELD COORDINATE MOUNTING TO THE BACK WALL OF EXISTING PLC CABINET.
3. SCREEN SYSTEM CONTROL PANEL SHALL BE PROVIDED BY SCREEN MANUFACTURE'S PROCESS SYSTEMS INTEGRATOR. CONTROL PANEL SHALL HAVE THE SAME TYPE OF COMPONENTS REQUIRED FOR THE PLANT CONTROL PANELS. COORDINATE WITH SPECIFICATIONS FOR ADDITIONAL REQUIREMENTS.
4. GRIT REMOVAL SYSTEM CONTROL PANEL SHALL BE PROVIDED BY GRIT REMOVAL MANUFACTURE'S PROCESS SYSTEMS INTEGRATOR. CONTROL PANEL SHALL HAVE THE SAME TYPE OF COMPONENTS REQUIRED FOR THE PLANT CONTROL PANELS. COORDINATE WITH SPECIFICATIONS FOR ADDITIONAL REQUIREMENTS.
5. PROVIDE NEW CONDUIT TO INFLUENT/EFFLUENT SWITCHBOARD, AND ROUTE CABLE THROUGH EXISTING SPARE CONDUIT (REMOVED ROTARY FINE SCREEN POWER FEED). PROVIDE SIGN IN SWITCHBOARD INDICATING FIBER FEED THROUGH SWITCHBOARD.
6. HMI SCREEN SHALL HAVE A FLIP DOWN DOOR ON EXTERIOR DOOR OF CONTROL PANEL TO ACCESS HMI SCREEN. HINGES AND DOOR FRAME SHALL BE 316 STAINLESS STEEL.
7. PROVIDE SUNSHIELD ON FRONT OF CONTROL PANEL TO PROVIDE SHADE FOR ALL ON/OFF SWITCHES, INDICATOR LIGHTS,ETC. PROVIDE SUNSHIELD FOR CONTROL PANEL ITSELF. REFER TO SPECIFICATIONS AND DWG: E-051 FOR ADDITIONAL REQUIREMENTS.
8. DISPLAY PANEL SHALL HAVE A DIGITAL READOUT AND BE IN A NEMA 4X ENCLOSURE WITH SUNSHIELD. REFER TO DETAILS (DWG: E-902) FOR ADDITIONAL REQUIREMENTS.

SHEET NOTES:

1. DEFINITIONS:
   1.1. CONTROL SYSTEMS INTEGRATOR: SYSTEMS INTEGRATOR WHO WORKS DIRECTLY FOR THE OWNER.
   1.2. PROCESS SYSTEMS INTEGRATOR: SYSTEMS INTEGRATOR WHO WORKS DIRECTLY FOR THE PROCESS EQUIPMENT MANUFACTURE.
2. MEDIA CONVERTERS SHALL BE MULTIMODE TO ETHERNET CONVERTERS.
3. ETHERNET SWITCHES SHALL BE 4 PORT SWITCHES, UNLESS NOTED OTHERWISE.
4. ALL HMI ON SCREEN AND GRIT REMOVAL CONTROL PANEL ENCLOSURES SHALL BE TOUCH SCREEN INTERFACE OR BACKLIGHT DISPLAY.
5. FIELD VERIFY EXACT LOCATION OF ALL EXISTING CONTROL EQUIPMENT AND SYSTEMS INTEGRATION HARDWARE WITHIN PANELS AND WITH OWNER.
6. CONTROL SYSTEMS INTEGRATOR, CONTRACTOR, AND PROCESS SYSTEMS INTEGRATOR SHALL ALL COORDINATE FOR A COMPLETE AND OPERATIONAL SYSTEM. GENERAL CONTRACTOR IS RESPONSIBLE FOR COORDINATION EFFORTS AND A COMPLETE AND OPERATIONAL SYSTEM.
7. THE FIBER OPTIC SYSTEM SHALL BE PROVIDED BY THE CONTROL SYSTEMS INTEGRATOR. THE CONTROL SYSTEMS INTEGRATOR SHALL BE RESPONSIBLE FOR THE COMMUNICATION OF THE FIBER OPTIC TRANSMISSION OF DATA. ELECTRICAL CONTRACTOR SHALL PROVIDE THE CONDUIT AND INSTALL THE FIBER OPTIC CABLE; THE FIBER OPTIC CABLE SHALL BE PROVIDED BY THE CONTROL SYSTEMS INTEGRATOR. THE CONTROL SYSTEMS INTEGRATOR SHALL MAKE ALL FIBER OPTIC TERMINATIONS IN ACCORDANCE WITH THE SPECIFICATIONS AND MANUFACTURER RECOMMENDATIONS.
8. FIBER OPTIC CABLE SHALL BE 12-STRAND, MULTI-MODE, 62.5/125 MICROMETER JACKET, BREAKOUT CABLE, UNLESS NOTED OTHERWISE.
9. CONTROL SYSTEM INTEGRATOR SHALL FIELD VERIFY ALL EXISTING CONDITIONS PRIOR TO BID.

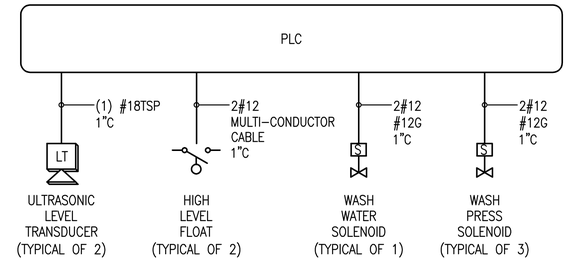

NOTES:
1. COORDINATE ADDITIONAL REQUIREMENTS WITH PROCESS SYSTEMS INTEGRATOR AND ACTUAL EQUIPMENT PROVIDED.

D4 SCREEN PLC BLOCK DIAGRAM – TYPICAL
SCALE: NTS

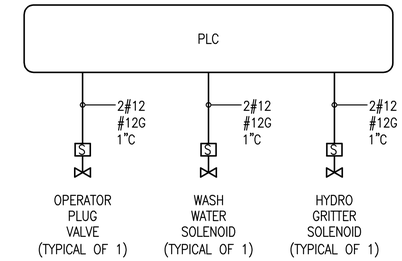

NOTES:
1. COORDINATE ADDITIONAL REQUIREMENTS WITH PROCESS SYSTEMS INTEGRATOR AND ACTUAL EQUIPMENT PROVIDED.

D5 GRIT REMOVAL PLC BLOCK DIAGRAM – TYPICAL
SCALE: NTS

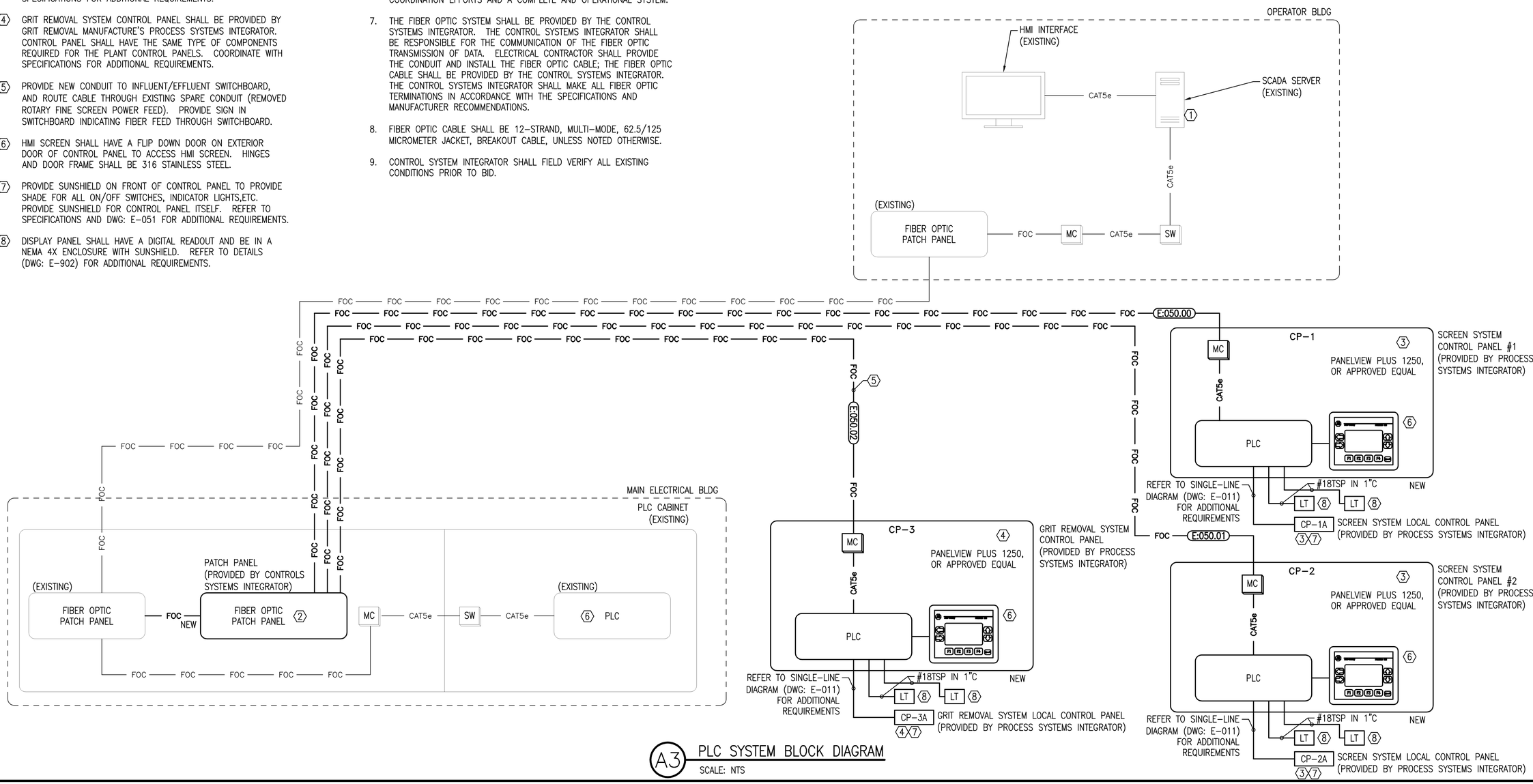

A3 PLC SYSTEM BLOCK DIAGRAM
SCALE: NTS

BASKERVILLE-DONOVAN, INC.
INNOVATIVE INFRASTRUCTURE SOLUTIONS
PENSACOLA ■ PANAMA CITY ■ TALLAHASSEE ■ MOBILE
449 WEST MAIN STREET
PENSACOLA, FLORIDA 32502 (850)438-9661
ENGINEERING BUSINESS: EB-0000340
MICHAEL T. RHODES JR., P.E.
FL Reg. Engineer #67597

ECUA BAYOU MARCUS HEADWORKS IMPROVEMENTS
ESCAMBIA COUNTY, FLORIDA

NO.	DATE	APPR.	REVISION/ACTION TAKEN

This drawing is the property of BASKERVILLE-DONOVAN, INC. and shall be reproduced in whole or in part. It is not to be used on any other project and is to be returned upon request.

NOT RELEASED FOR CONSTRUCTION
BY DATE

PROJECT NO: 27941.05
DESIGNED BY: ABK
DRAWN BY: ABK
CHK'D BY: MTR
PROJ. MGR: RWD
DATE: OCTOBER 2012

ELECTRICAL
PLC BLOCK DIAGRAM

E-050

K:\279\27941.05 - Bayou Marcus\DWG\Electrical\E-050.dwg, Dec 05, 2012 - 4:17:51PM, toverton

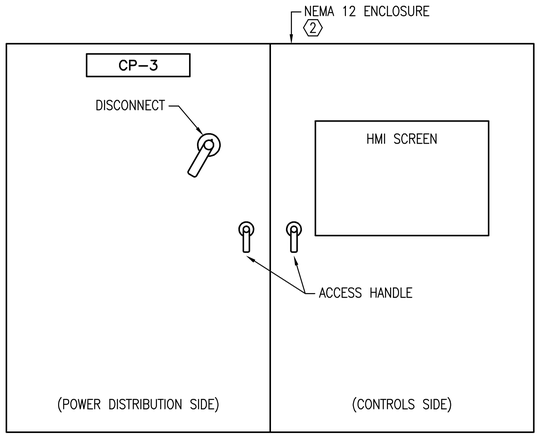

EXTERIOR ELEVATION

C1 GRIT REMOVAL CONTROL PANEL ELEVATION – CP-3

NOT TO SCALE

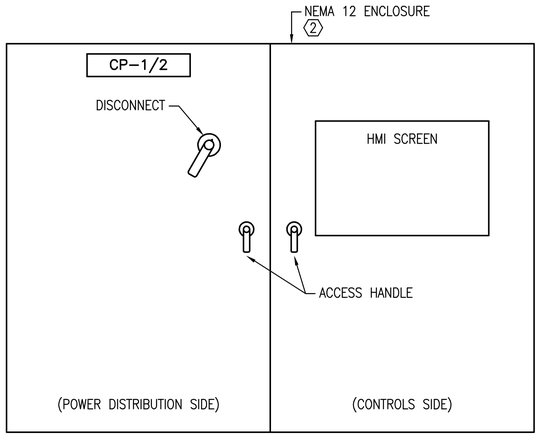

EXTERIOR ELEVATION

C3 SCREENS CONTROL PANEL ELEVATION – CP-1 AND CP-2

NOT TO SCALE

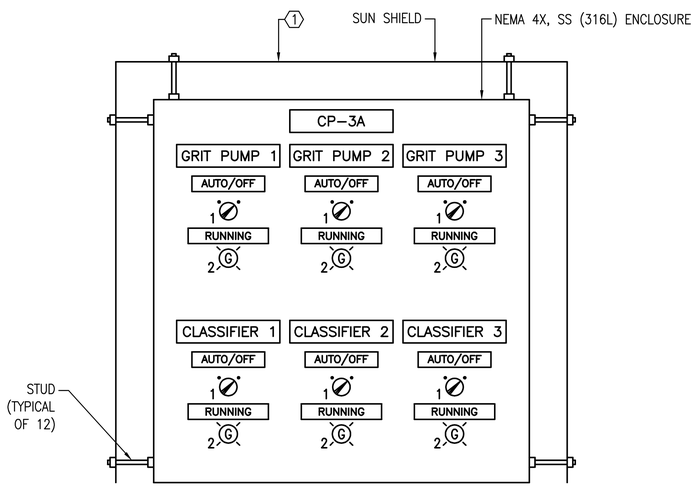

EXTERIOR ELEVATION

A1 GRIT REMOVAL REMOTE CONTROL PANEL ELEVATION – CP-3A

NOT TO SCALE

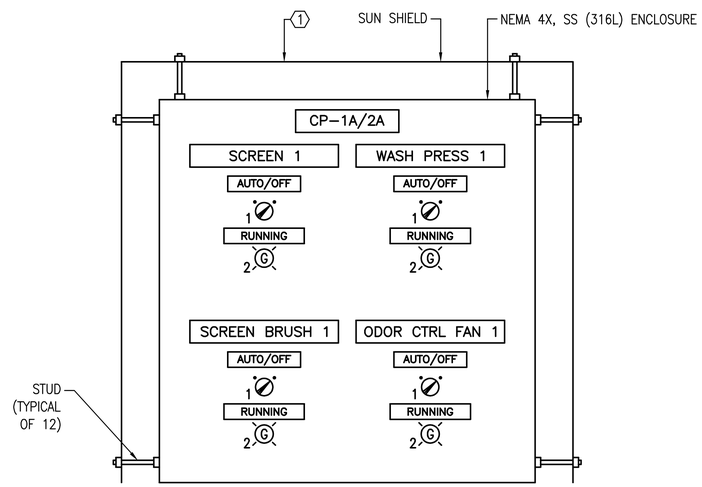

EXTERIOR ELEVATION

A3 SCREENS REMOTE CONTROL PANEL ELEVATION – CP-1A AND CP-2A

NOT TO SCALE

KEY NOTES:

1. PROVIDE ALUMINUM SUNSHIELD AROUND 3 SIDES OF CONTROL PANEL AND OFF-SET A MINIMUM OF 6 INCHES (COORDINATE OFF-SET WITH SIDE MOUNTED DEVICES). SUNSHIELD SHALL BE MADE OF 16 GAUGE ALUMINUM, PAINTED WHITE, AND EXTEND 2" BEYOND FRONT AND BACK OF THE PANEL (TOTAL OF 4" DEEPER IN DIMENSION THAN PANEL). SUNSHIELD SHALL BE ATTACHED USING WELDED STAINLESS STEEL STUDS (5/16" MINIMUM), WASHERS, AND LOCK NUTS WITH RUBBER VIBRATION ISOLATORS. MOUNTING STUDS SHALL BE POSITIONED AT EACH CORNER OF CONTROL PANEL (A TOTAL OF 4 FOR EACH SIDE) AND WELDED TO EXTERIOR OF PANEL AND SHALL NOT PENETRATE CONTROL PANEL ENCLOSURE. SHALL BE NELSON STUD OR ACCEPTED EQUIVALENT.

2. PROVIDE ADDITIONAL INDICATOR LIGHTS, CONTROL SWITCHES, CONTROL BUTTONS, ETC. AS REQUIRED BY MANUFACTURER OF EQUIPMENT WHERE ASPECTS CAN'T BE INTEGRATED INTO HMI SCREEN.

SHEET NOTES:

1. REFER TO DIVISION 16 SPECIFICATIONS AND DWGS: E-010 & E-050 FOR ADDITIONAL REQUIREMENTS.

CONTROL PANEL COMPONENTS:

SYMBOL	DESCRIPTION
1	SELECTOR SWITCH – HEAVY DUTY, OIL TIGHT, 2-POSITION, WITH "AUTO-OFF" LEGEND PLATE. UV & SUNLIGHT RESISTANT.
2	120V LED PILOT LIGHT: UV & SUNLIGHT RESISTANT.

BASKERVILLE-DONOVAN, INC.
INNOVATIVE INFRASTRUCTURE SOLUTIONS
PENSACOLA ■ PANAMA CITY ■ TALLAHASSEE ■ MOBILE
449 WEST MAIN STREET
PENSACOLA, FLORIDA 32502 (850)438-9661
ENGINEERING BUSINESS: EB-0000340

MICHAEL T. RHODES JR., P.E.
FL Reg. Engineer #67597

ECUA BAYOU MARCUS HEADWORKS IMPROVEMENTS

ESCAMBIA COUNTY, FLORIDA

NO.	DATE	APPR.	REVISION/ACTION TAKEN

This drawing is the property of BASKERVILLE-DONOVAN, INC. and not to be reproduced in whole or in part. It is not to be used on any other project and is to be returned upon request.

PROJECT NO: 27941.05
DESIGNED BY: ABK
DRAWN BY: ABK
CHK'D BY: MTR
PROJ. MGR: RWD
DATE: OCTOBER 2012

NOT RELEASED FOR CONSTRUCTION
BY DATE

ELECTRICAL CONTROL PANEL ELEVATIONS

E-051

K:\279\27941.05 - Bayou Marcus\DWG\Electrical\E-050.dwg, Dec 05, 2012 - 4:17:20PM, toverton

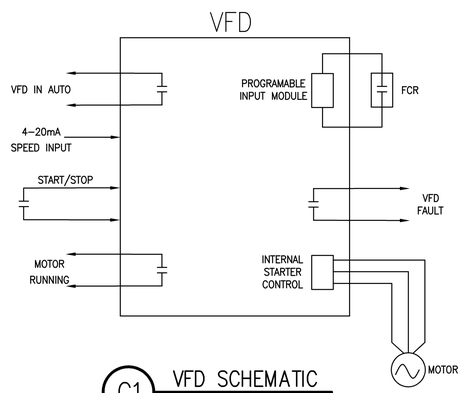

C1 VFD SCHEMATIC
SCALE: NTS

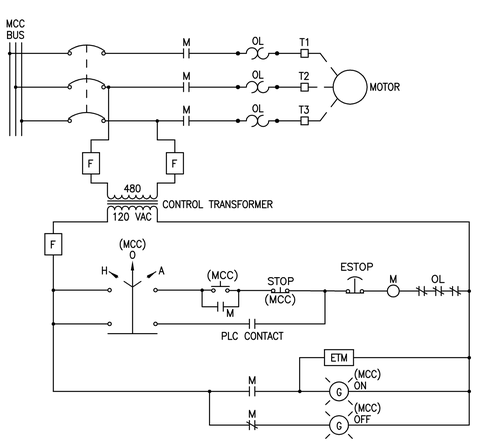

A1 FULL VOLTAGE STARTER SCHEMATIC
SCALE: NTS

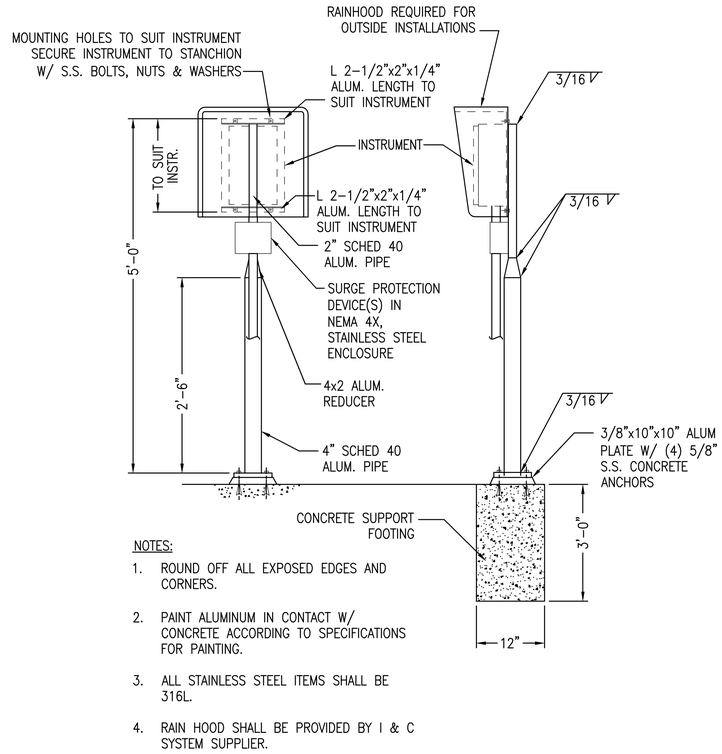

NOTES:

1. ROUND OFF ALL EXPOSED EDGES AND CORNERS.
2. PAINT ALUMINUM IN CONTACT W/ CONCRETE ACCORDING TO SPECIFICATIONS FOR PAINTING.
3. ALL STAINLESS STEEL ITEMS SHALL BE 316L.
4. RAIN HOOD SHALL BE PROVIDED BY I & C SYSTEM SUPPLIER.

C3 TYPICAL STANCHION SUPPORT FOR CASE MOUNTED INSTRUMENTS DETAIL
SCALE: NTS

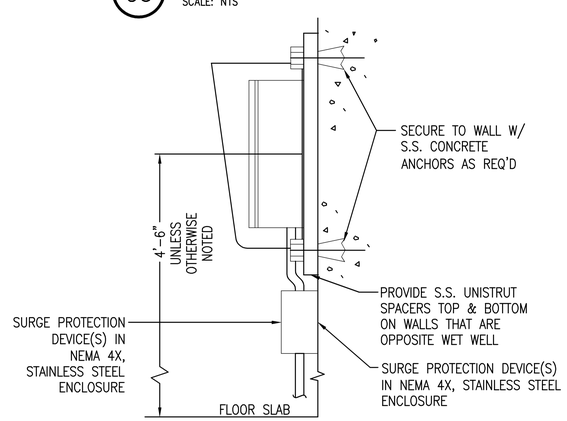

NOTE:

1. INSTALLATION FOR CONCRETE WALL SHOWN. FOR CMU WALL USE S.S. TOGGLE BOLTS IN UN–GROUTED CELLS AND S.S. WEDGE.
2. ALL STAINLESS STEEL ITEMS SHALL BE 316L.
3. RAIN HOOD SHALL BE PROVIDED BY I & C SYSTEM SUPPLIER.

A3 TYPICAL WALL SUPPORT FOR WALL MOUNTED INSTRUMENTS DETAIL
SCALE: NTS

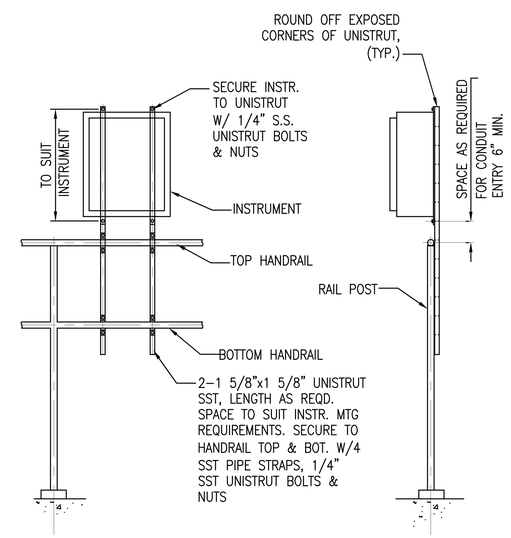

A1 TYP. HANDRAIL MOUNTING FOR CASE MOUNTED INSTRUMENTS
NTS

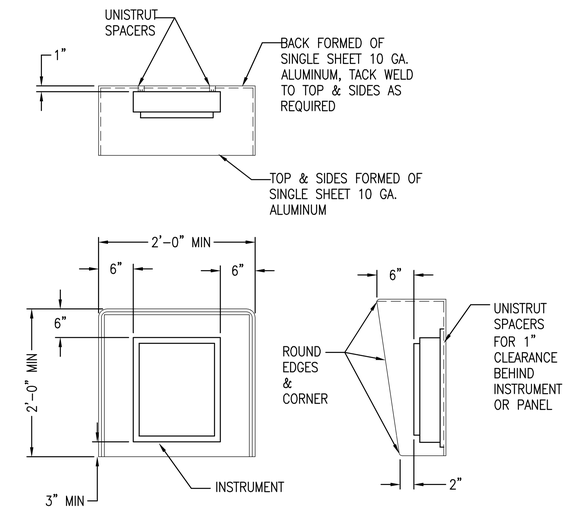

NOTES:

1. ALL EXPOSED EDGES TO BE GROUND SMOOTH AND BURR FREE.
2. MOUNT RAIN HOOD BETWEEN INSTRUMENT AND MOUNTING BRACKET. DRILL HOLES IN RAIN HOOD AS PER MOUNTING HOLES FOR INSTRUMENT OR PANEL.
3. RAIN HOOD SHALL BE PROVIDED BY I & C SYSTEM SUPPLIER.
4. ALL STAINLESS STEEL ITEMS SHALL BE 316L.

C5 TYPICAL RAIN HOOD INSTALLATION DETAIL
SCALE: NTS

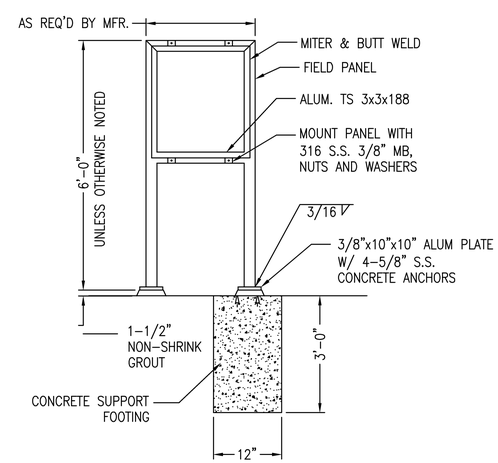

A5 TYPICAL PANEL MOUNTING RACK DETAIL
SCALE: NTS

BASKERVILLE-DONOVAN, INC.
INNOVATIVE INFRASTRUCTURE SOLUTIONS
PENSACOLA ■ PANAMA CITY ■ TALLAHASSEE ■ MOBILE
449 WEST MAIN STREET
PENSACOLA, FLORIDA 32502 (850)438-9661
ENGINEERING BUSINESS: EB-0000340

MICHAEL T. RHODES JR. P.E.
FL Reg. Engineer #67297

ECUA BAYOU MARCUS HEADWORKS IMPROVEMENTS

ESCAMBIA COUNTY, FLORIDA

NO.	DATE	APPR.	REVISION/ACTION TAKEN

This drawing is the property of BASKERVILLE-DONOVAN, Inc. and is not to be reproduced in whole or in part. It is not to be used on any other project and is to be returned upon request.

NOT RELEASED FOR CONSTRUCTION
BY DATE

PROJECT NO: 27941.05
DESIGNED BY: ABK
DRAWN BY: ABK
CHK'D BY: MTR
PROJ. MGR: RWD
DATE: OCTOBER 2012

ELECTRICAL DETAILS

E–902

K:\279\27941.05 – Bayou Marcus\DWG\Electrical\E-900.dwg, Nov 27, 2012 – 11:06:14AM, dmoeller