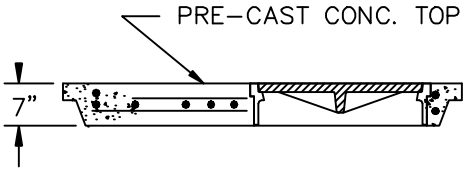

ALTERNATE TOP WITH INVERTED RING

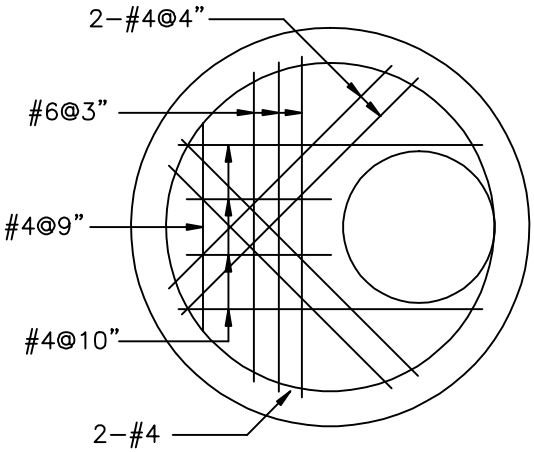

TOP REINFORCING

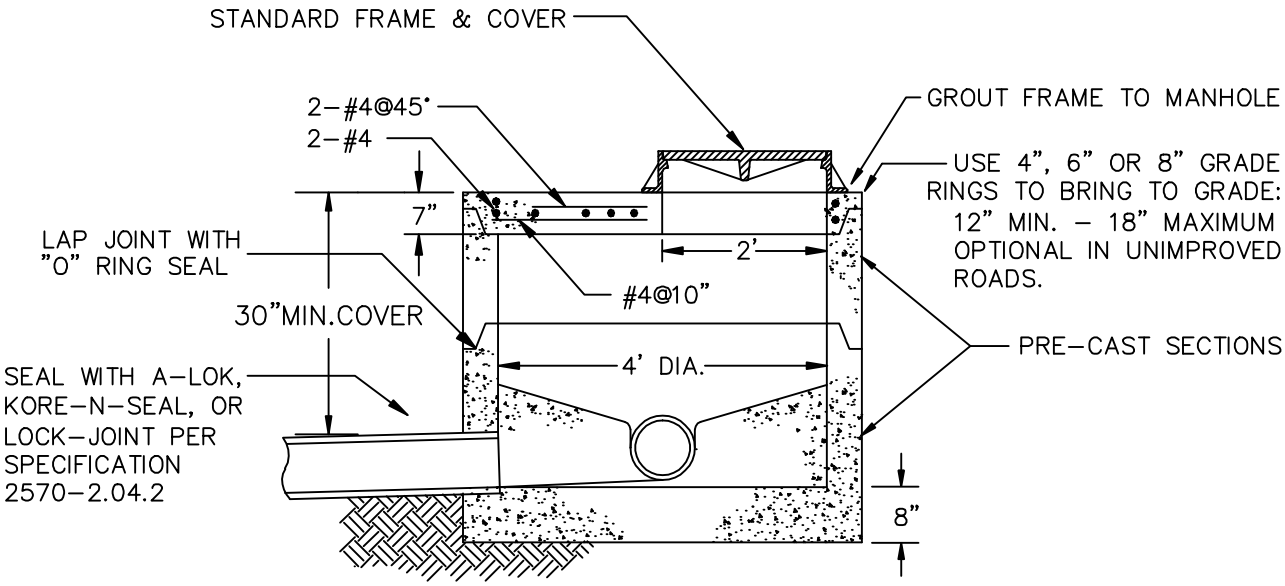

SHALLOW MANHOLE DETAIL

N.T.S.

D-2

DETAIL

DATE: 9-8-95

REV: 6-1-99