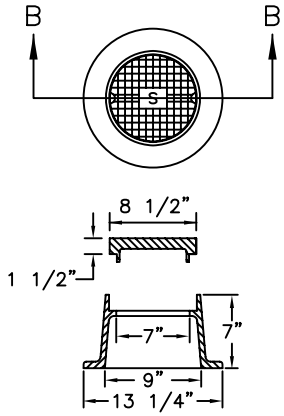

SECTION B – B

LAMPHOLE FRAME AND COVER

NOTES:

1. FRAME AND COVER SHALL BE VULCAN MODEL VM 37, OR U.S. FOUNDARY USF170E, BOLTING FEATURES NOT REQUIRED. MODEL VM 360–WT, FOR BOLTED COVERS, MODEL VM 50 FOR FLOOD AREAS, OR APPROVED EQUIVALENTS, REFER TO SPECIFICATIONS.
2. FRAME AND COVER SHALL CONFORM TO ASTM SPEC. A–48, CLASS 30 CAST IRON.
3. MANHOLE COVER IS TO BE NON–VENTING, EXCEPT WHEN USED ON A RECEIVING MANHOLE FOR A FORCE MAIN, A MANHOLE THAT HAS A DROP MAIN OR LATERAL ENTERING IT, OR A MANHOLE THAT HOUSES AN ARV (SEE DETAIL D–61).

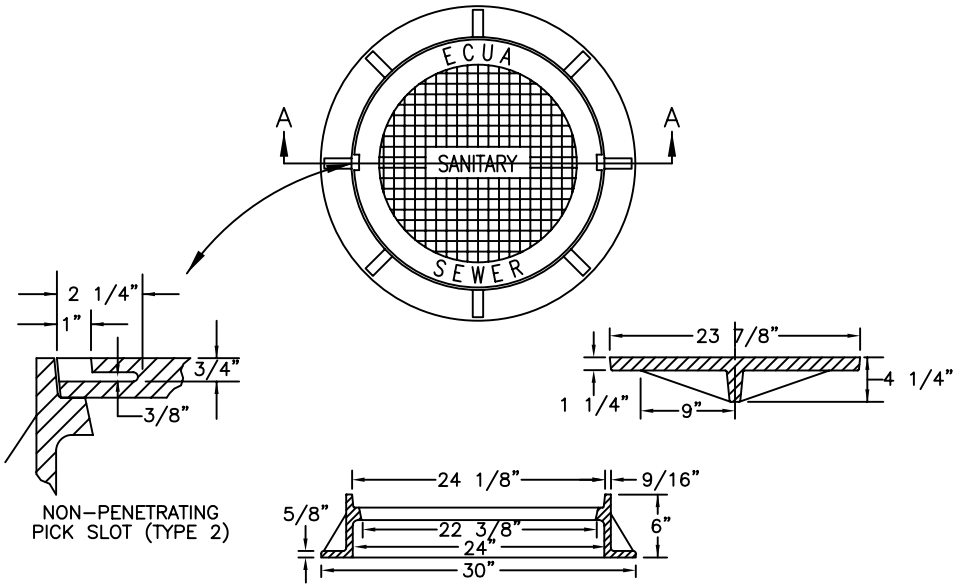

NON–PENETRATING PICK SLOT (TYPE 2)

SECTION A – A

MANHOLE FRAME & COVER

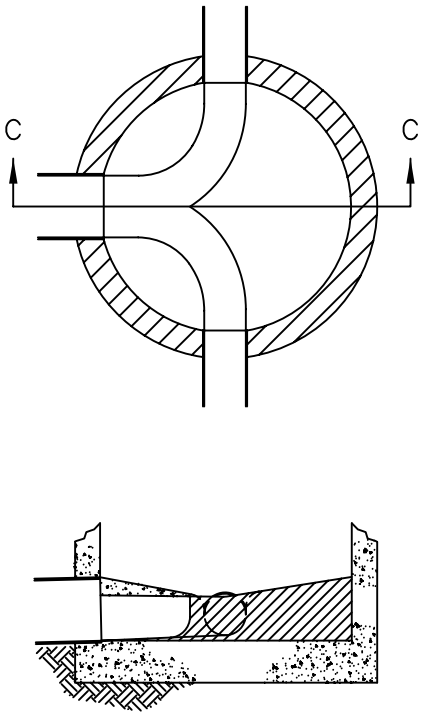

SECTION C – C

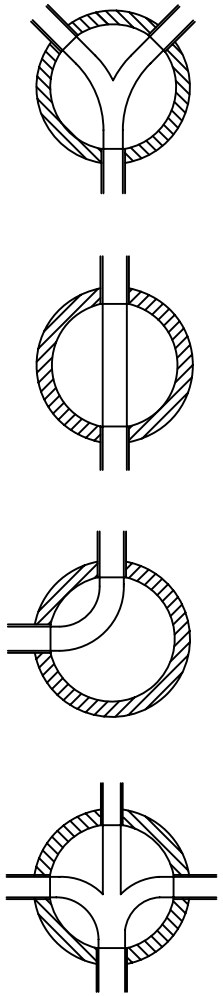

INVERT CHANNELS

EMERALD COAST UTILITIES AUTHORITY

TYPICAL MANHOLE DETAILS

N.T.S.

DATE: 11/87

REV: 6–1–99

D–4

DETAIL