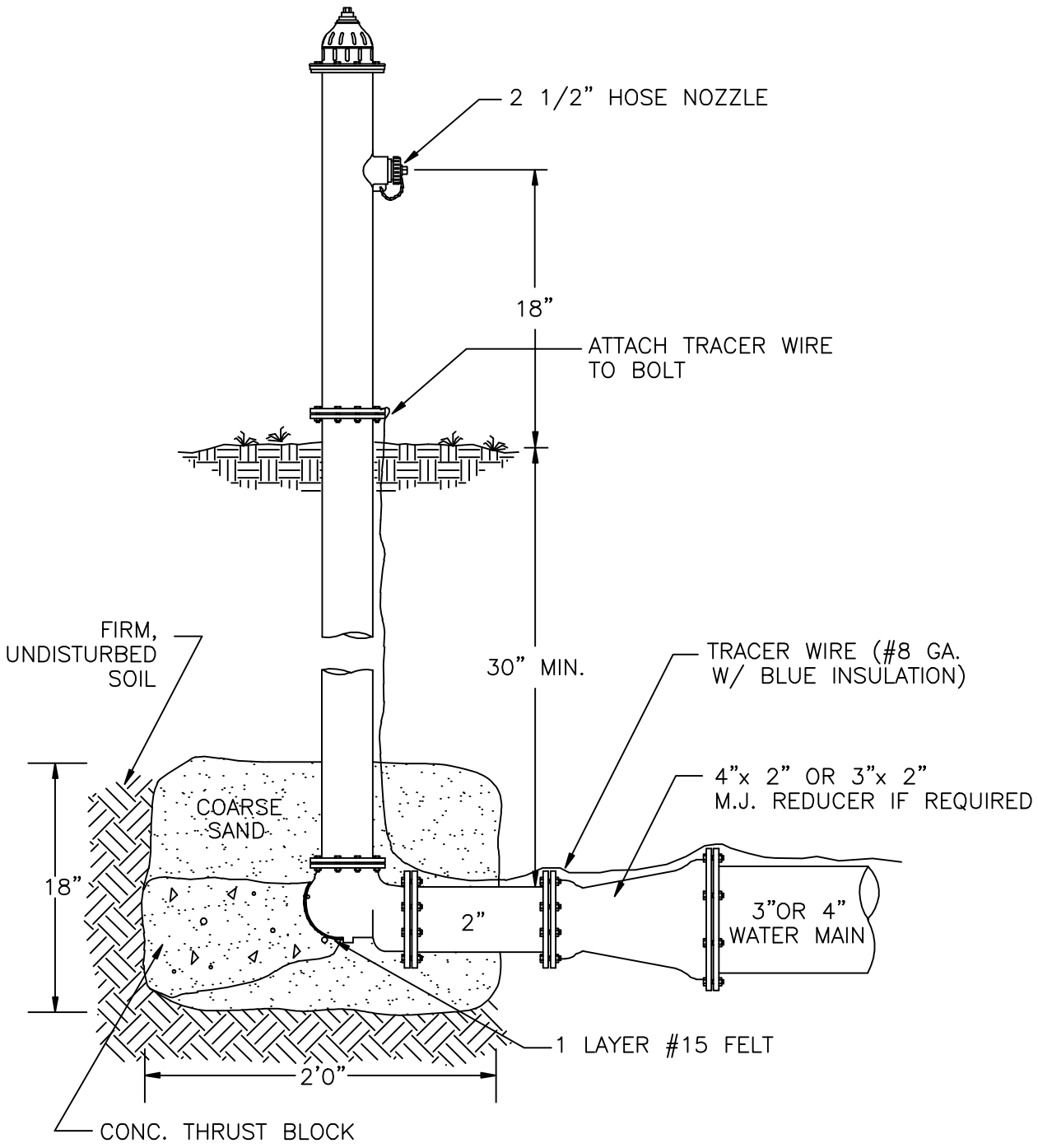

TYPICAL 2" FLUSH HYDRANT

N.T.S.

D-41

DATE: 8-09-95

REV:

DETAIL