ALL WORK SHALL BE CONSTRUCTED IN ACCORDANCE WITH THE LATEST EDITION OF THE E.C.U.A. STANDARD SPECIFICATIONS

480V 3ø 1HP – 15HP FULL VOLTAGE STARTER ELECTRICAL STANDARD – ALTERNATE

FOR

EMERALD COAST UTILITY AUTHORITY ESCAMBIA COUNTY, FL

SHEET NO.	SHEET DESCRIPTION
1	MAIN POWER DISTRIBUTION SCHEMATIC
2	CONTROL SCHEMATIC
3	DIGITAL INPUTS SCHEMATIC
4	DIGITAL OUTPUTS & ANALOG INPUTS SCHEMATIC
5	ANALOG OUTPUTS & STARTER CONTROL SCHEMATIC
6	TERMINAL BLOCK LAYOUT AND FIELD CONNECTIONS
7A	BACK-TO-BACK EXTERIOR PANEL LAYOUT & FIELD CONDUIT REQUIREMENTS
8	POWER & PUMP 1 INTERNAL PANEL LAYOUTS
9	PUMP 2 & CONTROL PANEL INTERNAL LAYOUTS
10	EQUIPMENT LIST
11	HORSEPOWER RELATED EQUIPMENT & POWER CONDUCTORS
12	PANEL TO PANEL CONDUCTORS & EQUIPMENT
13	PANEL TO PANEL WIRING
14A	BACK-TO-BACK STAINLESS STEEL FRAME LAYOUT
15	TABLES, LEGENDS & TAGS
16	ISR INSTRUCTIONS
17	GENERAL NOTES AND DETAILS
18	GENERAL NOTES AND DETAILS

REVISIONS	BY

IMPROVEMENTS TO WASTEWATER COLLECTION SYSTEM

LIFT STATION CONSTRUCTION DETAILS

ELECTRICAL STANDARDS

FINAL SUBMITTAL

EMERALD COAST UTILITIES AUTHORITY

APPROVED BY:

Drawn:
Designed:
Checked:
Date: MAY '13
Scale:
Project No:
Sheet No. 0
Of 18 Sheets

VOLTS	PHASE	FREQ	FLA
480	3	60	XXX
LARGEST MOTOR			
VOLTS	PHASE	FREQ	FLA	HP
480	3	60	XXX	XX
SHORT CIRCUIT CURRENT: 10kA RMS SYMMETRICAL, 480VAC MAXIMUM			

*FOR NAMEPLATE DATA FOR EACH HORSEPOWER RATING SEE SHEET 15 'NAMEPLATE DATA' TABLE

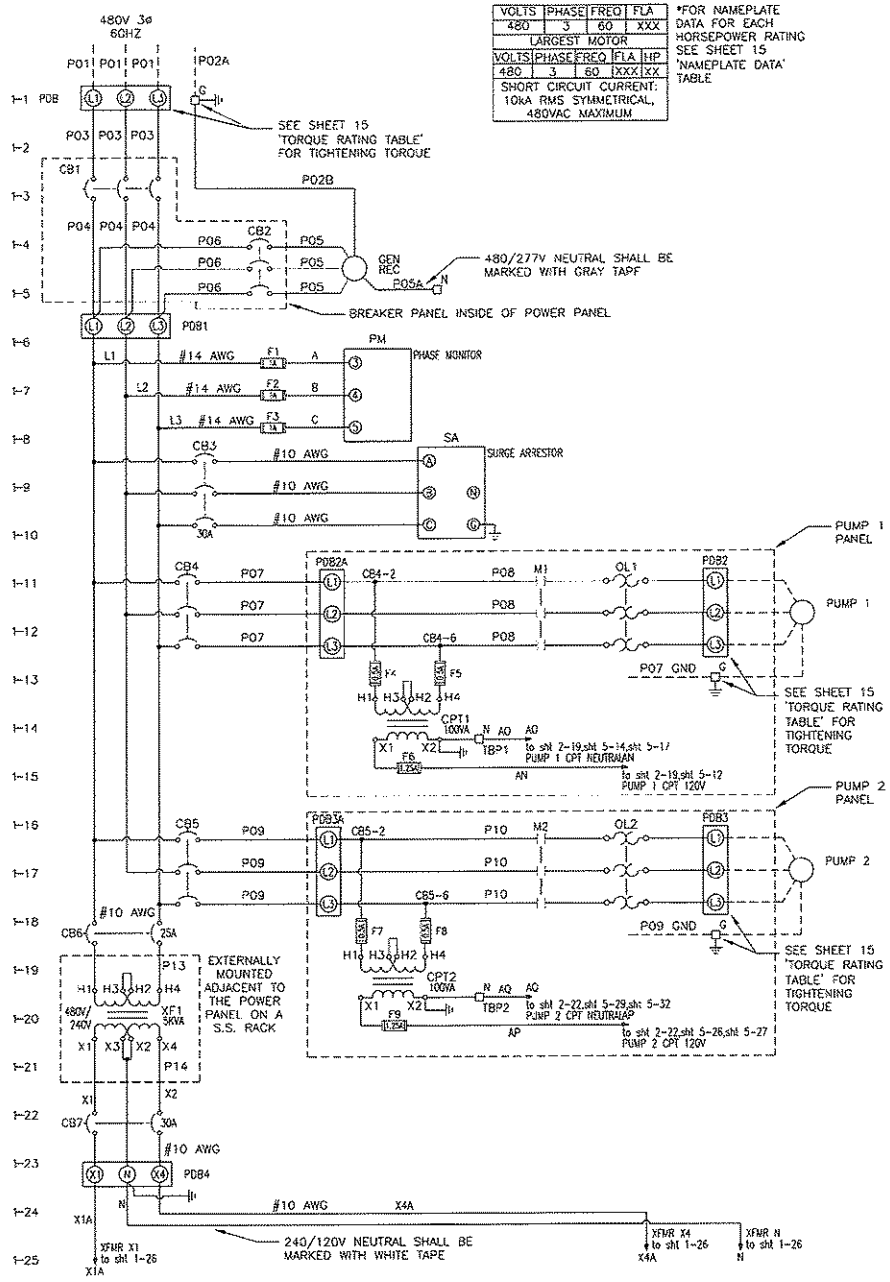

ALL WORK SHALL BE CONSTRUCTED IN ACCORDANCE WITH THE LATEST EDITION OF THE E.C.U.A. STANDARD SPECIFICATIONS

NOTES:

1. THE COMPLETED CONTROL PANEL SHALL BE LABELED AND MANUFACTURED TO MEET U.L. 508A AND 698A CERTIFICATION.
2. CONTROL PANEL WIRING SHALL BE STRANDED COPPER, MINIMUM SIZE #16 AWG WITH 600V 90DEGREE C TYPE THHN INSULATION.
3. CONTROL PANEL WIRING SHALL BE NUMBERED AT BOTH ENDS WITH TYPE WRITTEN, HEAT SHRINKABLE WIRE MARKERS.
4. ALL WIRING WITHIN THE CONTROL PANEL SHALL BE COLOR CODED OR CODED USING ELECTRICAL TAPE IN SIZES WHERE COLORED INSULATION IS NOT AVAILABLE. THE FOLLOWING CODING SHALL BE USED:
   - 4.1. UNGROUNDED AC CONDUCTORS AT SUPPLY VOLTAGE – BLACK
   - 4.2. GROUNDED AC CURRENT CARRYING CONDUCTORS – WHITE
   - 4.3. UNGROUNDED AC CONDUCTORS BELOW SUPPLY VOLTAGE – RED
   - 4.4. UNGROUNDED AC CONTROL CONDUCTORS & CONDUCTORS THAT REMAIN ENERGIZED WHEN THE MAIN DISCONNECT IS OFF – YELLOW
   - 4.5. UNGROUNDED DC CONTROL CONDUCTORS – ORANGE
   - 4.6. GROUNDED DC CURRENT CARRYING CONDUCTORS – BROWN
   - 4.7. INTRINSICALLY SAFE WIRING – BLUE
   - 4.8. GROUND CONDUCTORS – GREEN
5. SEE SHEETS 11 & 12 FOR DETAILS REGARDING ALL POWER CONDUCTORS LABELED PXX.
6. SEE SHEET 11 'HORSEPOWER RELATED COMPONENTS EQUIPMENT LIST' FOR RATINGS OF OVERCURRENT PROTECTION DEVICES.
7. SEE SHEET 6 FOR TERMINAL BLOCK DESIGNATION AND DESCRIPTIONS.

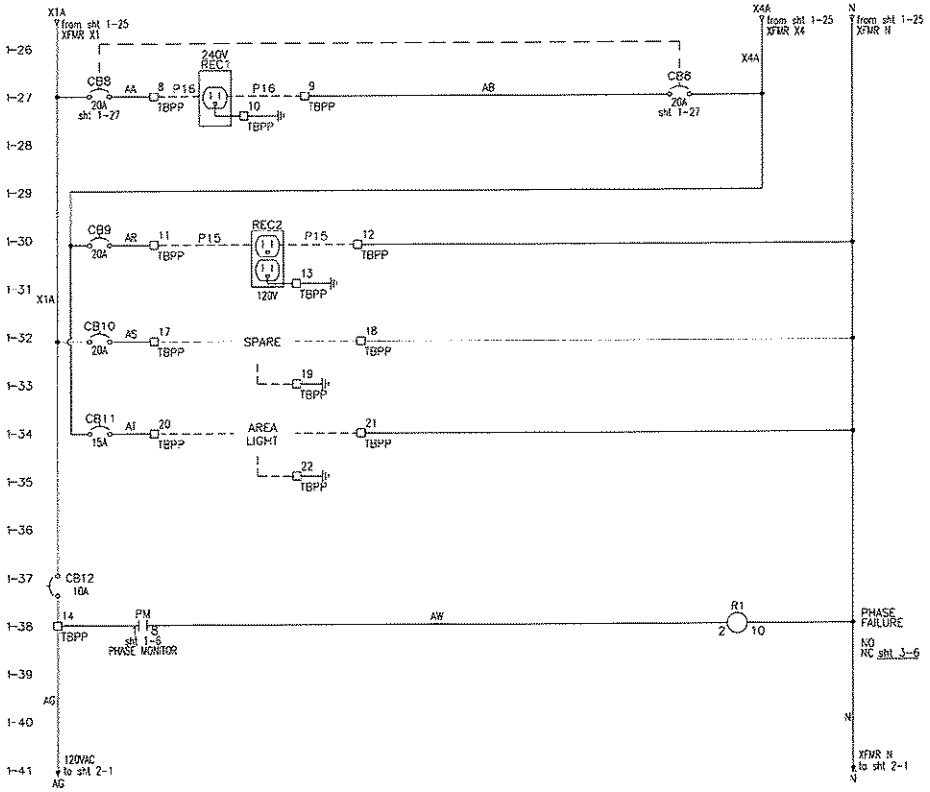

REVISIONS	BY

IMPROVEMENTS TO WASTEWATER COLLECTION SYSTEM

LIFT STATION CONSTRUCTION DETAILS

ELECTRICAL STANDARDS

FINAL SUBMITTAL

EMERALD COAST UTILITIES AUTHORITY

APPROVED BY:

Drawn:	
Designed:	
Checked:	
Date:	MAY '13
Scale:	
Project No:	
Sheet No.	1
	OF 18 Sheets

ALL WORK SHALL BE CONSTRUCTED IN ACCORDANCE WITH THE LATEST EDITION OF THE E.C.U.A. STANDARD SPECIFICATIONS

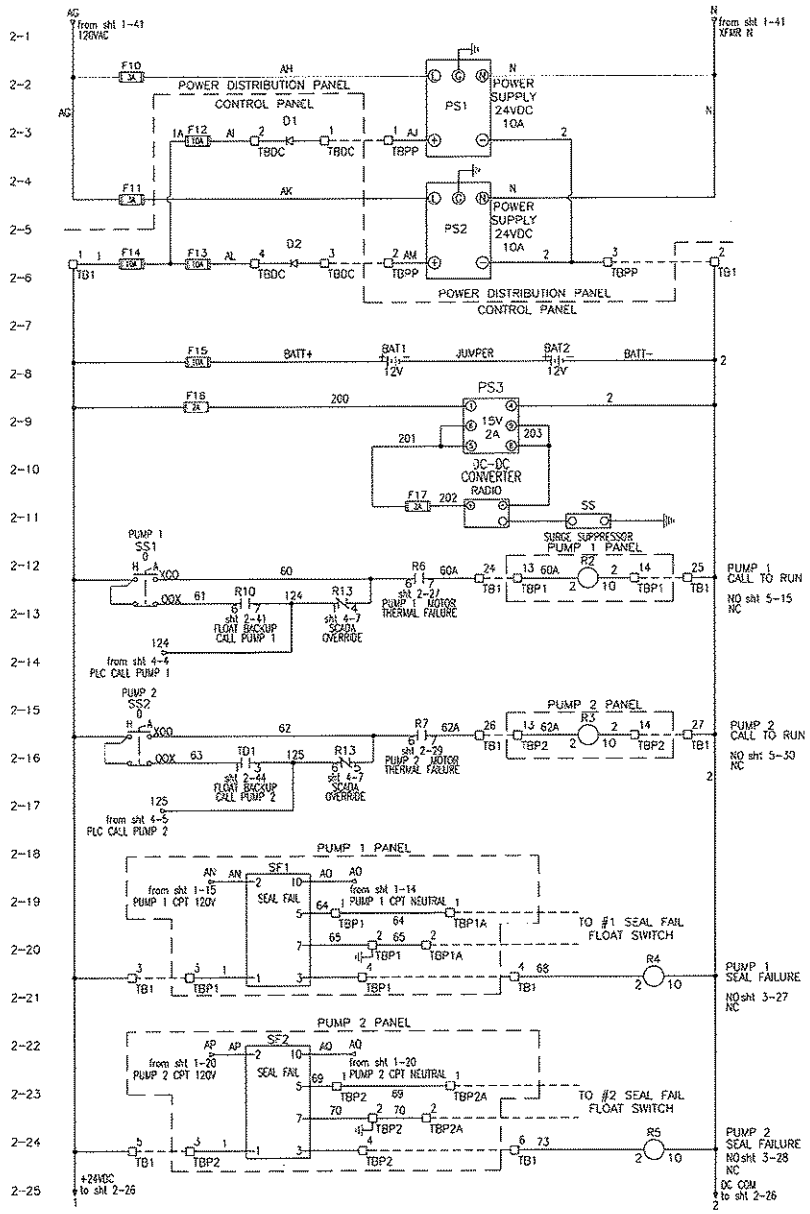

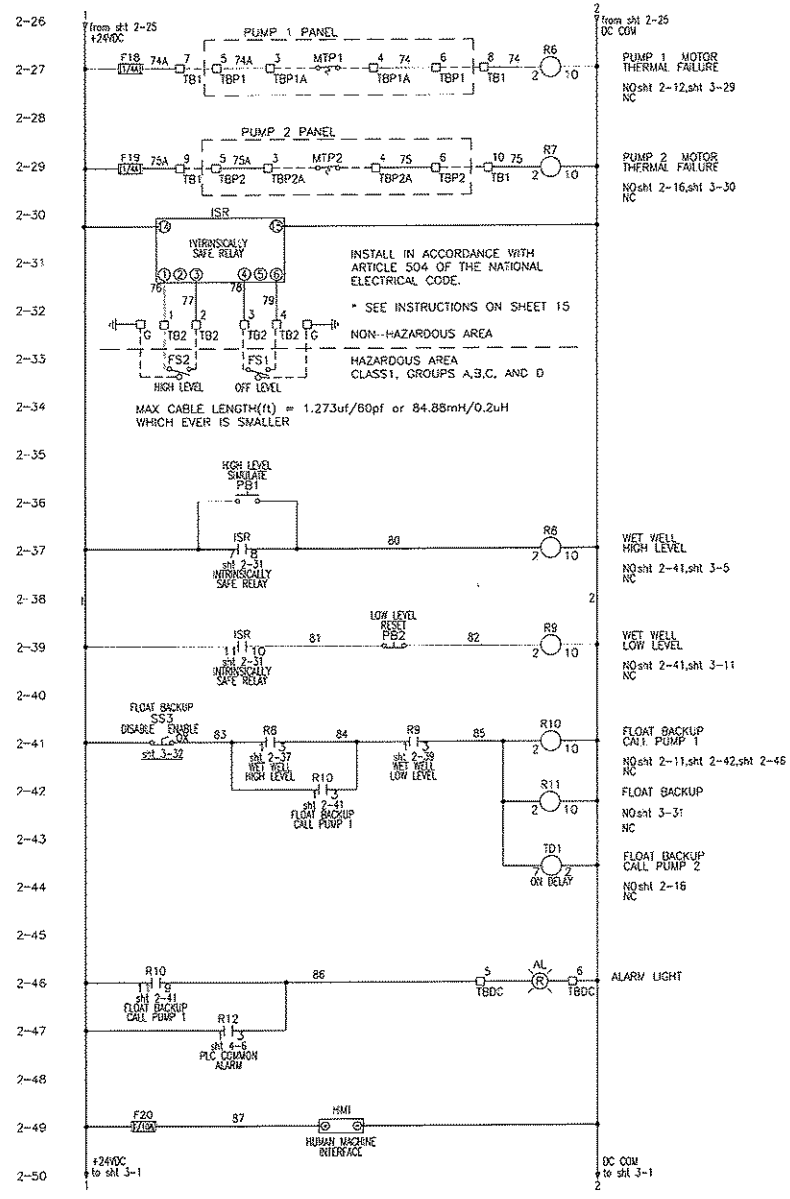

REVISIONS	BY

IMPROVEMENTS TO WASTEWATER COLLECTION SYSTEM

LIFT STATION CONSTRUCTION DETAILS

ELECTRICAL STANDARDS

FINAL SUBMITTAL

EMERALD COAST UTILITIES AUTHORITY

APPROVED BY:

Drawn:	
Designed:	
Checked:	
Date:	MAY '13
Scale:	
Project No:	
Sheet No.	2
	OF 18 Sheets

ALL WORK SHALL BE CONSTRUCTED IN ACCORDANCE WITH THE LATEST EDITION OF THE E.C.U.A. STANDARD SPECIFICATIONS

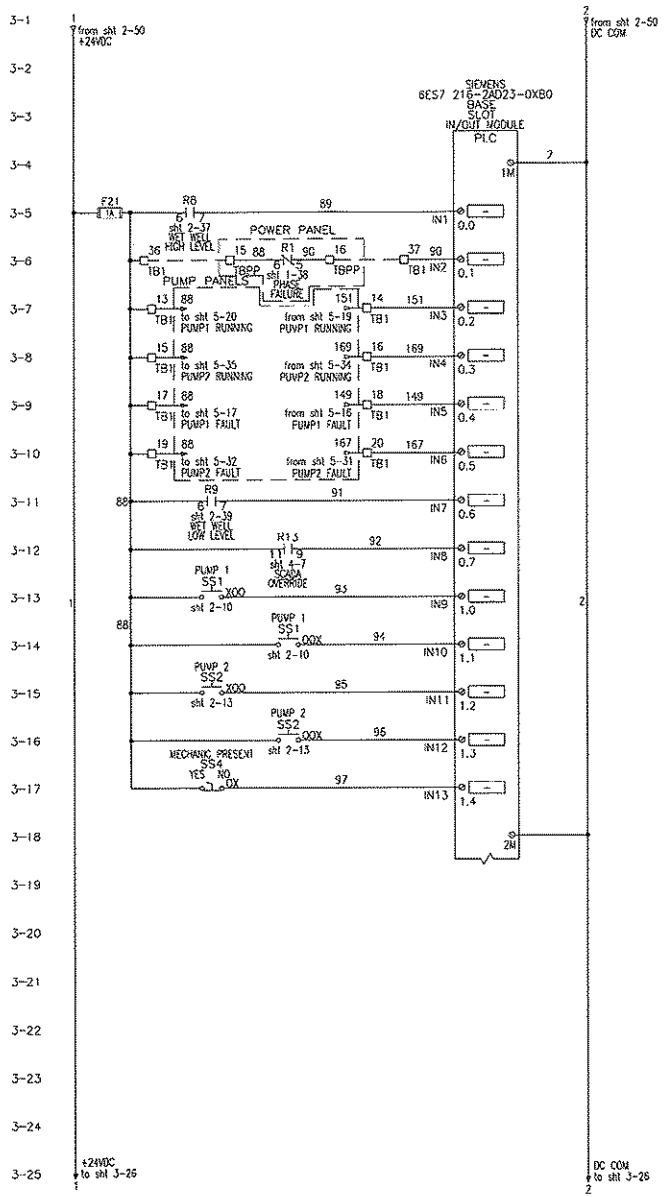

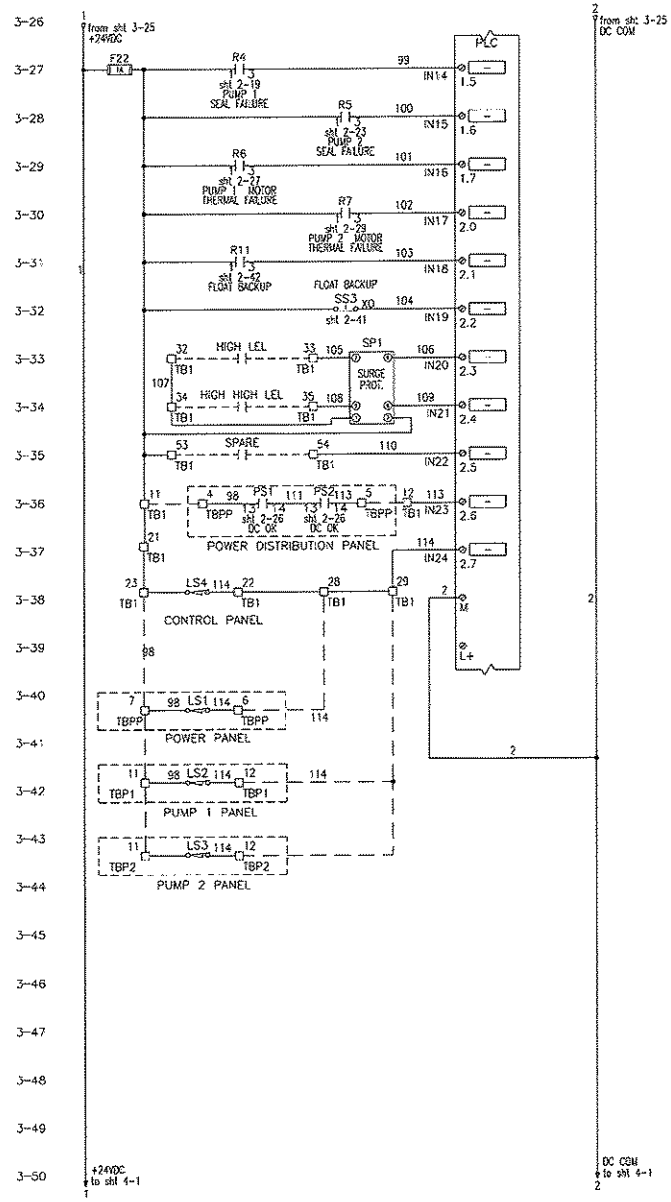

REVISIONS	BY

IMPROVEMENTS TO WASTEWATER COLLECTION SYSTEM

LIFT STATION CONSTRUCTION DETAILS

ELECTRICAL STANDARDS

FINAL SUBMITTAL

EMERALD COAST UTILITIES AUTHORITY

APPROVED BY:

Drawn:	
Designed:	
Checked:	
Date:	MAY '13
Scale:	
Project No:	
Sheet No.	3
	OF 18 Sheets

ALL WORK SHALL BE CONSTRUCTED IN ACCORDANCE WITH THE LATEST EDITION OF THE E.C.U.A. STANDARD SPECIFICATIONS

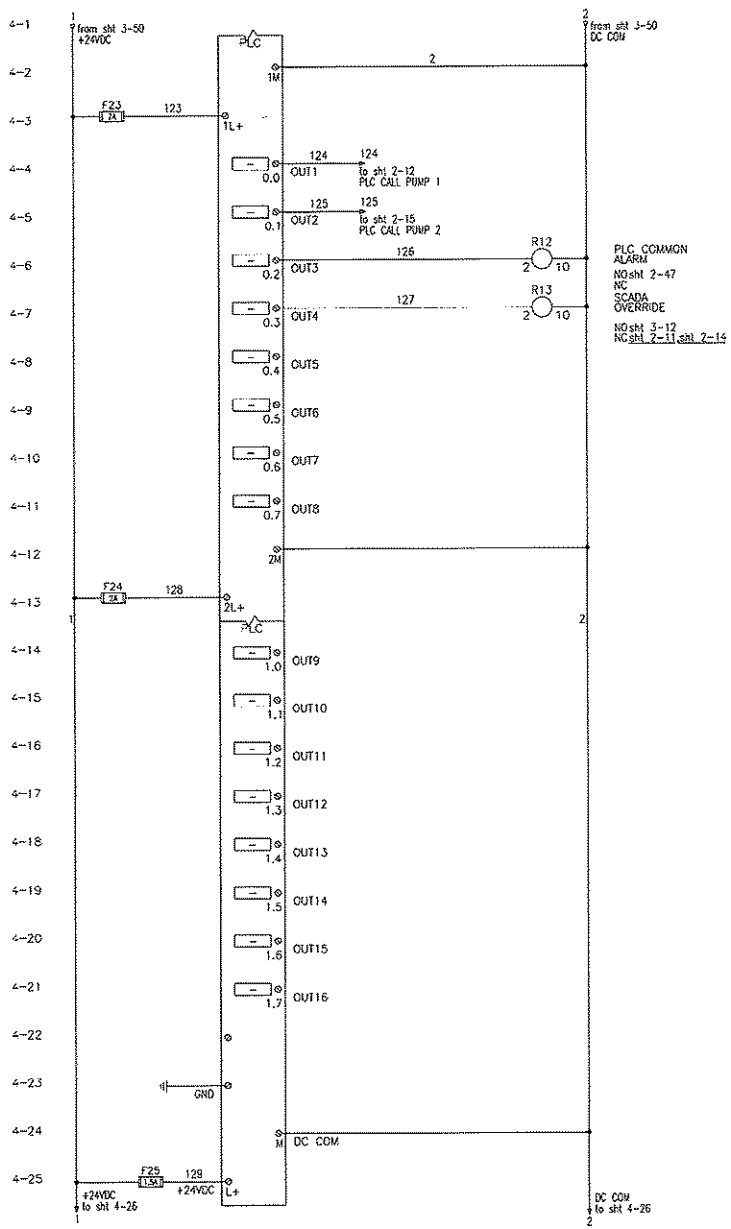

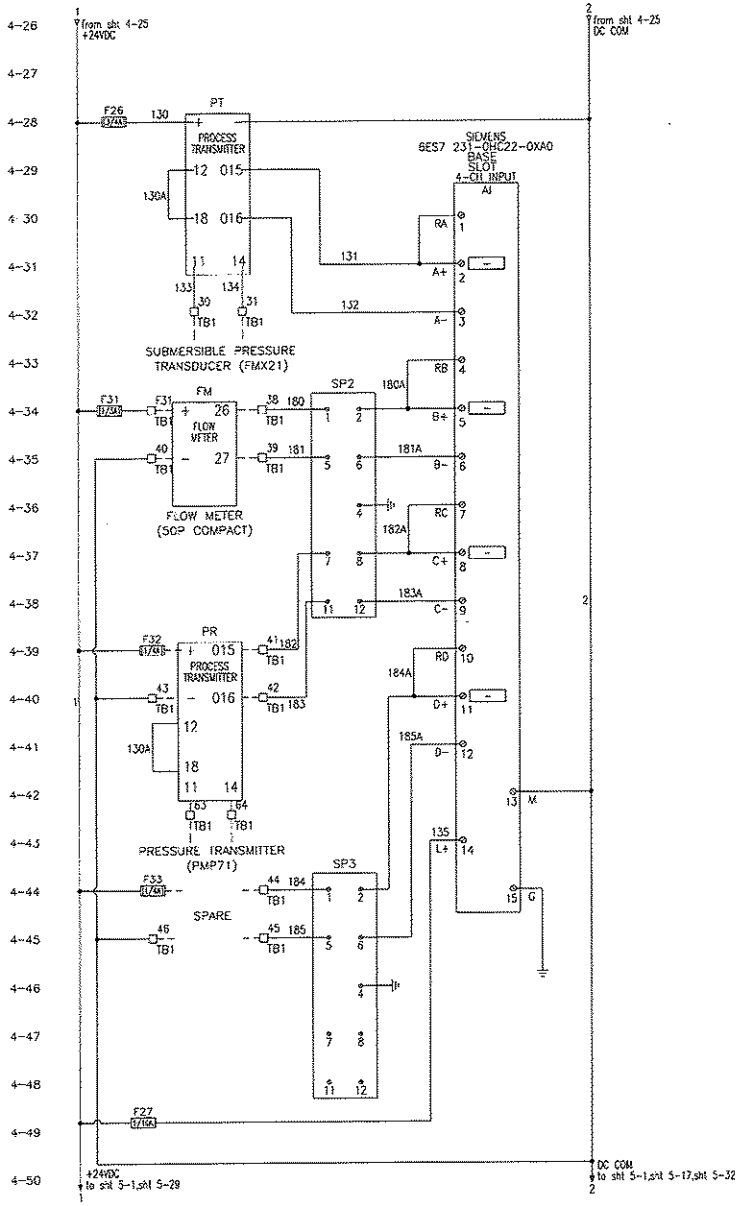

REVISIONS	BY

IMPROVEMENTS TO WASTEWATER COLLECTION SYSTEM

LIFT STATION CONSTRUCTION DETAILS

ELECTRICAL STANDARDS

FINAL SUBMITTAL

EMERALD COAST UTILITIES AUTHORITY

APPROVED BY:

Drawn:	
Designed:	
Checked:	
Date:	MAY '13
Scale:	
Project No:	
Sheet No.	4
	OF 18 Sheets

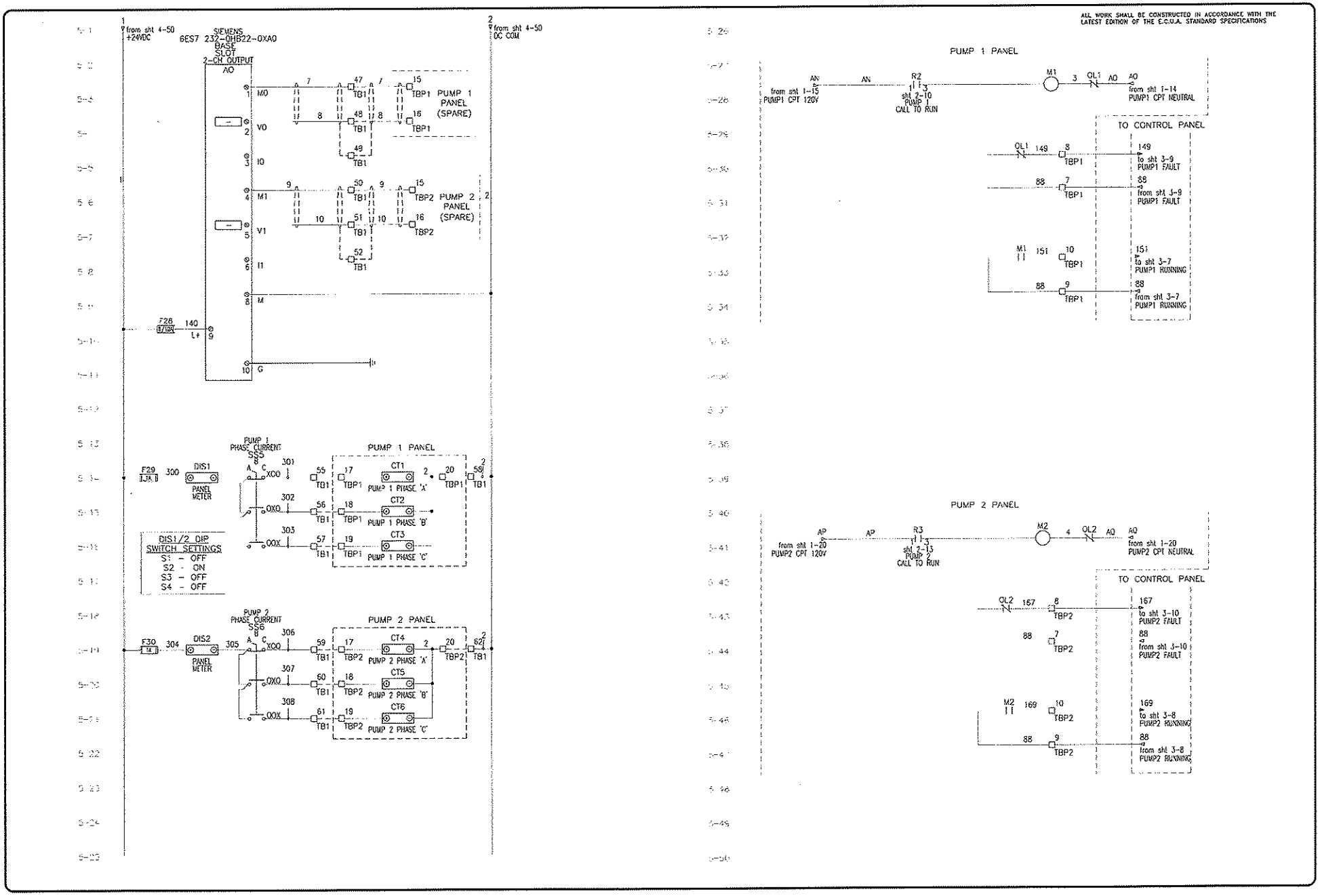

REVISIONS	BY

IMPROVEMENTS TO WASTEWATER COLLECTION SYSTEM

LIFT STATION CONSTRUCTION DETAILS

ELECTRICAL STANDARDS

FINAL SUBMITTAL

EMERALD COAST UTILITIES AUTHORITY

APPROVED BY:

Drawn:
Designed:
Checked:
Date: MAY '13
Scale:
Project No:
Sheet No. 5
Of 18 Sheets

ALL WORK SHALL BE CONSTRUCTED IN ACCORDANCE WITH THE LATEST EDITION OF THE E.C.U.A. STANDARD SPECIFICATIONS

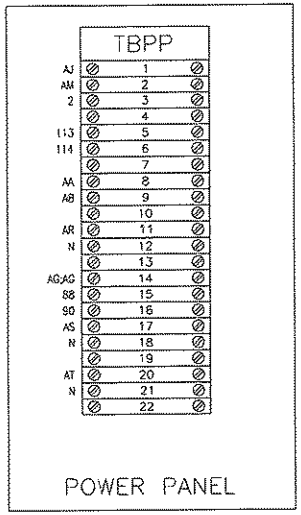

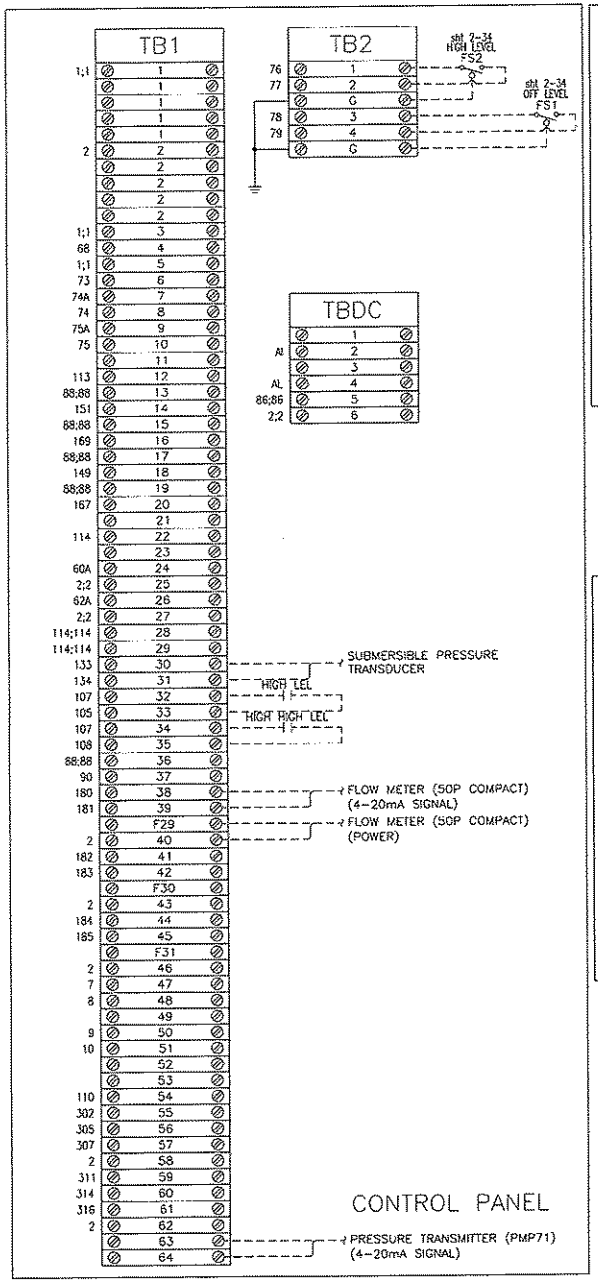

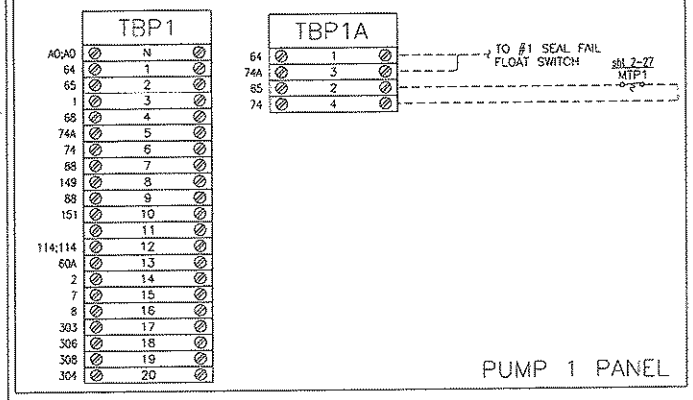

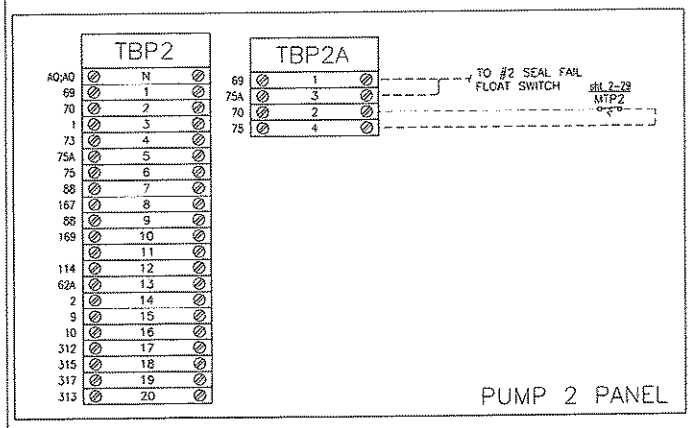

NOTES:

TERMINAL BLOCK DESIGNATIONS:

- TBPP – POWER PANEL TERMINAL BLOCK
- TB1 – CONTROL PANEL TERMINAL BLOCK
- TB2 – INTRINSICALLY SAFE TERMINAL BLOCK
- TBP1 – PUMP 1 TERMINAL BLOCK
- TBP1A – PUMP 1 TERMINAL BLOCK (MOTOR THERMAL AND SEAL FAILURE)
- TBP2 – PUMP 2 TERMINAL BLOCK
- TBP2A – PUMP 2 TERMINAL BLOCK (MOTOR THERMAL AND SEAL FAILURE)

TYPICAL FOR ALL TERMINAL BLOCKS ON THIS DRAWING

USE COPPER CONDUCTORS ONLY
75 DEG C (167 DEG F)
5.3–7.0 LB/IN TIGHTENING TORQUE

REVISIONS	BY

IMPROVEMENTS TO WASTEWATER COLLECTION SYSTEM

LIFT STATION CONSTRUCTION DETAILS

ELECTRICAL STANDARDS

FINAL SUBMITTAL

EMERALD COAST UTILITIES AUTHORITY

APPROVED BY:

Drawn:
Designed:
Checked:
Date: MAY '13
Scale:
Project No:
Sheet No. 6
Of 18 Sheets

ALL WORK SHALL BE CONSTRUCTED IN ACCORDANCE WITH THE LATEST EDITION OF THE E.C.U.A. STANDARD SPECIFICATIONS

NOTES

1. SEE SHEET 15 FOR SCHEDULES, LEGENDS AND PANEL TAGS.

ATTENTION

THIS LAYOUT IS ONE OF TWO (2) POSSIBLE CHOICES - SEE SHEET 7 FOR THE OTHER OPTION. IF THIS LAYOUT OPTION IS SELECTED, SEE SHEET 14A FOR ASSOCIATED RACK DETAILS.

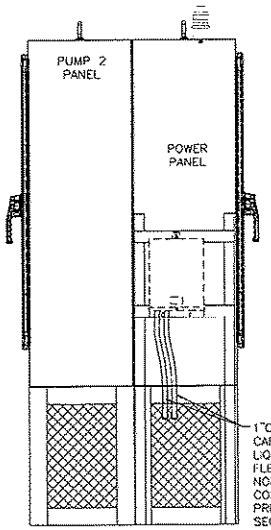

LEFT SIDE

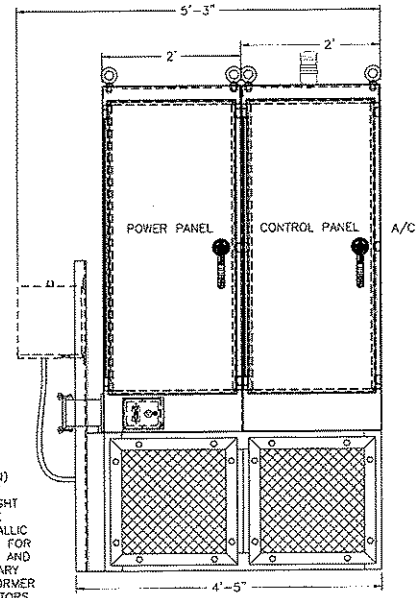

FRONT

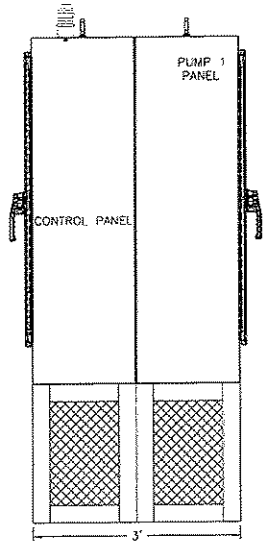

RIGHT SIDE

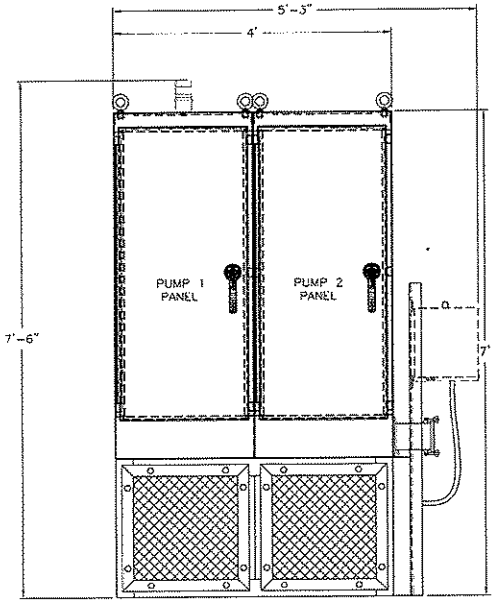

BACK

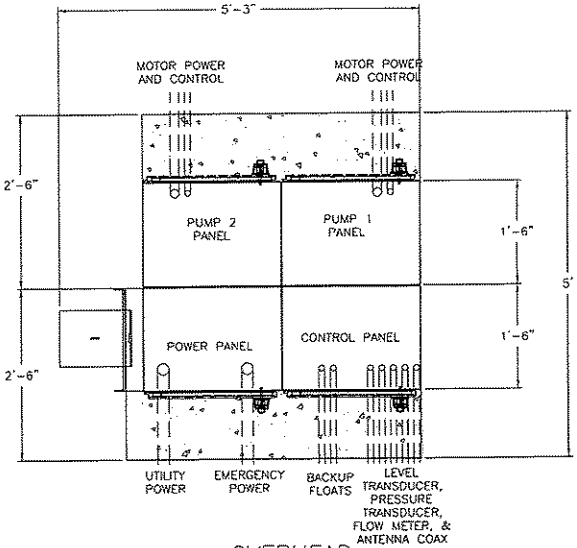

OVERHEAD

REVISIONS	BY

IMPROVEMENTS TO WASTEWATER COLLECTION SYSTEM

LIFT STATION CONSTRUCTION DETAILS

ELECTRICAL STANDARDS

FINAL SUBMITTAL

EMERALD COAST UTILITIES AUTHORITY

APPROVED BY:

Drawn:	
Designed:	
Checked:	
Date:	MAY '13
Scale:	
Project No:	
Sheet No.	7A
	OF 18 Sheets

ALL WORK SHALL BE CONSTRUCTED IN ACCORDANCE WITH THE LATEST EDITION OF THE E.C.U.A. STANDARD SPECIFICATIONS

NOTES

1. SEE SHEET 15 FOR SCHEDULES, LEGENDS AND PANEL TAGS.
2. LAYOUT OF THE POWER & STARTER SECTIONS DEPICTS THE LARGEST POSSIBLE HORSEPOWER CONFIGURATION.

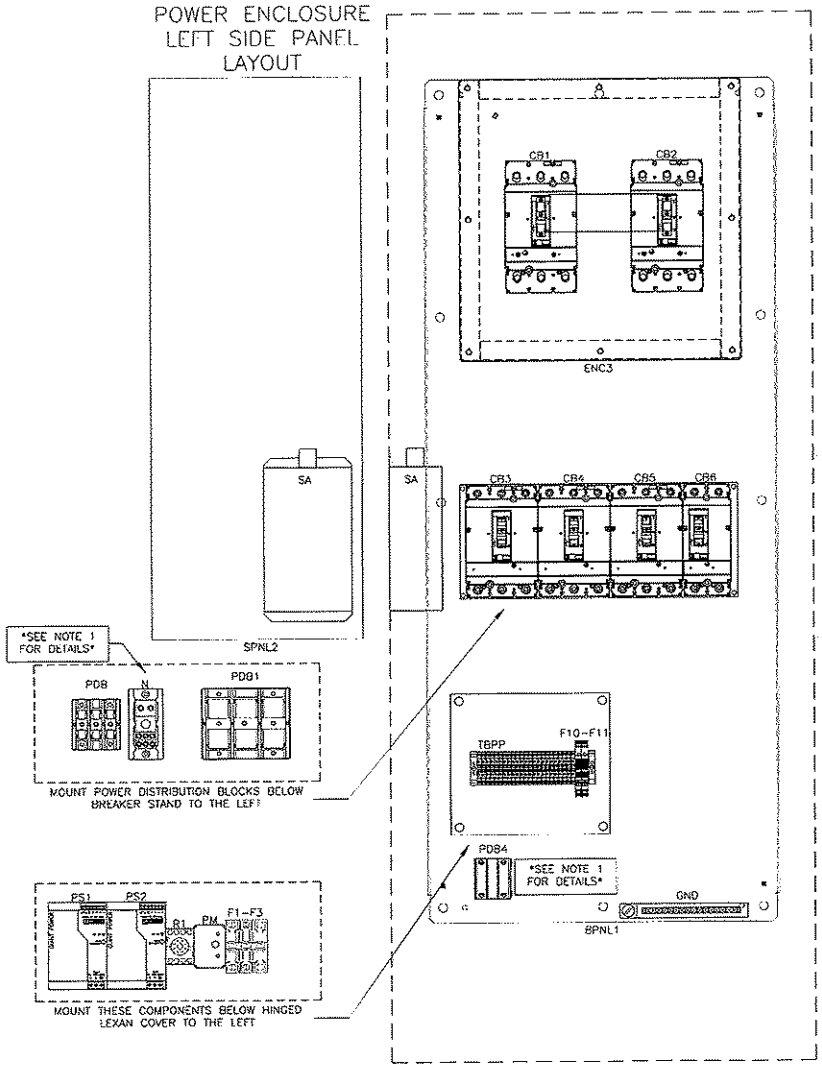

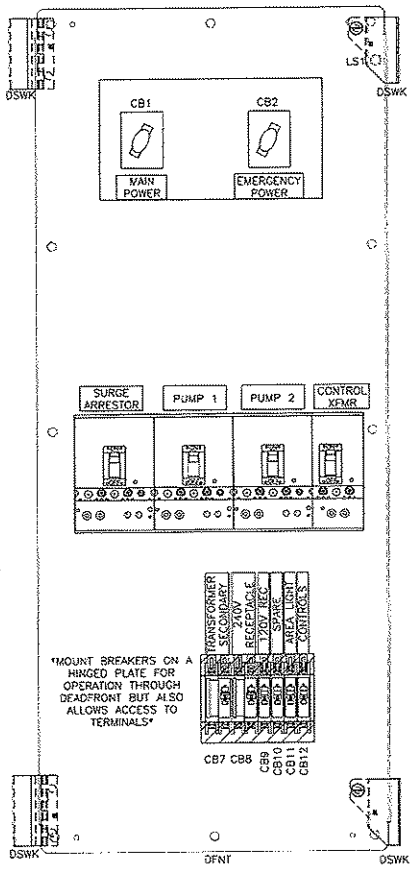

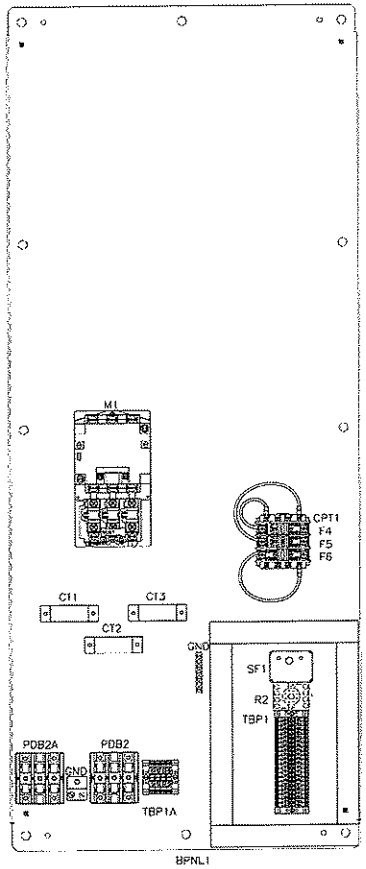

REVISIONS	BY

IMPROVEMENTS TO WASTEWATER COLLECTION SYSTEM

LIFT STATION CONSTRUCTION DETAILS

ELECTRICAL STANDARDS

FINAL SUBMITTAL

EMERALD COAST UTILITIES AUTHORITY

APPROVED BY:

Drawn:
Designed:
Checked:
Date: MAY '13
Scale:
Project No:
Sheet No. 8
OF 18 Sheets

ALL WORK SHALL BE CONSTRUCTED IN ACCORDANCE WITH THE LATEST EDITION OF THE E.C.U.A. STANDARD SPECIFICATIONS

NOTES

1. SEE SHEET 15 FOR SCHEDULES, LEGENDS AND PANEL TAGS.
2. LAYOUT OF THE VFD SECTION DEPICTS THE LARGEST POSSIBLE HORSEPOWER CONFIGURATION.

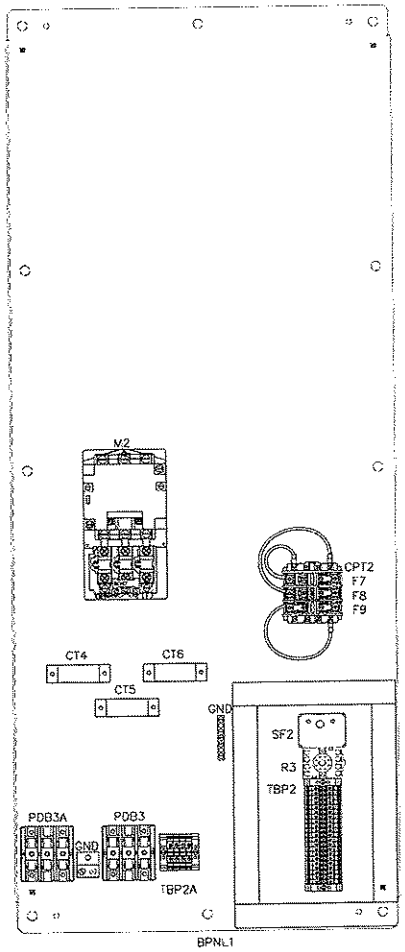

PUMP 2 ENCLOSURE BACKPANEL LAYOUT

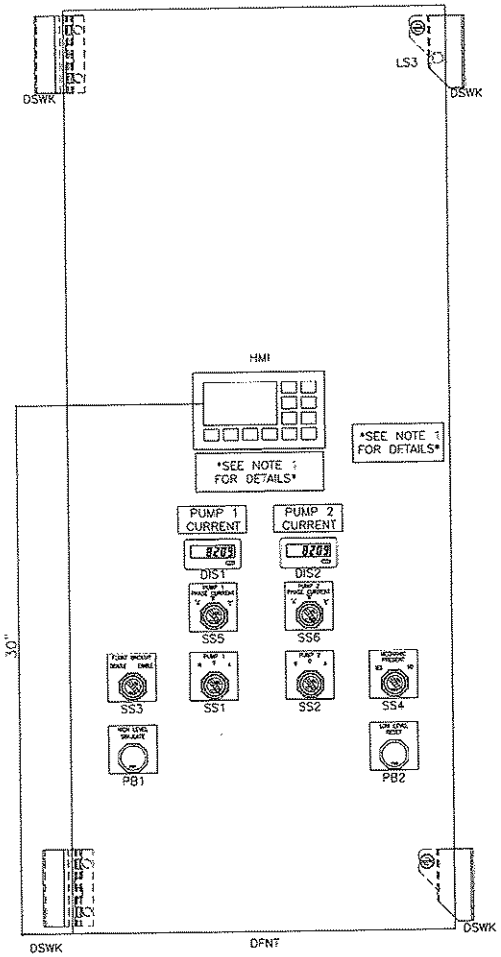

CONTROL PANEL DEADFRONT LAYOUT

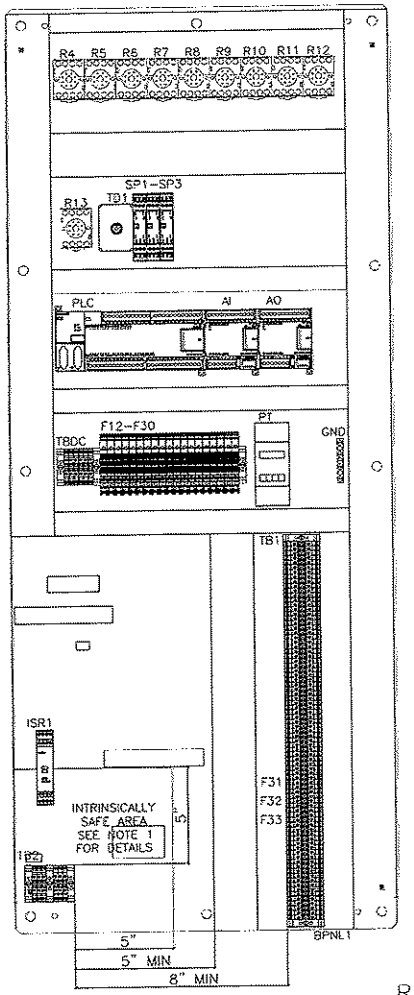

CONTROL ENCLOSURE BACKPANEL LAYOUT

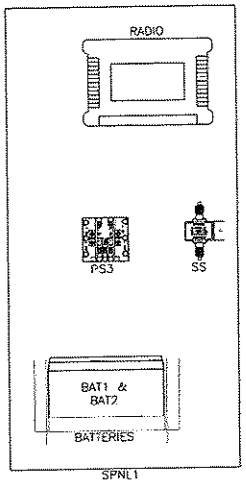

CONTROL ENCLOSURE RIGHT SIDEPANEL LAYOUT

REVISIONS	BY

IMPROVEMENTS TO WASTEWATER COLLECTION SYSTEM

LIFT STATION CONSTRUCTION DETAILS

ELECTRICAL STANDARDS

FINAL SUBMITTAL

EMERALD COAST UTILITIES AUTHORITY

APPROVED BY:

Drawn:	
Designed:	
Checked:	
Date:	MAY '13
Scale:	
Project No:	
Sheet No.	9
	OF 18 Sheets

480V FVNR Equipment List

Item	Tag	Panel	Description	Manufacturer	Model	Qty
1	ENC1	All	60X24X18 NEMA 4X SS Enclosure	Hoffman	A60Z4218SSFSN4	4
2	BPNL1	All	60x24 Painted Steel Backpanel	Hoffman	A60P24F1	4
3	SPNL1	Control	28"H x 12"W Aluminum Sidepanel	EWS	Custom	1
4	DFNT	Power & Control	60x24 Aluminum Deadfront Panel	EWS	Custom	2
5	DSWK	Power & Control	Door Swing Kit	Hoffman	ANADFK	2
6	FRM	All	Expanded Metal Stainless Steel Frame	EWS	SEE DRAWINGS	1
7	PDB	Power	Incoming Power Distribution Block PDB	Square D	9080LBA362101	1
8	PDB	Power	Incoming Power Distribution Block PDB Cover	Square D	9080LB23	1
9	GND	Power	Power Panel Ground Bar	Square D	PK15GTA-L	1
10	ENC3	Power	16"H x 16"W x 8"D Screw Cover Type 3R Enclosure	Hoffman	A16168GSC	1
11	CB1	Power	600V Main Circuit Breaker	Square D	SEE HP TABLE SHEET 11	1
12	CB2	Power	600V Emergency Circuit Breaker	Square D	SEE HP TABLE SHEET 11	1
13	CB1,CB2	Power	Mechanical Interlock for H/J Frame Circuit Breakers	Square D	529369	1
14	CB1,CB2	Power	Door Mounted Rotary Handle for H/J Frame Circuit Breakers	Square D	529338	2
15	GEN REC	Power	NEMA 4X Generator Receptacle	Appleton	ADR1044-RS	1
16	GEN REC	Power	NEMA 4X Generator Plug (Ship Loose)	Appleton	ACP1044CD-RS	1
17	PDB1	Power	Main Power Distribution Block PDB1	Square D	9080LBA363206	1
18	PDB1	Power	Main Power Distribution Block PDB1 Cover	Square D	9080LB33	1
19	F1-F3	Power	3 Pole Rejection type Fuse Block	Bussmann	8C6033PQ	1
20	F1-F3	Power	1A Rejection Type Fuse, Class CC	Bussmann	KTK-R-1	3
21	F1-F3	Power	Fuse Cover	Bussmann	SAMI-7N	3
22	PM	Power	480V Phase Monitor	Timemark	A257B	1
23	PM	Power	480V, 8-Pin Relay Base	ABB	GT08PC	1
24	CB3-CB6	Power	Breaker Stand	EWS	Custom	1
25	CB3	Power	30A 480V 3 Pole Circuit Breaker, Main Surge Arrestor	Square D	HDL36030	1
26	SA	Power	Main Surge Arrestor	SSI	SDLA3N4	1
27	CB4, CB5	Power	600V 3 Pole Circuit Breaker, Starter	Square D	SEE HP TABLE SHEET 11	2
28	CB4, CB5	Power	H & J Frame Circuit Breaker Locking System	Square D	529371	2
29	PDB2A, PDB3A	Pump 1 & 2	Starter Power Distribution Block	Square D	9080LBA362104	2
30	PDB2A, PDB3A	Pump 1 & 2	Starter Power Distribution Block Cover	Square D	9080LB23	2
31	M1, M2	Pump 1 & 2	NEMA Starter	Square D	SEE HP TABLE SHEET 11	2
32	OL1, OL2	Pump 1 & 2	Overload Heaters	Square D	SEE HP TABLE SHEET 11	2
33	OL1, OL2	Pump 1 & 2	Overload Contact, (2) N.C.	Square D	9999-SO5	2
34	GND	Pump 1 & 2	Motor Ground Lug	NSI	2-0T	2
35	PDB2, PDB3	Pump 1, 2 & Control	Motor Power Distribution Block PDB2&3, (1)#14-2/0.....(1)#14-2/0	Square D	9080LBA362101	2
36	PDB2, PDB3	Pump 1 & 2	Motor Power Distribution Block PDB2&3 Cover	Square D	9080LB23	2
37	F4, F5, F7, F8	Pump 1 & 2	1/2A Rejection Type Fuse, VFD CPT Primary	Bussmann	FNQ-R-1/2	4
38	CPT1, CPT2	Pump 1 & 2	480/120V 100VA Transformer	Square D	9070TF100D1	2
39	CPT1, CPT2	Pump 1 & 2	Transformer Finger Safe Cover, VFD CPT Primary	Square D	9070FSC-1	2
40	CPT1, CPT2	Pump 1 & 2	Fuse Puller, VFD CPT	Square D	9070FP-1	2
41	F6, F9	Pump 1 & 2	1-1/4A Fuse, VFD CPT Secondary	Bussmann	FNQ-1-1/4	2
42	CB6	Power	25A 480V 2 Pole Circuit Breaker, XF1 Transformer Primary	Square D	HDL26025	1
43	XF1	Power	5kVA 480V/240-120V Transformer, NEMA 3R Stainless Steel	Square D	S51FSS	1
44	CB7-CB11	Power	Hinged Aluminum Bracked for Mounting 240/120V Circuit Breakers through Deadfront	EWS	Custom	1
45	CB7	Power	30A 240/120V 2 Pole Circuit Breaker, XF1 Transformer Secondary	Square D	QOU230	1
46	PDB4	Power	240V/120V Power Distribution Block PDB4, (1) #14-2 ... (4) #18-10	Square D	9080LBA361104	1
47	CB8	Power	20A, 240V, 2 Pole Circuit Breaker	Square D	QOU220	1
48	REC1	Power	20A, 250V, 6-20R Receptacle	P&S	5872I	1
49	CB9, CB10	Power	20A, 120V 1 Pole Circuit Breaker	Square D	QOU120	2
50	REC2	Power	120V 20A GFCI Duplex Receptacle NEMA5-20R	P&S	2094-I	1
51	REC1, REC2	Power	Custom Receptacle Cover NEMA 4X S.S.	HOFFMAN	HIDRPSS-MOD	1
52	REC1, REC2	Power	3/4 1G AL FD BOX	Appelton	4CS-1/2	2
53	CB11	Power	15A, 120V, 1 Pole Circuit Breaker	Square D	QOU115	1
54	CB12	Power	10A, 120V, 1 Pole Circuit Breaker	Square D	QOU110	1
55	R1	Power	120V 3PDT General Purpose Relay w/ Indicator Lamp	Potter Brumfield	KRPA-14AN-120	1
56	R1-R13, SF1, SF2	All	11 Pin Relay Base	ABB	NOS-11	15
57	F10, F11	Power	Fused Terminal Block w/ 120V Blown Fuse Indication	Allen Bradley	1492-H4	2
58	-	Power & Control	1492-H4 &H5 Fused Terminal Block End Cover	Allen Bradley	1492-N37	2
59	F10, F11	Power	3A Fuse	Bussmann	AGC-3	2
60	PS1, PS2	Power	10A 24VDC Power Supply	Phoenix Contact	2938604	2
61	D1, D2	Power	10A Diode, P1000A	Newark	51R7094	2
62	-	Power	Custom Stand/Lexan Hinged Cover w/Alum Stand for TBPP & Power Supply Fuses	EWS	Custom	1
63	F12-F30	Control	Fused Terminal Block w/ 24VDC Blown Fuse Indication	Allen Bradley	1492-H5	19
64	F12-F15	Control	10A Fuse	Bussmann	AGC-10	4
65	BAT1, BAT2	Control	12VDC Battery	Power Sonic	PS1290	2

480V FVNR Equipment List

ALL WORK SHALL BE CONSTRUCTED IN ACCORDANCE WITH THE LATEST EDITION OF THE E.C.U.A. STANDARD SPECIFICATIONS

Item	Tag	Panel	Description	Manufacturer	Model	Qty
66	PS3	Control	24VDC-15VDC Converter, 2A	Vicor	V1-J12-EY-B1	1
67	RADIO	Control	400MHz Radio	GE MDS	SD04MD	1
68	RADIO	Control	DB9 Male/Male Gender Changer	Office Depot	946660	1
69	RADIO/SS	Control	3 Foot LMR400UF Coaxial Jumper NMale to TNCMale	Tessco	324503	1
70	SS	Control	Coaxial Surge Suppressor, 50-700MHz	Polyphaser	IS-50NX-C1	1
71	-	-	50FT Coaxial Cable, NMale-Nmale, Wireless Solutions 400-07-07-P50 (Ship Loose)	Tessco	370875	1
72	-	-	400MHz Yagi Antenna w/ N Female Connector, MAXRAD MYA450GN (Ship Loose)	Tessci	37634	1
73	-	-	Antenna Tower 5' Base Section, ROHN R-5825G5 (Ship Loose)	Tessco	64559	1
74	-	-	Antenna Tower 10' Mid Section, ROHN R-25G (Ship Loose)	Tessco	55866	1
75	-	-	Antenna Tower 9' Top Section, ROHN R-25AG2 (Ship Loose)	Tessco	70080	1
76	-	-	21' 1-1/4" S.S. Antenna Mast (Ship Loose)	Bell Steel	023009	1
77	F18, F19	Control	1/4A Fuse	Bussmann	AGC-1/4	2
78	F16, F17, F23, F24	Control	2A Fuse	Bussmann	AGC-2	4
79	SS1, SS2	Control	3 Position Selector Switch, 30MM	Square D	9001SKS43BH2	2
80	R2-R13	Control	24VDC 3PDT General Purpose Relay w/ Indicator Lamp	Potter Brumfield	KRPA-14DN-24	12
81	SF1, SF2	Control	120V Seal Failure Relay	ATC	SPM-120-AAA-10K	2
82	ISR1	Control	Intrinsically Safe Barrier Relay, 24VDC	Pepperl & Fuchs	KFD2-SR2-Ex2.W	1
83	TB2	Control	Terminal Block, Blue TB2	Phoenix Contact	3044115	4
84	TB2	Control	Terminal Block, Blue End Barrier, TB2	Phoenix Contact	3047235	1
85	TB2	Control	Ground Terminal Blocks, TB2	Phoenix Contact	3044128	2
86	PB1, PB2	Control	Push Button, Black 1NO 1NC	Square D	9001SKR1BH13	2
87	SS3, SS4	Control	2 Position Selector Switch, 30MM	Square D	9001SK511BH2	2
88	TD1	Control	24VDC 0-180 Second Time Delay Relay	Square D	RE48ATM12MW	1
89	TD1	Control	8 Pin Relay Base	ABB	NOS-8	1
90	AL	Control	24VDC Red Alarm Light	Federal Signal	LP3M-012-048R	1
91	F20, F27, F28	Control	1/10A Fuse	Bussmann	AGC-1/10	3
92	HMI	Control	TD400C Text Display	Siemens	6AV6 640-0AA00-0AX1	1
93	F21, F22, F29, F30	Control	1A Fuse	Bussmann	AGC-1	4
94	PLC	Control	S7-200 Dual Com Port Processor w/ 24 DI & 16 DO Points	Siemens	6ES7 216-2AD23-0XB0	1
95	AI	Control	S7-200 4 Point AI Module	Siemens	6ES7 231-0HC22-0XA0	1
96	AO	Control	S7-200 2 Point AO Moduel	Siemens	6ES7 232-0HB22-0XA0	1
97	PLC	Control	S7-200 Communication cable PC/PP1 RS-232/485	Siemens	6ES7 901-3CB30-0XA0	1
98	SP1-SP3	Control	Plug In DI Surge Suppression, PT 4x1...DC	Phoenix Contact	2838322	3
99	SP1-SP3	Control	Terminal Block Base for Plugable Surge Supression, PT 4x1-BE	Phoenix Contact	2839963	3
100	LS1-LS4	Control	Panel Intrusion Switches, N.C. Contacts	NSI	76030PS	4
101	F25	Control	1-1/2A Fuse, PLC Supply	Bussmann	AGC-1-1/2	1
102	F26	Control	3/4A Fuse, Process Analyzer	Bussmann	AGC-3/4	1
103	PT	Control	Level Transmitter	Endress & Hauser	RMA42AAAM2	2
104	PT	-	Submersible Level Transducer, 20ft Range w/ 60ft Cable & Mounting Clamp (Ship Loose)	Endress & Hauser	FMX21-FE221GGE21APO	1
105	F31-F33	Control	24VDC Fused Terminal Block With Indication	Phoenix Contact	3046090	3
106	F31-F33	Control	1/4A Fuse, Analog Inputs	Bussmann	GMA-250	3
107	TBPP,1,DC,P1, 1A, P2 & 2A	All	Terminal Block, Gray 26-10 AWG Wire	Phoenix Contact	3044102	181
108	TBPP,1,DC,P1, 1A, P2 & 2A	All	Terminal Block End Barrier	Phoenix Contact	3047028	8
109	TBPP,1,DC,P1, 1A, P2 & 2A	All	Terminal Block End Anchor	Phoenix Contact	0800886	17
110	TBP1A, TBP2A	Pump 1 & 2	Terminal Block, Gray 26-8 AWG Wire, TBVFD1A & TBVFD2A	Phoenix Contact	3044131	8
111	GND	Control	Control Panel Ground Bar	Square D	PK5GTA	1
112	-	-	Meter Socket (SHIP LOOSE)	Milbank	UAP9701-RRL	1
113	-	-	Stainless Steel 60" Float (SHIP LOOSE)	Anchor Scientific	P60NO-SST	2
114	-	-	Insulated Ground Neutral (SHIP LOOSE)	Square D	SN400LA	1
115	-	-	Ground Bar Kit (SHIP LOOSE)	Square D	PKDGT1250	1
116	-	-	NEMA 4A S.S. Disconnect (SHIP LOOSE)	Square D	J250DS	1
117	-	-	Antenna Mast Stabilization Plate (Ship Loose)	EWS	Custom	1
118	-	-	Stainless Steel 'U' Bolt, 2" Pole, 5/16" Diameter Bolt w/ 2-1/2" Threads (SHIP LOOSE)			1
119	-	-	5/16" Stainless Steel Flat Washer for 'U' Bolt (SHIP LOOSE)			2
120	-	-	5/16" Stainless Steel Lock Washer for 'U' Bolt (SHIP LOOSE)			2
121	-	-	5/16" Stainless Steel Nut for 'U' Bolt (SHIP LOOSE)			2
122	-	-	Stainless Steel 'U' Bolt, 1/4" Diameter (SHIP LOOSE)			2
123	-	-	1/4" Stainless Steel 1/4" Nut for 'U' Bolt (SHIP LOOSE)			4
124	-	-	1-1/4" Reduction Bushing for Antenna Tower, ROHN R-TB50 (SHIP LOOSE)	Tessco	36882	1
125	PLC	Control	S7-200 Memory Module	Siemens	6ES7 2918GF230AX0	1
126	N	Power	Generator Neutral Block, (1)#6-400kcmil ... (6)#14-2	Square D	9080LBA163106	1
127	N	Power	Generator Neutral Block Cover	Square D	9080LB31	1
128	SPNL2	Power	32"X12" Aluminum Sidepanel	EWS	Custom	1
129	CT1-CT6	Pump 1 & 2	Current Transducer; 4-20mA; 10, 20 or 50A Range; Loop Powered	NK Technologies	AT1-420-24L-FF	6
130	DIS1, DIS2	Control	4 Digit Loop Powered Process Indicator; 4-20mA	Red Lion	CUB4LP60	2
131	SS5, SS6	Control	3 Position Selector Switch, 30MM	Square D	9001SK468H2	2
132	FM	Control	Flow Meter	Endress & Hauser	50P Compact	1
133	PR	Control	Pressure Transmitter	Endress & Hauser	PMP71-AAC1PG1RAA	1

REVISIONS	BY

IMPROVEMENTS TO WASTEWATER COLLECTION SYSTEM

LIFT STATION CONSTRUCTION DETAILS

ELECTRICAL STANDARDS

FINAL SUBMITTAL

ECUA EMERALD COAST UTILITIES AUTHORITY

APPROVED BY:

Drawn:
Designed:
Checked:
Date: MAY '13
Scale:
Project No:
Sheet No. 10
OF 18 Sheets

ALL WORK SHALL BE CONSTRUCTED IN ACCORDANCE WITH THE LATEST EDITION OF THE E.C.U.A. STANDARD SPECIFICATIONS

Horsepower Related Compontents Equipment List								
Item	Tag	Horsepower						
		1	2	3	5	7.5	10	15
Main Circuit Breaker	CB1	HDL36030	HDL36030	HDL36030	HDL36040	HDL36045	HDL36050	HDL36080
Emergency Circuit Breaker	CB2	HDL36030	HDL36030	HDL36030	HDL36040	HDL36045	HDL36050	HDL36080
Starter Circuit Breaker	CB4,CB5	HDL36015	HDL36015	HDL36015	HDL36015	HDL36020	HDL36025	HDL36040
480V 3 Phase FVNR Starter	M1, M2	8536SAO12V02	8536SAO12V02	8536SBO12V02	8536SBO12V02	8536SCO12V02	8536SCO12V02	8536SDO12V02
Overloads	OL1, OL2	B3.00	B4.85	B6.90	B11.5	B17.5	B25	B32

Horsepower Related Power Conductors, CGB's and Hubs								
Conductor Tag		Horsepower						
		1	2	3	5	7.5	10	15
P-01, P-03 & P-04	Description	(3)#10	(3)#10	(3)#10	(3)#8	(3)#8	(3)#8	(3)#4
	Manufacturer	N/A	N/A	N/A	N/A	N/A	N/A	N/A
	Catalog #	N/A	N/A	N/A	N/A	N/A	N/A	N/A
	Length (Max Ft)	N/A	N/A	N/A	N/A	N/A	N/A	N/A
	Cable Dia (in)	0.164"	0.164"	0.164"	0.216"	0.216"	0.216"	0.324"
	Appleton Connector	(3) -CG-1275	(3) -CG-1275	(3) -CG-1275	(3) -CG-1850	(3) -CG-1850	(3) -CG-1850	(3) -CG-3150
	Connector Range	0.125"-0.250"	0.125"-0.250"	0.125"-0.250"	0.187"-0.312"	0.187"-0.312"	0.187"-0.312"	0.312"-0.437"
	Meyers Hub	(3) 3/4" - STA-2	(3) 3/4" - STA-2	(3) 3/4" - STA-2	(3) 1/2" - STA-1	(3) 1/2" - STA-1	(3) 1/2" - STA-1	(3) 1/2" - STA-1
P-02A	Description	(1)#10	(1)#10	(1)#10	(1)#10	(1)#10	(1)#10	(1)#8
	Manufacturer	N/A	N/A	N/A	N/A	N/A	N/A	N/A
	Catalog #	N/A	N/A	N/A	N/A	N/A	N/A	N/A
	Length (Max Ft)	N/A	N/A	N/A	N/A	N/A	N/A	N/A
	Cable Dia (in)	0.164"	0.164"	0.164"	0.164"	0.164"	0.164"	0.216"
	Appleton Connector	(1)-GC-1250	(1)-GC-1250	(1)-GC-1250	(1)-GC-1250	(1)-GC-1250	(1)-GC-1250	(1)-GC-1850
	Connector Range	0.125"-0.187"	0.125"-0.187"	0.125"-0.187"	0.125"-0.187"	0.125"-0.187"	0.125"-0.187"	0.187"-0.312"
	Hub	(1) 1/2" - STA-1	(1) 1/2" - STA-1	(1) 1/2" - STA-1	(1) 1/2" - STA-1	(1) 1/2" - STA-1	(1) 1/2" - STA-1	(1) 1/2" - STA-1
P-02B	Description	(1)#10	(1)#10	(1)#10	(1)#10	(1)#10	(1)#10	(1)#8
	Manufacturer	Southwire	Southwire	Southwire	Southwire	Southwire	Southwire	Southwire
P-05 & P-06	Description	(3)#10	(3)#10	(3)#10	(3)#8	(3)#8	(3)#8	(3)#4
	Manufacturer	Southwire	Southwire	Southwire	Southwire	Southwire	Southwire	Southwire
	Catalog #	N/A	N/A	N/A	N/A	N/A	N/A	N/A
	Length (Max Ft)	N/A	N/A	N/A	N/A	N/A	N/A	N/A
	Cable Dia (in)	0.164"	0.164"	0.164"	0.216"	0.216"	0.216"	0.324"
	Appleton Connector	(3) -CG-1275	(3) -CG-1275	(3) -CG-1275	(3) -CG-1850	(3) -CG-1850	(3) -CG-1850	(3) -CG-3150
	Connector Range	0.125"-0.250"	0.125"-0.250"	0.125"-0.250"	0.187"-0.312"	0.187"-0.312"	0.187"-0.312"	0.312"-0.437"
	Hub	(3) 3/4" - STA-2	(3) 3/4" - STA-2	(3) 3/4" - STA-2	(3) 1/2" - STA-1	(3) 1/2" - STA-1	(3) 1/2" - STA-1	(3) 1/2" - STA-1
P-07 & P-09	Description	(3)#14 W/G, TC	(3)#14 W/G, TC	(3)#14 W/G, TC	(3)#14 W/G, TC	(3)#14 W/G, TC	(3)#14 W/G, TC	(3)#10 W/G, TC
	Manufacturer	Houston Wire	Houston Wire	Houston Wire	Houston Wire	Houston Wire	Houston Wire	Houston Wire
	Catalog #	HW151 1403G	HW151 1403G	HW151 1403G	HW151 1403G	HW151 1403G	HW151 1403G	HW151 1003G
	Length (Max Ft)	19 FT	19 FT	19 FT	19 FT	19 FT	19 FT	19 FT
	Cable Dia (in)	0.364"	0.364"	0.364"	0.364"	0.364"	0.364"	0.447"
	Appleton Connector	(2) -CG-3150	(2) -CG-3150	(2) -CG-3150	(2) -CG-3150	(2) -CG-3150	(2) -CG-3150	(2) -CG-3750
	Connector Range	0.312"-0.437"	0.312"-0.437"	0.312"-0.437"	0.312"-0.437"	0.312"-0.437"	0.312"-0.437"	0.375"-0.500"
	Hub	(2) 1/2" - STA-1	(2) 1/2" - STA-1	(2) 1/2" - STA-1	(2) 1/2" - STA-1	(2) 1/2" - STA-1	(2) 1/2" - STA-1	(2) 1/2" - STA-1
P-08 & P-10	Description	(3)#14	(3)#14	(3)#14	(3)#14	(3)#14	(3)#14	(3)#10
	Manufacturer	Southwire	Southwire	Southwire	Southwire	Southwire	Southwire	Southwire

REVISIONS	BY

IMPROVEMENTS TO WASTEWATER COLLECTION SYSTEM

LIFT STATION CONSTRUCTION DETAILS

ELECTRICAL STANDARDS

FINAL SUBMITTAL

ECUA

EMERALD COAST UTILITIES AUTHORITY

APPROVED BY:

Drawn:
Designed:
Checked:
Date: MAY '13
Scale:
Project No:
Sheet No. 11
OF 18 Sheets

ALL WORK SHALL BE CONSTRUCTED IN ACCORDANCE WITH THE LATEST EDITION OF THE E.C.U.A. STANDARD SPECIFICATIONS

Power & Control Conductors, CGB's and Hubs

Cable Number	Description	Manufacturer	Catalog Numer	Length (Max Ft)	Cable Diameter	Appleton Liquidtight Cable Connector	Connector Cable Range	Crouse-Hinds Myers Hub	From Panel/Enclosure	To Panel/Enclosure
P-13	(3)#8 AWG W/GND, Tray Cable	Houston Wire & Cable	HW 154 00803	6 FT	0.58"	(1) - CG-5075	0.500"-0.625"	(1) 3/4" - STA-2	Power Panel	480/240-120V Transformer
P-14	(3)#6 AWG W/GND, Tray Cable	Houston Wire & Cable	HW 154 00603	6 FT	0.69"	(1) - CG-6275	0.625"-0.750"	(1) 3/4" - STA-2	480/240-120V Transformer	Power Panel
P-15	3-1/C #12 AWG	N/A	N/A	AS REQ'D	N/A	N/A	N/A	N/A	Power Panel	Power Panel
P-16	3-1/C #12 AWG	N/A	N/A	AS REQ'D	N/A	N/A	N/A	N/A	Power Panel	Power Panel
C-01	(16) #14 AWG, Tray Cable	Houston Wire & Cable	HW 151 01416	24 FT	0.68"	(2) - CG-6275	0.625"-0.750"	(2) 3/4" - STA-2	Power Panel	Control Panel
C-02	(5) #14 AWG, Tray Cable	Houston Wire & Cable	HW 151 01405	19 FT	0.41"	(2) - CG-3750	0.375"-0.500"	(2) 1/2" - STA-1	Control Panel	Pump 1 Panel
C-03	(16) #14 AWG, Tray Cable	Houston Wire & Cable	HW 151 01416	22 FT	0.68"	(2) - CG-6275	0.625"-0.750"	(2) 3/4" - STA-2	Control Panel	Pump 2 Panel
C-04	1 Pair #16 SH, Tray Cable	Houston Wire & Cable	HW 120 01601	22 FT	0.33"	(2) - CG-2575	0.250"-0.375"	(2) 3/4" - STA-2	Pump 1 Panel	Control Panel
C-05	1 Pair #16 SH, Tray Cable	Houston Wire & Cable	HW 120 01601	19 FT	0.33"	(2) - CG-2575	0.250"-0.375"	(2) 3/4" - STA-2	Pump 2 Panel	Control Panel
PUMP 1-PWR	Per Mfg Specs	N/A	N/A	N/A	N/A	CG Series based on Mfg Specs	N/A	STA Series based on Mfg Specs	Field (Pump 1)	Pump 1 Panel
PUMP 1-MTP	Per Mfg Specs	N/A	N/A	N/A	N/A	CG Series based on Mfg Specs	N/A	STA Series based on Mfg Specs	Field (Pump 1)	Pump 1 Panel
PUMP 1-SF	Per Mfg Specs	N/A	N/A	N/A	N/A	CG Series based on Mfg Specs	N/A	STA Series based on Mfg Specs	Field (Pump 1)	Pump 1 Panel
PUMP 2-PWR	Per Mfg Specs	N/A	N/A	N/A	N/A	CG Series based on Mfg Specs	N/A	STA Series based on Mfg Specs	Field (Pump 2)	Pump 2 Panel
PUMP 2-MTP	Per Mfg Specs	N/A	N/A	N/A	N/A	CG Series based on Mfg Specs	N/A	STA Series based on Mfg Specs	Field (Pump 2)	Pump 2 Panel
PUMP 2-SF	Per Mfg Specs	N/A	N/A	N/A	N/A	CG Series based on Mfg Specs	N/A	STA Series based on Mfg Specs	Field (Pump 2)	Pump 2 Panel
Float Switch 1	Float Switch Cable	BY OTHERS	N/A	N/A	0.56"	(1) - CG-5050	0.500"-0.625"	(1) 1/2" - STA-1	Field (Float Switch)	Control Panel
Float Switch 2	Float Switch Cable	BY OTHERS	N/A	N/A	0.56"	(1) - CG-5050	0.500"-0.625"	(1) 1/2" - STA-1	Field (Float Switch)	Control Panel
Pressure Xducer	Pressure Transducer Cable	BY OTHERS	N/A	N/A	0.35"	(1) - G-3150	0.312"-0.437"	(1) 1/2" - STA-1	Field (Float Switch)	Control Panel
Antenna COAX	Coaxial Cable	BY OTHERS	N/A	N/A	0.408"	(1) - CG-3750	0.375"-0.500"	(1) 1/2" - STA-1	Field (Antenna)	Control Panel

REVISIONS	BY

IMPROVEMENTS TO WASTEWATER COLLECTION SYSTEM

LIFT STATION CONSTRUCTION DETAILS

ELECTRICAL STANDARDS

FINAL SUBMITTAL

EMERALD COAST UTILITIES AUTHORITY

APPROVED BY:

Drawn:
Designed:
Checked:
Date: MAY '13
Scale:
Project No:
Sheet No. 12
Of 18 Sheets

NOTES:

ALL WORK SHALL BE CONSTRUCTED IN ACCORDANCE WITH THE LATEST EDITION OF THE E.C.U.A. STANDARD SPECIFICATIONS

1) ALL SPARE WIRE WILL BE CLEARLY LABELED WITH THE CABLE NUMBER & A SPARE DESIGNATION ON INDIVIDUAL WIRES. THESE SPARES WILL BE LONG ENOUGH TO REACH ANY POINT IN THE PANEL.
2) SPARE CONDUCTORS SHOULD BE TRIMMED AND HEAT SHRINK SHOULD BE USED TO SECURE THE SPARE CONDUCTORS IN THE CABLE.
3) THE INNER CONNECTING CONDUCTORS BETWEEN THE PANELS ARE CODED AS FOLLOWS: THE FIRST GROUP OF CHARACTER IS THE WIRE NUMBER AND THE SECOND GROUP IS THE COLOR (I.E. 1(BK) SIGNIFIES THAT THE WIRE NUMBER IS 1 AND THE COLOR IS BLACK). WIRE COLOR CODE AS FOLLOWS: BK-BLACK, RD-RED, BU-BLUE, OR-ORANGE, YL-YELLOW, BN-BROWN. FOR COLORS THAT ARE DENOTED AS XX/YY, XX IS THE BASE COLOR AND YY IS THE SPIRAL STRIPE (I.E. RD/BK IS A RED WIRE WITH A BLACK SPIRAL STRIPE).
4) SEE SHEETS 11 & 12 FOR PANEL TO PANEL INNER CONNECTING CONDUCTOR AND CABLE DETAILS.

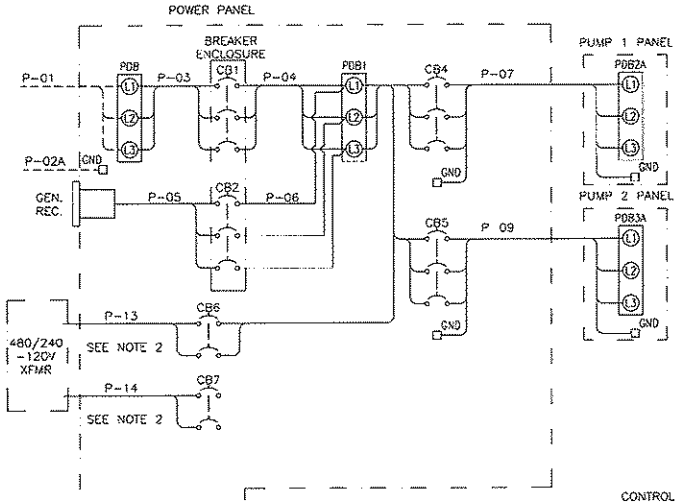

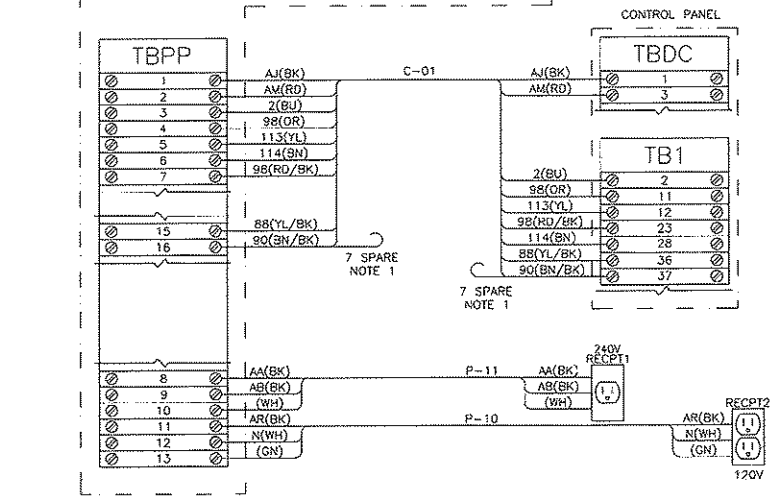

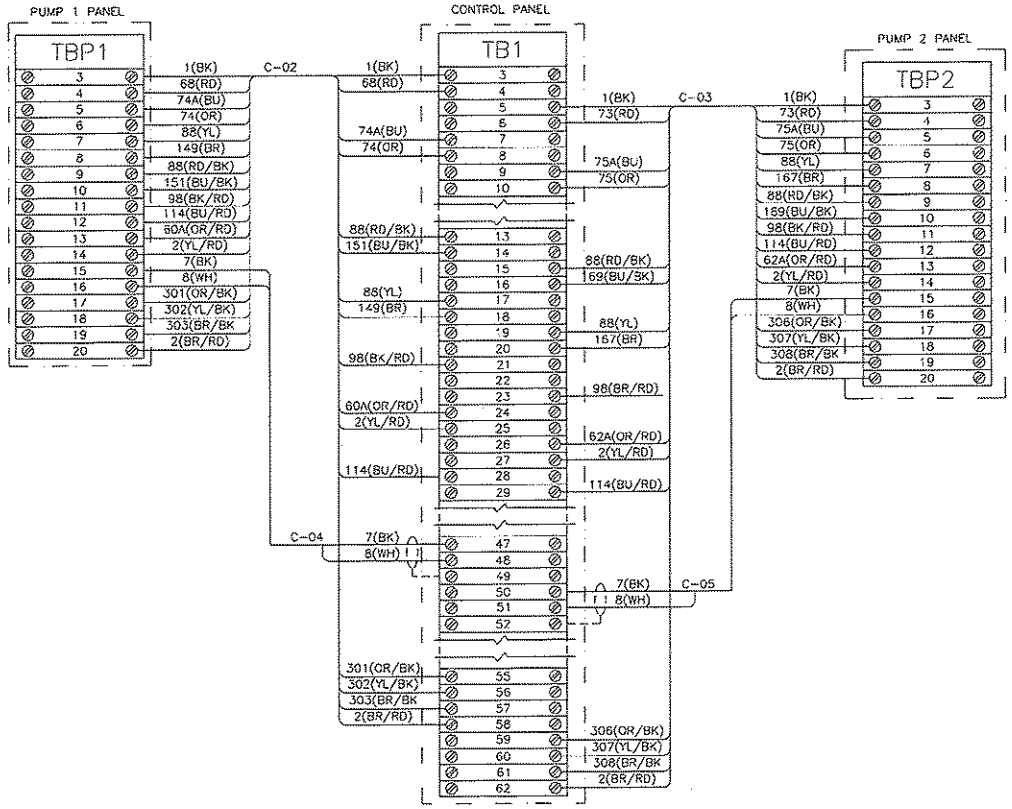

REVISIONS	BY

IMPROVEMENTS TO WASTEWATER COLLECTION SYSTEM

LIFT STATION CONSTRUCTION DETAILS

ELECTRICAL STANDARDS

FINAL SUBMITTAL

EMERALD COAST UTILITIES AUTHORITY

APPROVED BY:

Drawn:	
Designed:	
Checked:	
Date:	MAY '13
Scale:	
Project No:	
Sheet No.	13
	OF 18 Sheets

ALL WORK SHALL BE CONSTRUCTED IN ACCORDANCE WITH THE LATEST EDITION OF THE E.C.U.A. STANDARD SPECIFICATIONS

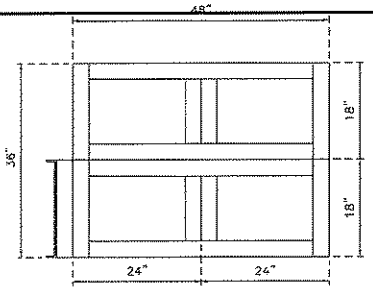

TOP VIEW

NOTES:

1. TOP AND BOTTOM OF BASE TO BE LEFT OPEN.
2. DRILL TOP OF BASE TO ATTACH ENCLOSURES AS REQUIRED.
3. DRILL BOTTOM OF BASE TO ATTACH TO SLAB AS REQUIRED.

ATTENTION

THIS LAYOUT IS ONE OF TWO (2) POSSIBLE CHOICES – SEE SHEET 14 FOR THE OTHER OPTION. IF THIS LAYOUT OPTION IS SELECTED, SEE SHEET 7A FOR ASSOCIATED PANEL LAYOUT DETAILS.

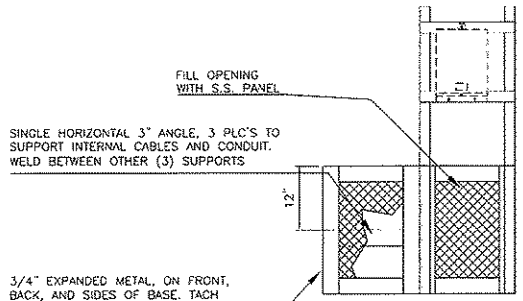

END VIEW

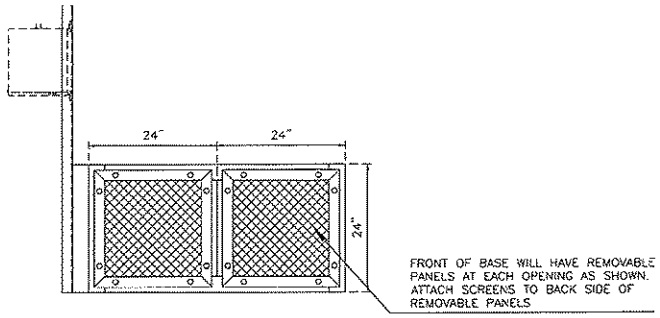

FRONT VIEW

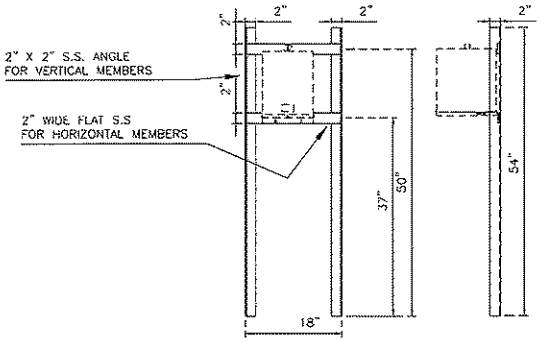

RACK DETAILS

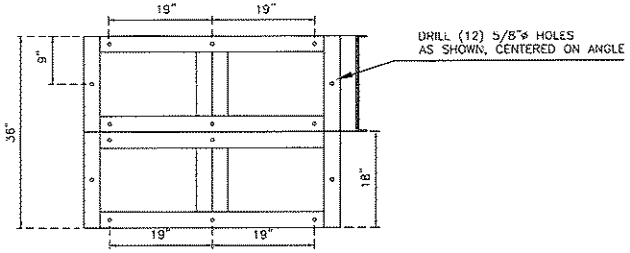

BOTTOM VIEW

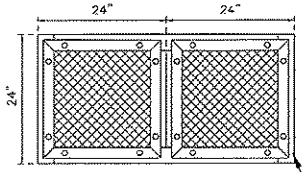

BACK VIEW

ENTIRE BASE MADE FROM 3" STAINLESS STEEL ANGLE, WELDED

REVISIONS	BY

IMPROVEMENTS TO WASTEWATER COLLECTION SYSTEM

LIFT STATION CONSTRUCTION DETAILS

ELECTRICAL STANDARDS

FINAL SUBMITTAL

EMERALD COAST UTILITIES AUTHORITY

APPROVED BY:

Drawn:	
Designed:	
Checked:	
Date:	MAY '13
Scale:	
Project No:	
Sheet No.	14A
	OF 18 Sheets

ALL WORK SHALL BE CONSTRUCTED IN ACCORDANCE WITH THE LATEST EDITION OF THE E.C.U.A. STANDARD SPECIFICATIONS

Power Panel Fuse Schedule				
Fuse	Type	Voltage	Amps	Description
F1	KTK-R-1	600	1A	Phase Monitor A Phase
F2	KTK-R-1	600	1A	Phase Monitor B Phase
F3	KTK-R-1	600	1A	Phase Monitor C Phase
F10	AGC-3	250	3A	Power Supply 1 Primary
F11	AGC-3	250	3A	Power Supply 2 Primary

Pump 1 Panel Fuse Schedule				
Fuse	Type	Voltage	Amps	Description
F4	FNQ-R-1/4	600	1/4A	Pump 1 CPT Phase A
F5	FNQ-R-1/4	600	1/4A	Pump 1 CPT Phase C
F6	FNQ-1/2	500	1/2A	Pump 1 CPT Secondary

Pump 2 Panel Fuse Schedule				
Fuse	Type	Voltage	Amps	Description
F7	FNQ-R-1/4	600	1/4A	Pump 2 CPT Phase A
F8	FNQ-R-1/4	600	1/4A	Pump 2 CPT Phase C
F9	FNQ-1/2	500	1/2A	Pump 2 CPT Secondary

Control Panel Fuse Schedule				
Fuse	Type	Voltage	Amps	Description
F12	AGC-10	250	10A	Power Supply 1 Secondary
F13	AGC-10	250	10A	Power Supply 2 Secondary
F14	AGC-10	250	10A	Control Power
F15	AGC-10	250	10A	Batteries
F16	AGC-2	250	2A	Radio Power Supply Primary
F17	AGC-2	250	2A	Radio Power Supply Secondary
F18	AGC-1/4	250	1/4A	Pump 1 Motor Thermal
F19	AGC-1/4	250	1/4A	Pump 2 Motor Thermal
F20	AGC-1/10	250	1/10A	Operator Interface
F21	AGC-1	250	1A	Digital Inputs 0.0-1.4
F22	AGC-1	250	1A	Digital Inputs 1.5-2.7
F23	AGC-2	250	2A	Digital Outputs 0.0-0.7
F24	AGC-2	250	2A	Digital Outputs 1.0-1.7
F25	AGC-1-1/2	250	1-1/2A	PLC Power
F26	AGC-3/4	250	3/4A	Process Transmitter Supply
F27	AGC-1/10	250	1/10A	Analog Inputs
F28	AGC-1/10	250	1/10A	Analog Outputs
F29	GMA-1/4	250	1/4A	Analog Input 2
F30	GMA-1/4	250	1/4A	Analog Input 3
F31	GMA-1/4	250	1/4A	Analog Input 4

HMI BUTTON LEGEND	
F1	FAULT RESET/ENABLE INTRUSION
SHIFT+F1	DISABLE INTRUSION
F2	ALTERNATE PUMP ASSIGNMENTS
F3	RESET PUMP 1 RUNTIME
SHIFT+F3	RESET PUMP 2 RUNTIME
F4	ALARMS SCREEN
F5	OVERVIEW SCREEN
F6	PUMP 1 SCREEN
F7	PUMP 2 SCREEN
F8	SETPOINTS SCREEN

CONTROL PANEL EXT. INFORMATION TAGS

THIS AREA IN FRONT OF CABINET ALL SAFE CIRCUITS AND DEVICES ONLY. THIS AREA INCLUDES LAN SPACE, BUTTON, IN FRONT OF THE BLUE AREA BETWEEN THE BACKPANEL AND THE ENCLOSURE WALLS AND DOOR INCLUDING THE BOTTOM OF THE ENCLOSURE. ONLY INTRINSICALLY SAFE DEVICES AND WIRING ARE ALLOWED IN THIS AREA. DO NOT ROUTE NON-INTRINSICALLY SAFE WIRE THROUGH THE AREA OF ENCLOSURE.

WARNING

SUBSTITUTION OF COMPONENTS MAY IMPAIR INTRINSIC SAFETY

CONTROL PANEL EXTERIOR TAG INFORMATION

WARNING

TO PREVENT IGNITION OF FLAMMABLE OR COMBUSTIBLE ATMOSPHERES DISCONNECT POWER BEFORE SERVICING

PROVIDES INTRINSICALLY SAFE CIRCUITS FOR USE IN CLASS I, GROUPS A, B, C, AND D WHEN CONNECTED TO PLC INTERFACE DRAWING ON MAIN NAMEPLATE LABEL

CONTROL PANEL DEAD-FRONT TAG INFORMATION

SECURELY TAPE ALL INNER DOOR LATCHES BEFORE CLOSING OUTER DOOR. FAILURE TO FOLLOW THESE INSTRUCTIONS COULD CAUSE THE OUTER DOOR TO JAM WHEN RE-OPENED

Nameplate Data							
Total Load (FLA)	16	18	21	27	33	39	53
Motor Hp	1	2	3	5	7.5	10	15
Motor FLA	2.1	3.4	4.8	7.6	11	14	21

Torque Rating Table							
	Horsepower						
Component	1	2	3	5	7.5	10	15
Incoming Distribution Block (PDB1)	35lb-in/4.0N-m	35lb-in/4.0N-m	35lb-in/4.0N-m	35lb-in/4.0N-m	40lb-in/4.5N-m	40lb-in/4.5N-m	120lb-in/13.5N-m
Main Ground Block	20lb-in/2.2N-m	20lb-in/2.2N-m	20lb-in/2.2N-m	20lb-in/2.2N-m	20lb-in/2.2N-m	20lb-in/2.2N-m	25lb-in/2.8N-m
Motor Distribution Block (PDB2 & 3)	35lb-in/4.0N-m	35lb-in/4.0N-m	35lb-in/4.0N-m	35lb-in/4.0N-m	35lb-in/4.0N-m	35lb-in/4.0N-m	35lb-in/4.0N-m
Motor Ground Block	35lb-in/4.0N-m	35lb-in/4.0N-m	35lb-in/4.0N-m	35lb-in/4.0N-m	35lb-in/4.0N-m	35lb-in/4.0N-m	35lb-in/4.0N-m

REVISIONS	BY

IMPROVEMENTS TO WASTEWATER COLLECTION SYSTEM

LIFT STATION CONSTRUCTION DETAILS

ELECTRICAL STANDARDS

FINAL SUBMITTAL

ECUA EMERALD COAST UTILITIES AUTHORITY

APPROVED BY:

Drawn:
Designed:
Checked:
Date: MAY '13
Scale:
Project No:
Sheet No. 15
OF 18 Sheets

ALL WORK SHALL BE CONSTRUCTED IN ACCORDANCE WITH THE LATEST EDITION OF THE E.C.U.A. STANDARD SPECIFICATIONS

HAZARDOUS (CLASSIFIED) LOCATION	NON-HAZARDOUS LOCATION
CLASS I, ZONE 0 OR 1, GROUPS IIC, IIB, IIA or CLASS I, DIVISION 1, GROUPS A,B,C,D CLASS II, DIVISION 1, GROUPS E,F,G CLASS III, DIVISION 1	CLASS I, ZONE 2, GROUPS IIC, IIB, IIA or CLASS I, DIVISION 2, GROUPS A,B,C,D

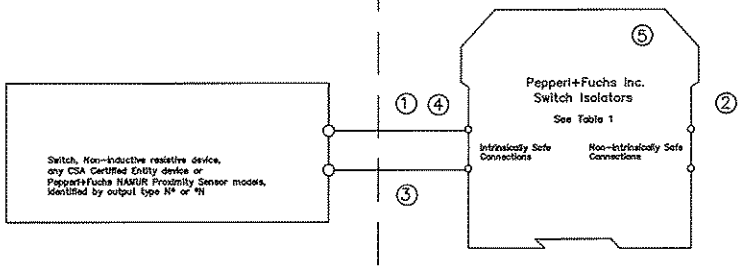

Notes:

① The intrinsically safe wiring must be installed in accordance with the Canadian Electrical Code CSA C22.1, Part 1, Appendix F.

② Barriers listed in Table 1 shall not be connected to any device that uses or generates in excess of 250Vrms or DC unless it has been determined that the voltage is adequately isolated from the barrier. Barriers listed in Table 2 shall not be connected to any device that uses or generates in excess of 60Vrms or DC unless the voltage is limited by an adequate means.

③ Any combination of up to 10 channels of the barriers listed in Table 1 or Table 2 may be connected in parallel and connected to a switch in a hazardous location.

④ The Entity concept allows interconnection of intrinsically safe apparatus with associated apparatus not specifically examined in combination as a system when the approved values of Voc and Isc for the associated apparatus are less than or equal to Vmax and Imax for the intrinsically safe apparatus and the approved values of Ca and La for the associated apparatus are greater than Ci + Ccable and Li + Lcable, respectively, for the intrinsically safe apparatus.

⑤ The following models with part number greater than 100000 are approved for mounting in a Class I, Zone 2, Groups IIC,IIB,IIA or Class I, Division 2, Groups A,B,C,D hazardous (classified) location: KF**-SR2-EX1.W, KF**-SR2-EX1.W.LB, KF**-SR2-EX2.W, KFD2-SR2-EX2.2S, KFD2-ST2-EX1.*, KFD2-ST2-EX2.*, KFD2-SOT2-EX1.*, KFD2-SOT2-EX2.*.

WARNING: Substitution of components may impair intrinsic safety and/or suitability for use in Class I, Division 2, Groups A,B,C,D or Class I, Zone 2, Groups IIC,IIB,IIA.
ADVERTISSEMENT: La substitution de composants peut compromettre la sécurité intrinsèque.

No changes without prior permission
CSA
THIS DRAWING CONTAINS PROPRIETARY DATA. NO DISCLOSURE, REPRODUCTION, OR USE OF ANY PART MAY BE MADE EXCEPT BY WRITTEN PERMISSION.

Title Installation Drawing for CSA Certified Switch Isolators

Revisions				ECO No.	
2-20-2008					
In.	Date	Cons.	Resp.	Appr.	

Pepperl+Fuchs® Inc. Twinsburg, OH 44087-2202 | Repl. No. - | Draw. No. 116-0047j | Sh. 1 of 2

TABLE 1: Barriers Certified to CSA Standard C22.2 No. 157 (Um = 250 V)

Model Numbers	Terminals	SYSTEM V_{max}(V)	SYSTEM Res. (Ω)	ENTITY V_{oc}(V)	ENTITY I_{sc}(mA)	ENTITY C_a(uF) GRPS A,B	ENTITY C_a(uF) GRPS C,E	ENTITY C_a(uF) GRPS D,F,G	ENTITY L_a(mH) GRPS A,B	ENTITY L_a(mH) GRPS C,E	ENTITY L_a(mH) GRPS D,F,G
KFD2-SOT-Ex1*,KFD2-SOT-Ex2* KFD2-SR-Ex1*,KFD2-SR-Ex2* KFD2-SRT-Ex1* KFD2-ST-Ex1*,KFD2-ST-Ex2* KFA5-SR2-Ex1*,KFA5_SR2-Ex2* KFA6-SR2-Ex1*,KFA6-SR2-Ex2* KFD2-SR2-Ex1*,KFD2-SR2-Ex2*	1-3, 2-3; 4-6, 5-6	12.6	650	12.9	19.8	1.273	3.820	10.18	84.88	298.7	744.4
KFA5-SOT2-Ex1*,KFA5-SOT2-Ex2* KFA6-SOT2-Ex1*,KFA6-SOT2-Ex2*	1-3, 2-3; 4-6, 5-6	10.5	811	10.5	13.0	2.66	7.9	21.3	192	671	1000

TABLE 2: Barriers Certified to CSA Standard E79-11 (Um = 60 V)

Model Numbers	Terminals	Load Parameters U_o (V_{oc})	I_o (I_{sc})	C_o(uF) GRPS IIC (A,B)	C_o(uF) GRPS IIB (C,E)	C_o(uF) GRPS IIA (D,F,G)	L_o(mH) GRPS IIC (A,B)	L_o(mH) GRPS IIB (C,E)	L_o(mH) GRPS IIA (D,F,G)
KFD2-SOT2-Ex1*,KFD2-SOT2-Ex2* KFD2-ST2-Ex1*,KFD2-ST2-Ex2*	1-3, 2-3; 4-6, 5-6	10.5	13.0	2.66	7.9	21.3	192	671	1000

No changes without prior permission
CSA
THIS DRAWING CONTAINS PROPRIETARY DATA. NO DISCLOSURE, REPRODUCTION, OR USE OF ANY PART MAY BE MADE EXCEPT BY WRITTEN PERMISSION.

Title Installation Drawing for CSA Certified Switch Isolators

Revisions				ECO No.	
2-20-2008					
In.	Date	Cons.	Resp.	Appr.	

Pepperl+Fuchs® Inc. Twinsburg, OH 44087-2202 | Repl. No. - | Draw. No. 116-0047j | Sh. 2 of 2

REVISIONS	BY

IMPROVEMENTS TO WASTEWATER COLLECTION SYSTEM
LIFT STATION CONSTRUCTION DETAILS
ELECTRICAL STANDARDS
FINAL SUBMITTAL

EMERALD COAST UTILITIES AUTHORITY

APPROVED BY:

Drawn:
Designed:
Checked:
Date: MAY '13
Scale:
Project No:
Sheet No. 16
OF 18 Sheets

GENERAL ELECTRICAL NOTES

NEW WORK:

1. ENTIRE ELECTRICAL INSTALLATION SHALL BE IN ACCORDANCE WITH THE LATEST EDITION (UNLESS NOTED OTHERWISE) OF THE FOLLOWING CODES AND STANDARDS:
   1.1. NATIONAL ELECTRICAL CODE (NFPA 70).
   1.2. STANDARD FOR FIRE PROTECTION IN WASTEWATER TREATMENT AND COLLECTION FACILITIES (NFPA 820).
2. THE CONTRACTOR SHALL BE RESPONSIBLE FOR READING ALL PROJECT SPECIFICATIONS AND WILL BE RESPONSIBLE FOR MEETING ALL REQUIREMENTS OUTLINED IN THE SPECIFICATIONS.
3. CONTRACTOR SHALL COORDINATE ALL WORK WITH OTHER TRADES PRIOR TO ROUGH-IN AND INSTALLATION.
4. WORKING SPACE FOR ALL ELECTRICAL AND CONTROL EQUIPMENT OPERATING AT 600V VOLTS OR LESS TO GROUND AND LIKELY TO REQUIRE EXAMINATION, ADJUSTMENT, SERVICING, OR MAINTENANCE WHILE ENERGIZED SHALL COMPLY WITH NEC, ARTICLE 110.26.
5. THE ELECTRICAL DESIGN PROVIDES A NUMBER OF BRANCH CIRCUITS, AMPACITY AND OVERCURRENT PROTECTION FOR OTHER DIVISIONS DESIGN BASIS EQUIPMENT CONFORMING TO MANUFACTURER'S SPECIFICATIONS AVAILABLE AT TIME OF DESIGN. THE CONTRACTOR SHALL VERIFY ALL EQUIPMENT LOADS PRIOR TO ROUGH-IN. IF REQUIREMENTS OF EQUIPMENT ACTUALLY PROVIDED UNDER CONTRACT FOR CONSTRUCTION ARE DIFFERENT, CONTRACTOR SHALL MAKE ALL CHANGES NECESSARY WITHOUT INCREASE IN THE CONTRACT AMOUNT. SUCH CHANGES SHALL BE BASED UPON REQUIREMENTS, NAMEPLATE VALUES AND CODE REQUIREMENTS, WHICHEVER IS MORE STRINGENT, AND MAY INCLUDE, BUT ARE NOT LIMITED TO: SIZE OF CONDUCTORS, SIZE OF CONDUIT, QUANTITY OF CONDUCTORS AND CONDUITS, TYPE AND SIZE OF CIRCUIT BREAKER OR DISCONNECT, OVERLOADS, FULL-VOLTAGE STARTERS, REDUCED VOLTAGE SOFT STARTERS, VARIABLE FREQUENCY DRIVES, AND FUSE PROTECTION.
6. THE ELECTRICAL CONTRACTOR IS REQUIRED TO COORDINATE, PROVIDE, AND INSTALL A FULLY OPERATIONAL AND CODE COMPLIANT ELECTRICAL SYSTEM. THIS MAY INCLUDE THE ADDITION OF ELECTRICAL ITEMS NOT SHOWN ON THE ELECTRICAL PLANS, BUT REQUIRED FOR SYSTEM OPERATION.
7. CONTRACTOR SHALL COORDINATE INSTALLATION OF ELECTRICAL SERVICE WITH ELECTRICAL UTILITY COMPANY PROVIDING ELECTRICAL SERVICE TO FACILITY. CONTRACTOR SHALL PAY ALL FEES ASSESSED BY ELECTRICAL UTILITY COMPANY TO PROVIDE ELECTRICAL SERVICE TO FACILITY.
8. CONTRACTOR SHALL EXCAVATE AND CONDUCT DEMOLITION SO AS TO AVOID DAMAGE TO EXISTING UTILITIES AND OTHER UNDERGROUND OR CONCEALED ITEMS. IF EXISTING OR NEW ITEMS ARE DAMAGED, THE CONTRACTOR SHALL NOTIFY THE OWNER AT ONCE OF ALL DAMAGE AND SHALL REPAIR (OR REPLACE IF NECESSARY) TO THE ORIGINAL CONDITION TO THE SATISFACTION OF OWNER AND ENGINEER AT NO CHARGE IN THE CONTRACT AMOUNT.
9. THE CONTRACTOR SHALL BE RESPONSIBLE FOR PROVIDING DETAILED ELECTRICAL AND CONTROL EQUIPMENT LAYOUT DRAWINGS TO THE ENGINEER AND OWNER FOR APPROVAL PRIOR TO INSTALLATION.
10. ALL CONDUITS NOT LOCATED UNDER SLAB SHALL HAVE A MINIMUM BURIAL DEPTH OF 42", UNLESS NOTED OTHERWISE.
11. CONDUITS SHALL BE BURIED 42" (MINIMUM) BELOW GRADE WITH MARKER TAPE 6" ABOVE TOP OF CONDUIT, UNLESS NOTED OTHERWISE.
12. MINIMUM SIZE CONDUIT SHALL BE 1" (UNLESS NOTED OTHERWISE).
13. CONDUIT ROUTINGS AND DEVICE/EQUIPMENT LOCATIONS SHOWN ARE DIAGRAMMATIC ONLY. CONTRACTOR SHALL FIELD ROUTE AND LOCATE AS REQUIRED.
14. CONTRACTOR SHALL PROVIDE PULL BOXES IN POWER CIRCUIT CONDUIT AS REQUIRED TO LIMIT THE NUMBER OF BENDS TO A MAXIMUM OF 270° OR THREE 90° BENDS.
15. ALL WIRE SHALL BE COPPER.
16. ALL ELECTRICAL CIRCUITS SHALL INCLUDE A GREEN GROUNDING CONDUCTOR SIZED PER NEC.
17. CONDUCTORS SHALL BE TERMINATED ON TERMINAL BLOCKS.
18. THE CONTRACTOR SHALL TAG ALL POWER AND CONTROL SYSTEM CABLING AT ALL TERMINATION POINTS.
19. FINAL CONNECTION TO ALL EQUIPMENT IS SHOWN DIAGRAMMATIC. PROVIDE FINAL CONNECTION AS REQUIRED PER MANUFACTURER OF EQUIPMENT.
20. CONTRACTOR SHALL MAINTAIN A SET OF PRINTS AND MARK-UP DURING CONSTRUCTION TO REFLECT "AS-BUILT" CONDITIONS. PRINTS SHALL BE DELIVERED TO THE ENGINEER UPON COMPLETION OF THE PROJECT.
21. ALL HARDWARE SHALL BE STAINLESS STEEL.
22. ALUMINUM CONDUIT SHALL BE COATED WITH (2) WRAPS OF ANTI-CORROSION TAPE OR RUN THROUGH A SCHEDULE 80 PVC SLEEVE TO WHEN IN CONTACT WITH CONCRETE.
23. BARE COPPER SHALL BE COATED WITH (2) WRAPS OF ANTI-CORROSION TAPE OR RUN THROUGH A SCHEDULE 80 PVC SLEEVE TO WHEN IN CONTACT WITH CONCRETE.
24. ENGINEER OF RECORD SHALL BE RESPONSIBLE FOR FINAL SIZING OF ALL EQUIPMENT.

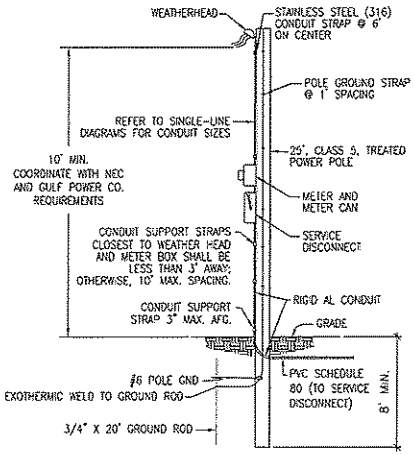

SERVICE LATERAL CONDUIT SHALL BE 3" (MIN) SCHEDULE 80 PVC BELOW GRADE AND 3" (MIN) RIGID AL CONDUIT ABOVE GRADE. ANY REQUIREMENTS BY THE UTILITY COMPANY SHALL PREVAIL OVER THE REQUIREMENTS OUTLINED HERE AND SHALL BE COORDINATED BY THE ELECTRICAL CONTRACTOR PRIOR TO INSTALLATION.

A3 UTILITY POLE DETAIL
NOT TO SCALE

ALL WORK SHALL BE CONSTRUCTED IN ACCORDANCE WITH THE LATEST EDITION OF THE E.C.U.A. STANDARD SPECIFICATIONS

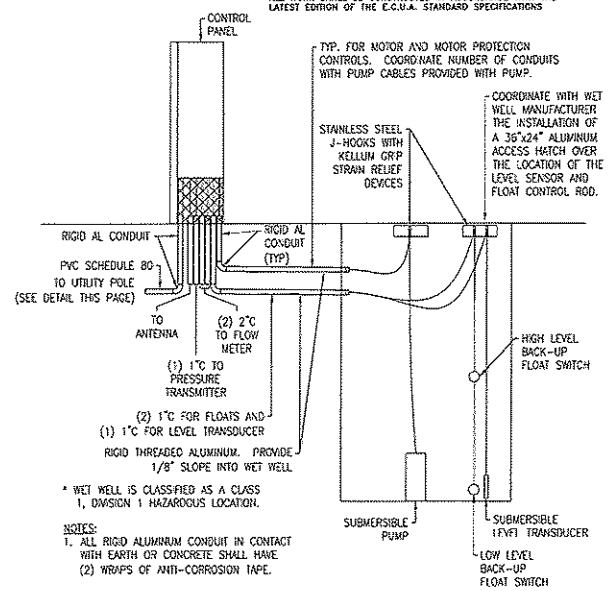

* WET WELL IS CLASSIFIED AS A CLASS 1, DIVISION 1 HAZARDOUS LOCATION.

NOTES:
1. ALL RIGID ALUMINUM CONDUIT IN CONTACT WITH EARTH OR CONCRETE SHALL HAVE (2) WRAPS OF ANTI-CORROSION TAPE.

B4 TYPICAL WET WELL SECTION DETAIL
NOT TO SCALE

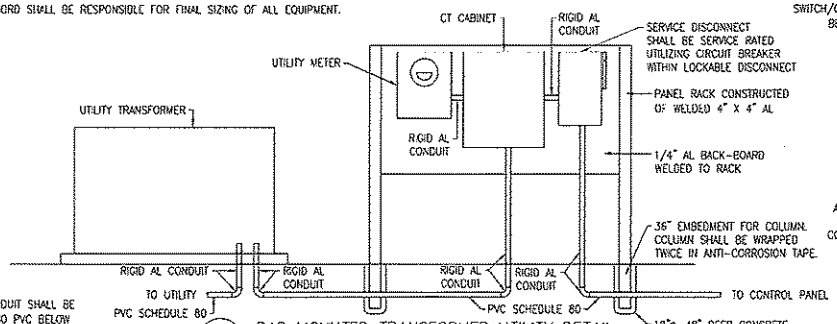

* SERVICE LATERAL CONDUIT SHALL BE 3" (MIN) SCHEDULE 80 PVC BELOW GRADE AND 3" (MIN) RIGID ALUMINUM CONDUIT ABOVE GRADE.

A1 PAD MOUNTED TRANSFORMER UTILITY DETAIL
NOT TO SCALE

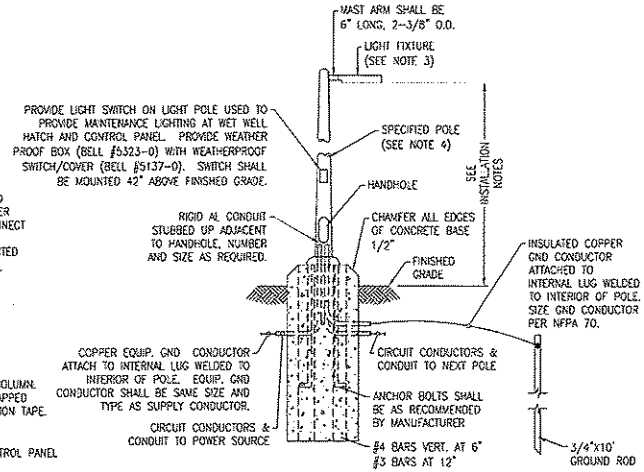

A4 LIGHT POLE INSTALLATION DETAIL
NOT TO SCALE

LIGHTING PERFORMANCE CRITERIA:
1. LIGHTING FIXTURE LAYOUT SHALL BE BASED UPON ACHIEVING 20 FOOT CANDLES (+/- 20%) AT THE FRONT OF THE CONTROL PANEL (WORK-PLANE OF 24" AFG) AND AT THE WET WELL ACCESS HATCH (WORKPLANE OF 0" AFG).
2. GENERAL SECURITY LIGHTING SHALL ENCOMPASS ACCESS GATE AND ALL PIPING/EQUIPMENT AT A MIN: AVERAGE 1 FOOT-CANDLE (+/- 20%, AT WORKPLANE OF 0" AFG).
3. REFER TO LIGHTING CONTROL DIAGRAM ON SHEET No. 18 FOR ADDITIONAL REQUIREMENTS.

LIGHT POLE INSTALLATION NOTES:
1. BURIAL AND DIAMETER DIMENSIONS INDICATED ARE FOR NOMINAL MINIMAL SIZES ONLY. FINAL DIMENSIONS SHALL BE DETERMINED BY A REGISTERED STRUCTURAL ENGINEER IN THE STATE OF FLORIDA. BASED UPON FIXTURES PROVIDED. PROVIDE SIGNED, DATED, AND SEALED PLANS FOR EACH INSTALLATION TYPE AND FIXTURE TYPE AS PART OF LIGHTING SUBMITTAL PACKAGE.
2. THE POLE AND FOUNDATION DESIGN SHALL BE BY A DELEGATED PROFESSIONAL ENGINEER TO MEET THE FOLLOWING CRITERIA:
   2.1. DESIGN WIND SPEED 160 MPH WITH A 1.3 GUST FACTOR. EXPOSURE CATEGORY C.
   2.2. SIZE EMBEDMENT FOR A MAXIMUM PERMANENT POLE DEFLECTION AFTER DESIGN WIND SPEED EVENT OF 1.00".
   2.3. ALUMINUM, ROUND OR SQUARE, TAPERED.
3. FIXTURE SHALL BE AMERICAN ELECTRIC LIGHTING AT82 FIXTURE, 40 LED, 1000mA DRIVER, 120V, TYPE 4, WITH PHOTOCONTROL.
4. REFER TO SPECIFICATIONS SECTION 16521 "EXTERIOR LIGHTING" FOR ADDITIONAL REQUIREMENTS.
5. LIGHT FIXTURES SHALL BE MOUNTED AT 15'-0" (MAXIMUM) ABOVE FINISHED GRADE.

REVISIONS	BY

IMPROVEMENTS TO WASTEWATER COLLECTION SYSTEM
LIFT STATION CONSTRUCTION DETAILS
ELECTRICAL STANDARDS
FINAL SUBMITTAL

EMERALD COAST UTILITIES AUTHORITY

APPROVED BY:

Drawn:
Designed:
Checked:
Date: MAY '13
Scale:
Project No:
Sheet No. 17
OF 18 Sheets

ALL WORK SHALL BE CONSTRUCTED IN ACCORDANCE WITH THE LATEST EDITION OF THE E.C.U.A. STANDARD SPECIFICATIONS

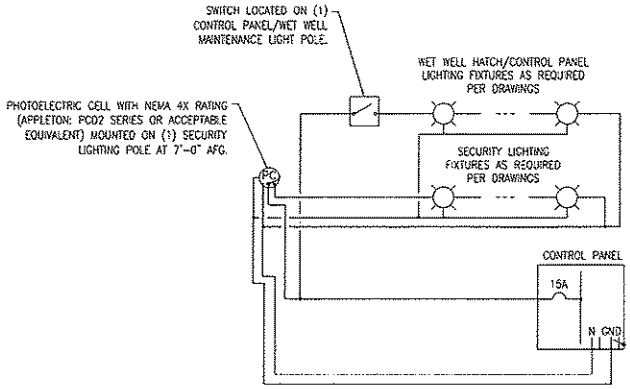

C2 TYPICAL LIGHTING CONTROL DIAGRAM
NOT TO SCALE

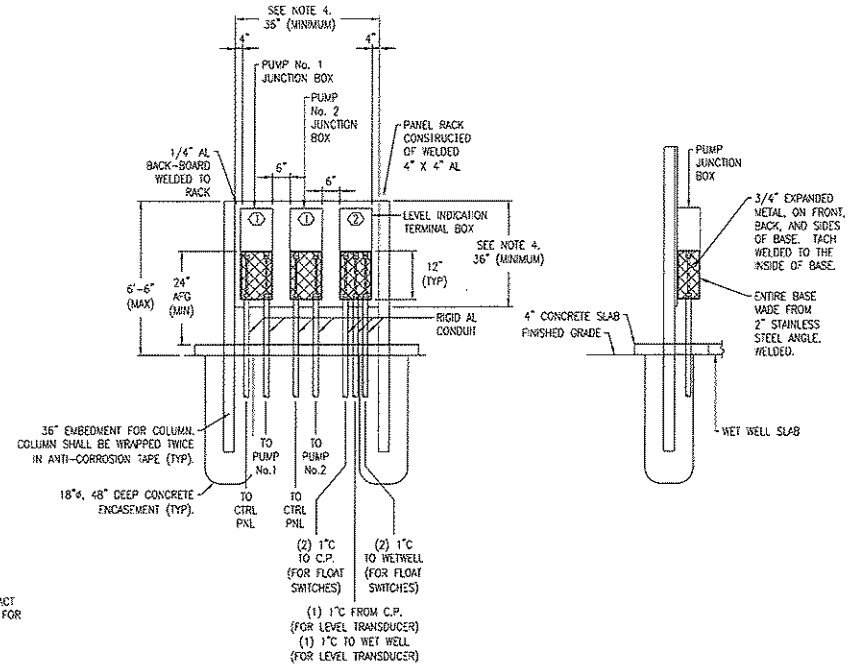

FRONT ELEVATION

SIDE ELEVATION

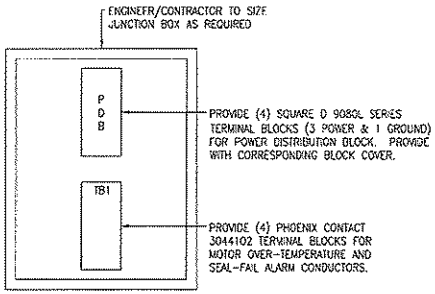

INTERIOR ELEVATION

DETAIL NOTES:

1. ALL TERMINAL BLOCKS SHALL BE PROVIDED WITH CORRESPONDING END BRACKETS AND END COVERS.
2. PROVIDE SEPARATE GROUND LUG IN EACH JUNCTION BOX, BONDED TO JUNCTION BOX.

A1 TYPICAL PUMP JUNCTION BOX ELEVATION
NOT TO SCALE

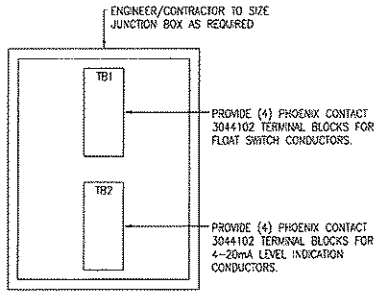

INTERIOR ELEVATION

DETAIL NOTES:

1. ALL TERMINAL BLOCKS SHALL BE PROVIDED WITH CORRESPONDING END BRACKETS AND END COVERS.
2. PROVIDE SEPARATE GROUND LUG IN EACH JUNCTION BOX, BONDED TO JUNCTION BOX.

A3 TYPICAL LEVEL INDICATION JUNCTION BOX ELEVATION
NOT TO SCALE

DETAIL NOTES:

1. THIS DETAIL SHALL ONLY APPLY WHEN THE CONTROL PANEL CANNOT BE PLACED WITHIN 6'-0" OF THE WET WELL TO ALLOW FOR CONNECTION OF STANDARD 50 FOOT PUMP CABLE CONNECTIONS.
2. BACKBOARD SHALL BE PLACED AT THE EDGE OF THE WET WELL SLAB BETWEEN THE WET WELL AND CONTROL PANEL.
3. JUNCTION BOXES SHALL BE MOUNTED SUCH THAT THEY ARE FACING THE WET WELL.
4. ENGINEER/CONTRACTOR SHALL SIZE JUNCTION BOXES AND BACKBOARDS BASED UPON INSTALLATION REQUIREMENTS PROVIDED AT TIME OF DESIGN.

KEY NOTES

1. REFER TO "TYPICAL PUMP JUNCTION BOX ELEVATION" (THIS SHEET) FOR ADDITIONAL REQUIREMENTS.
2. REFER TO "TYPICAL LEVEL INDICATION JUNCTION BOX ELEVATION" (THIS SHEET) FOR ADDITIONAL REQUIREMENTS.

A4 TYPICAL PUMP JUNCTION BOXES
NOT TO SCALE

REVISIONS	BY

IMPROVEMENTS TO WASTEWATER COLLECTION SYSTEM

LIFT STATION CONSTRUCTION DETAILS

ELECTRICAL STANDARDS

FINAL SUBMITTAL

EMERALD COAST UTILITIES AUTHORITY

APPROVED BY:

Drawn:	
Designed:	
Checked:	
Date:	MAY '13
Scale:	
Project No:	
Sheet No.	18
	OF 18 Sheets