NOTES:

1. NEW PIPE SHALL BE CAPPED OR PLUGGED FOR PRESSURE TEST. ONCE TEST IS SATISFACTORILY COMPLETED NEW MAIN IS TO BE CONNECTED TO EXISTING MAIN IN A MANNER ACCEPTABLE TO E.C.U.A.
2. THE CONTRACTOR SHALL FLUSH LINE PRIOR TO STARTING THE CHLORINATION PROCEDURE. ALL FLUSHING SHALL BE DONE THROUGH THE EXISTING VALVE WITH ALL HYDRANTS AND SERICE LINES OPEN. E.C.U.A. INSPECTOR SHALL BE THE ONLY PERSON ALLOWED TO OPERATE THE VALVE AND SHALL BE PRESENT DURING FLUSHING OPERATION.
3. ONCE SATISFACTORY BACTERIOLOGICAL SAMPLES ARE OBTAINED THE CONTRACTOR SHALL CLOSE BOTH CORPORATION STOPS AND REMOVE SERVICE TUBING, PUMP AND BACK FLOW PREVENTER; CAP CORPORATION STOPS WITH BRASS CAPS.
4. CONTRACTOR SHALL FURNISH ALL MATERIALS, EQUIPMENT AND LABOR NECESSARY FOR FILLING, CHLORINATING AND TESTING PROCEDURES. CONTRACTOR SHALL PROVIDE SAMPLING TAPS AT THOSE LOCATIONS APPROVED BY THE E.C.U.A. INSPECTOR. E.C.U.A. SHALL COLLECT TEST SAMPLES. CONTRACTOR IS RESPONSIBLE FOR PROPER DISPOSAL OF CHLORINATED WATER.
5. IF 20' STUB OUT IS NOT PRESENT, SPECIAL ARRANGEMENTS WILL HAVE TO BE MAKE TO DEPRESSURIZE THE EXISTING MAIN TO MAKE CONNECTION TO THE EXSITING VALVE.

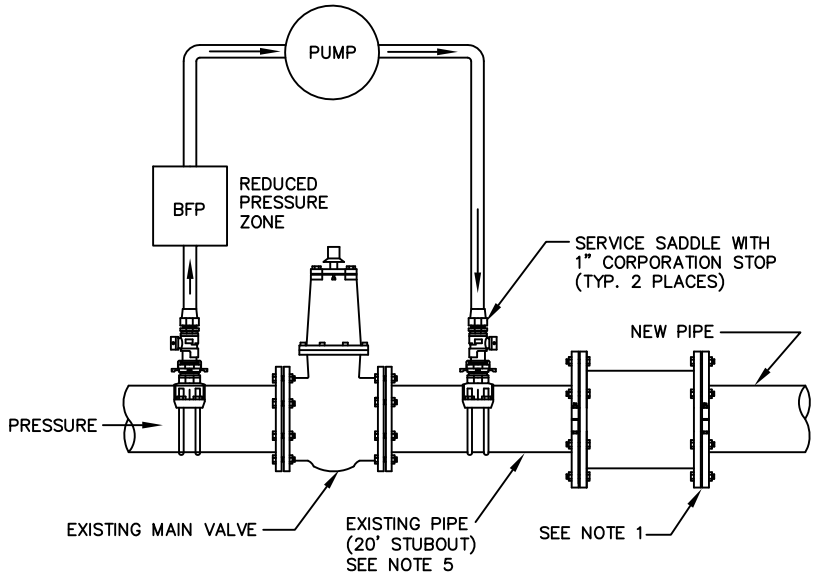


TYPICAL CONNECTION FOR NEW LINE FILLING, PRESSURE TESTING, FLUSHING AND CHLORINATION. (EXISTING STUBOUT)

NOTES:

1. NEW PIPE SHALL BE CAPPED OR PLUGGED FOR PRESSURE TEST. ONCE TEST IS SATISFACTORILY COMPLETED NEW MAIN IS TO BE CONNECTED TO TAPPING VALVE. TAPPING VALVE IS TO REMAIN CLOSED.
2. THE CONTRACTOR SHALL FLUSH LINE PRIOR TO STARTING THE CHLORINATION PROCEDURE. ALL FLUSHING SHALL BE DONE THROUGH THE TAPPING VALVE WITH ALL HYDRANTS AND SERICE LINES OPEN. E.C.U.A. INSPECTOR SHALL BE THE ONLY PERSON ALLOWED TO OPERATE THE VALVE AND SHALL BE PRESENT DURING FLUSHING OPERATION. ONCE FLUSHING IS COMPLETE THE INSPECTOR SHALL CLOSE THE VALVE.
3. ONCE SATISFACTORY BACTERIOLOGICAL SAMPLES ARE OBTAINED THE CONTRACTOR SHALL CLOSE BOTH CORPORATION STOPS AND REMOVE SERVICE TUBING, PUMP AND BACK FLOW PREVENTER; CAP CORPORATION STOPS WITH BRASS CAPS.
4. CONTRACTOR SHALL FURNISH ALL MATERIALS, EQUIPMENT AND LABOR NECESSARY FOR FILLING, CHLORINATING AND TESTING PROCEDURES. CONTRACTOR SHALL PROVIDE SAMPLING TAPS AT THOSE LOCATIONS APPROVED BY THE E.C.U.A. INSPECTOR. E.C.U.A. SHALL COLLECT TEST SAMPLES. CONTRACTOR IS RESPONSIBLE FOR PROPER DISPOSAL OF CHLORINATED WATER.

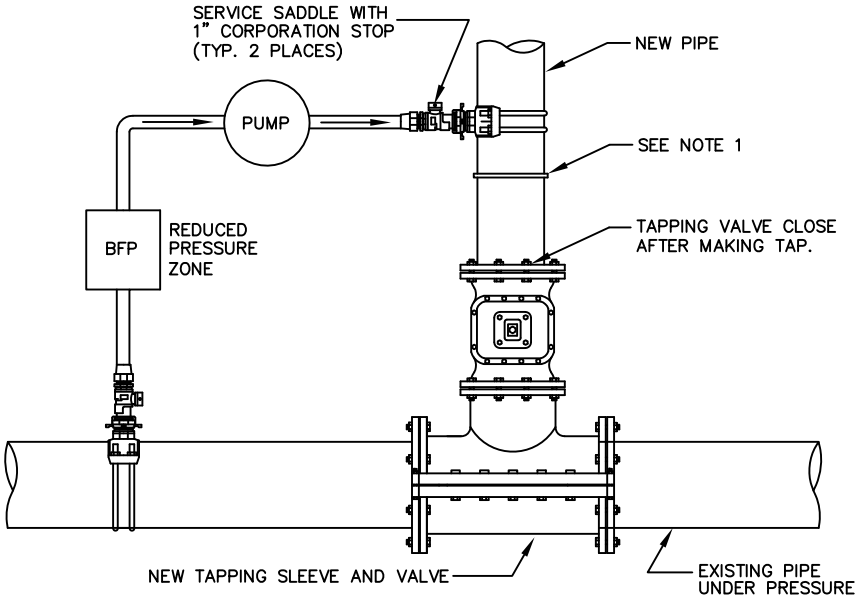


TYPICAL CONNECTION FOR NEW LINE FILLING, PRESSURE TESTING, FLUSHING AND CHLORINATION. (TAPPING SLEEVE AND VALVE)

ECUA EMERALD COAST UTILITIES AUTHORITY

DRAFT

SCALE: N.T.S.

DATE: 5/20/14

# TYPICAL CHLORINE DISINFECTION

DETAIL

D-41