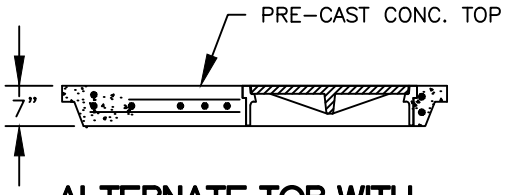

ALTERNATE TOP WITH INVERTED RING

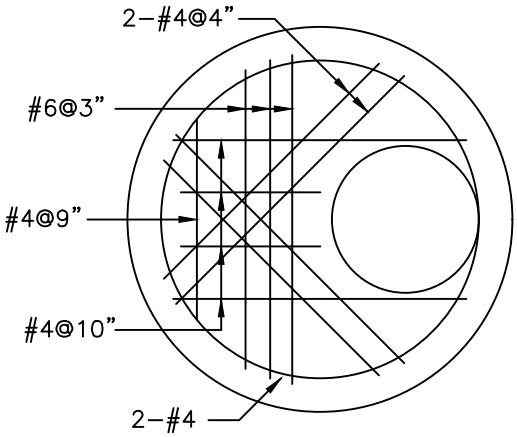

TOP REINFORCING

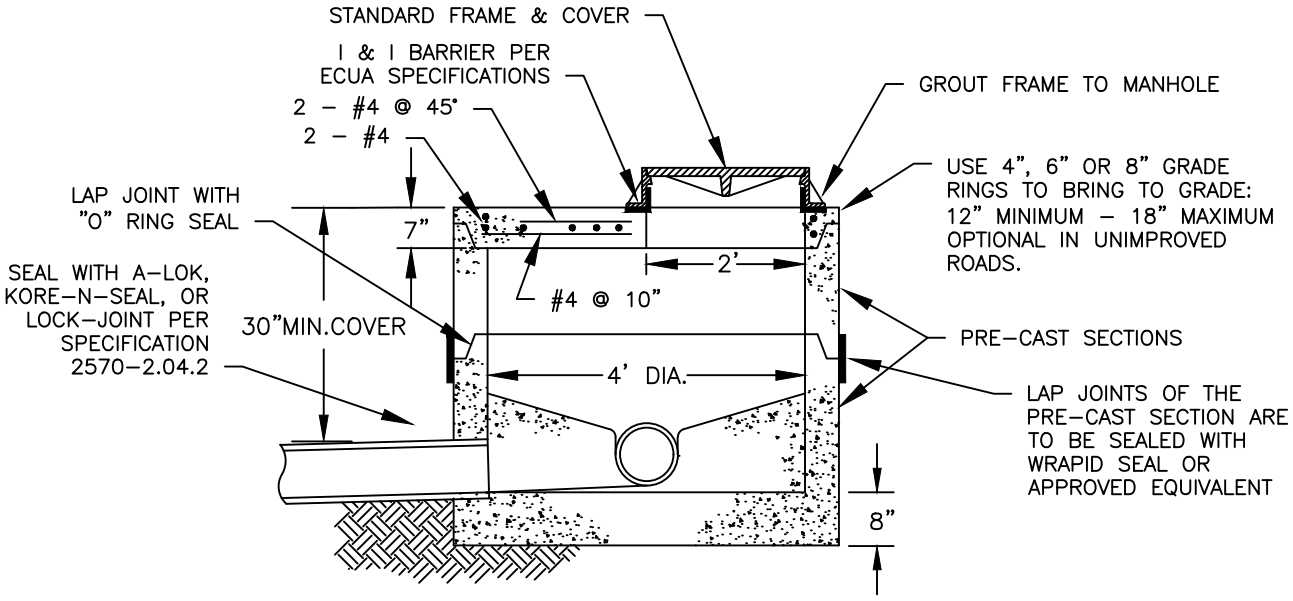

NOTES:

1. SEE SECTION 2570 FOR COMPLETE SPECIFICATIONS.
2. VACUUM TEST TO BE COMPLETED IN ACCORDANCE WITH ASTM C-1244 AND PERFORMED PRIOR TO BACKFILLING.
3. SUPPORTING SOILS UNDER THE BASE OF THE MANHOLE SHALL BE COMPACTED TO AT LEAST 98% OF MAXIMUM DENSITY.
4. JOINT SEALING WRAP SHALL BE INSTALLED ON ALL NEW MANHOLES. RISER SECTION SHALL ONLY BE WRAPPED WHEN MANHOLE IS LOCATED IN LOW AREAS OR AS DEEMED NECESSARY BY ENGINEER.

ECUA EMERALD COAST UTILITIES AUTHORITY

SCALE:	N.T.S.
DATE:	9/01/2016

SHALLOW MANHOLE

DETAIL

D-12