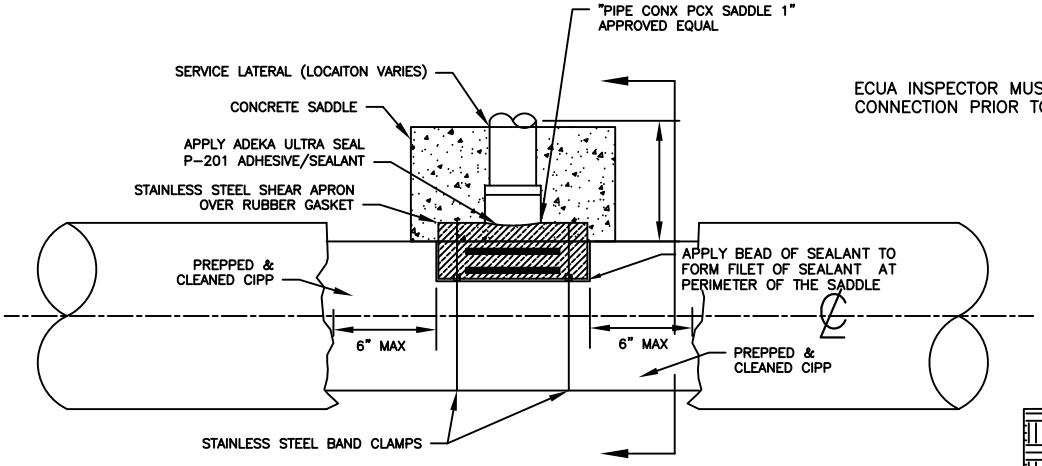

SERVICE CONNECTION TO CIPP LINED S.S. MAINS

ECUA INSPECTOR MUST APPROVE
CONNECTION PRIOR TO BACKFILLING

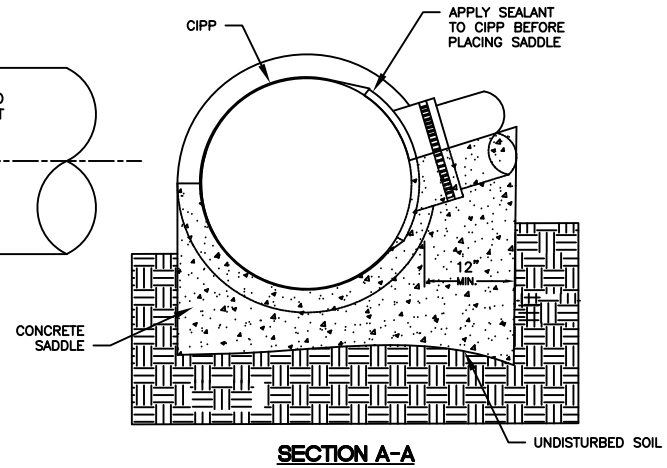

SECTION A-A

SERVICE CONNECTION NOTES:

1. REMOVE HOST PIPE FROM CIPP WITHOUT DAMAGING CIPP LINER.
2. THE LENGTH OF THE REMOVED HOST PIPE SHALL NOT EXCEED 6" BEYOND THE PERIMETER OF THE SADDLE. rEMOVEAL OF SOIL BENEATH THE PIPE SHALL BE MINIMAL.
3. FOR A NEW SERVICE INSTALLATION, A HOLE SAW OF PROPER DIAMETER FOR THE SADDLE SHALL BE USED TO CUT THE LINER. SEE SADDLE INSTALLATION DIRECTIONS FROM SADDLE MANUFACTURER TO IDENTIFY PROPER HOLE SIZE. IF THE LINER HAS A EXISTING CUT-OUT BY THE CIPP INSTALLER, MAKE THE CUT-OUT AS CIRCULAR AS POSSIBLE. THE EDGES OF ANY CUT IN THE LINER SHALL NOT BE JAGGED AND SHALL BE SANDED FREE OF BURRS OR ANY OTHER EXTRANEOUS MATERIAL. IF THE EXISTING CUT-OUT IN THE CIPP IS FOR WYE, IS OBLONG OR EXCEEDS 6.5" IN DIAMETER, A FITTING MUST BE CUT INTO THE CIPP FOR THE LATERAL INSTALLATION. DO NOT USE A SADDLE.
4. ALL SOIL, DEBRIS, OILS, LOOSE MATERIAL AND OTHER CONTAMINANTS SHALL BE REMOVED FROM THE CIPP LINER TO ENSURE PROPER ADHESION OF SEALANT. THE CIPP SHALL BE DRY WHEN SEALANT IS APPLIED.
5. PLACE THE SADDLE ON THE CIPP WITH THE SADDLE OPENING PROPERLY POSITIONED OVER THE CUT-OUT IN THE CIPP. ENSURE THE SADDLE IS CLEAN OF SOIL, DEBRIS, OILS, LOOSE MATERIAL, ETC. THE PROTRUDING RIDGE AROUND THE INSIDE OF THE SADDLE HOLE SHALL BE PLACED WITHIN THE CIPP CUT-OUT. THE RIDGE SHALL BE BEARING AGAINST THE BOTTOM OF THE CUT-OUT TO HELP PREVENT THE SADDLE FROM SLIPPING DOWNWARD. ONCE THE SADDLE IS POSITIONED, MARD ON THE CIPP THE OUTER PERIMETER OF THE SADDLE. REMOVE THE SADDLE.
6. APPLY ADEKA ULTRA SEAL P-201 ADHESIVE SEALANT (OR ENGINEER APPROVED EQUAL) TO THE SURFACE OF THE CIPP WITHIN THE MARKED PERIMETER ON THE PIPE. USE A TROWEL OR SOME OTHER TOOL TO COVER THE ENTIRE SURFACE WITHIN THE MARKED PERIMETER WITH ADHESIVE/SEALANT TO A THICKNESS NOT EXEEDING A QUARTER OF AN INCH (¼").
7. PLACE THE SADDLE ON THE CIPP IN THE LOCATION IDENTIFIED BY THE MARKED PERIMETER. INSTALL STIFFENER PLATE AND STAINLESS STEEL STRAPS. ENSURE STAINLESS STEEL STRAPS MEET TORQUE REQUIREMENTS FO SADDLE MANUFACTURER.
8. APPLY A BEAD OF ADHESIVE/SEALANT TO PERIMETER OF SADDLE TO FROM A FILLET AROUND THE PERIMETER OF THE SADDLE.
9. APPLY ADEKA ULTRA SEAL P-201 ADHESIVE/SEALANT 5200 TO THE OUTSIDE OF THE SPICKET END OF THE LATERAL, THEN INSERT THE LATERAL INTO THE BELL OF THE TEE-SADDLE.
10. AFTER LATERAL PIPE IS CONNCETED TO SADDLE AND ON PROPER GRADE, POUR A CONCRETE SADDLE UNDER THE MAIN PIPE AND THE LATERAL CONNECTION AS SHOWN. CONCRETE SHALL BE THOROUGHLY MIXED WITH WATER BEFORE PLACEMENT. POURING DRY MIX INTO EXCAVATION AND WETTING WITH WATER AFTERWARD IS UNACCEPTABLE.
11. ALLOW ADEQUATE TIME, PER MANUFACTURER'S RECOMMENDATION, FOR SEALANT TO CURE AND CONCRETE SET BEFORE BACKFILLING EXCAVATION.

ECUA
EMERALD COAST
UTILITIES AUTHORITY

PROPOSED

SCALE: N.T.S.
DATE: 12/18/14

LATERAL CONNECTION TO CIPP-LINED PIPE

DETAIL
D-67