ALL WORK SHALL BE CONSTRUCTED IN ACCORDANCE WITH THE LATEST EDITION OF THE E.C.U.A. STANDARD SPECIFICATIONS

240-208V 3ø 20HP - 25HP REDUCED VOLTAGE SOFT STARTER ELECTRICAL STANDARD

FOR

EMERALD COAST UTILITIES AUTHORITY
ESCAMBIA COUNTY, FL

SHEET NO.	SHEET DESCRIPTION
1	MAIN POWER DISTRIBUTION SCHEMATIC
2	CONTROL SCHEMATIC
3	DIGITAL INPUTS SCHEMATIC
4	DIGITAL OUTPUTS & ANALOG INPUTS SCHEMATIC
5	ANALOG OUTPUTS & STARTER CONTROL SCHEMATIC
6	TERMINAL BLOCK LAYOUT AND FIELD CONNECTIONS
7	LINEAR EXTERIOR PANEL LAYOUT & FIELD CONDUIT REQUIREMENTS
8	POWER & PUMP 1 INTERNAL PANEL LAYOUTS
9	PUMP 2 & CONTROL PANEL INTERNAL LAYOUTS
10	EQUIPMENT LIST
11	HORSEPOWER RELATED EQUIPMENT & POWER CONDUCTORS
12	PANEL TO PANEL CONDUCTORS & EQUIPMENT
13	PANEL TO PANEL WIRING
14	LINEAR STAINLESS STEEL FRAME LAYOUT
15	TABLES, LEGENDS & TAGS
16	ISR INSTRUCTIONS
17	GENERAL NOTES AND DETAILS
18	GENERAL NOTES AND DETAILS

REVISIONS	BY

IMPROVEMENTS TO WASTEWATER COLLECTION SYSTEM

LIFT STATION CONSTRUCTION DETAILS

ELECTRICAL STANDARDS

EMERALD COAST UTILITIES AUTHORITY

APPROVED BY:

Drawn:

Designed:

Checked:

Date: 12/18/2014

Scale:

Project No:

Sheet No. 0

Of 18 Sheets

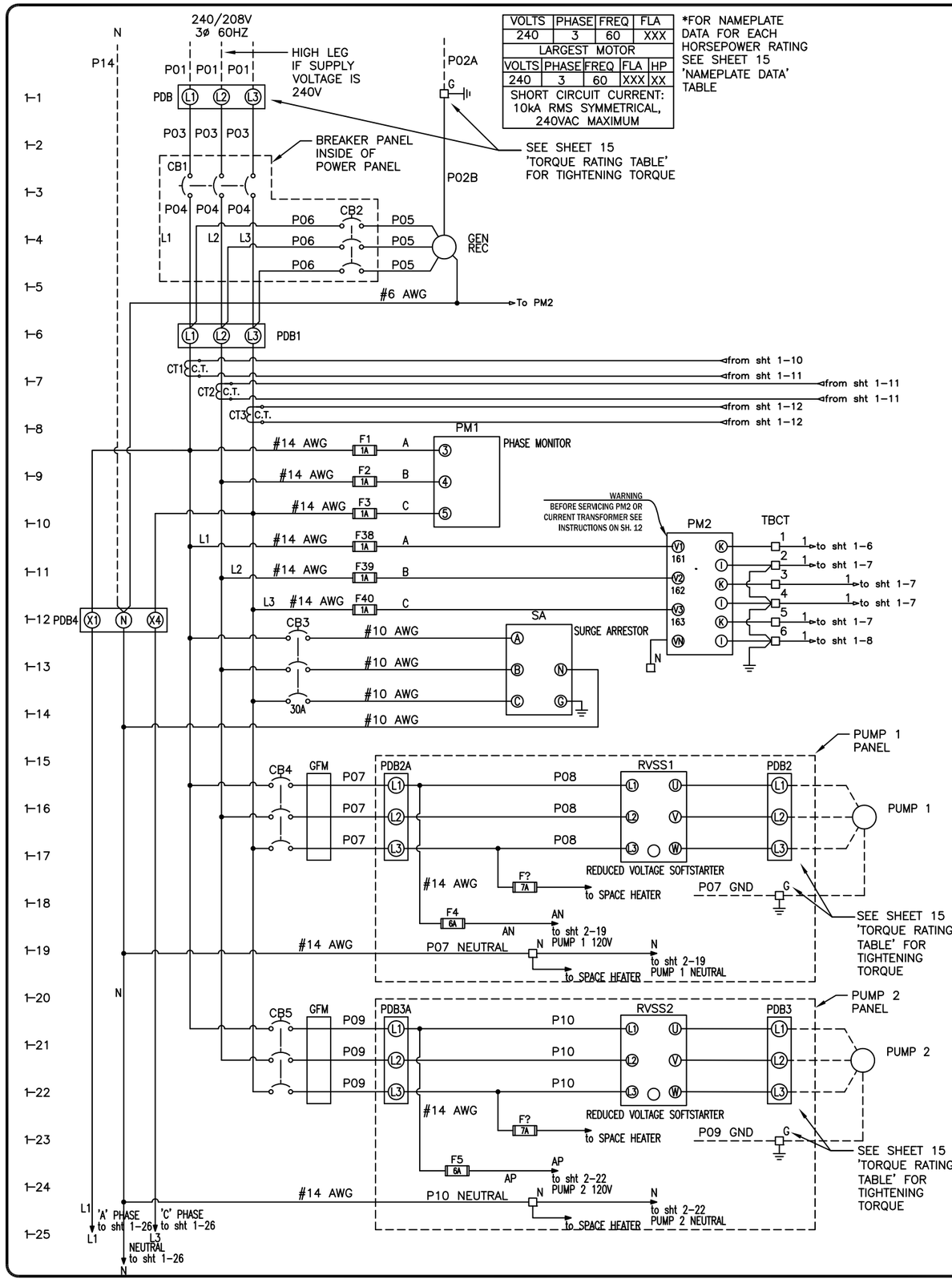

VOLTS	PHASE	FREQ	FLA
240	3	60	XXX
LARGEST MOTOR			
VOLTS	PHASE	FREQ	FLA	HP
240	3	60	XXX	XX
SHORT CIRCUIT CURRENT: 10kA RMS SYMMETRICAL, 240VAC MAXIMUM				

*FOR NAMEPLATE DATA FOR EACH HORSEPOWER RATING SEE SHEET 15 'NAMEPLATE DATA' TABLE

ALL WORK SHALL BE CONSTRUCTED IN ACCORDANCE WITH THE LATEST EDITION OF THE E.C.U.A. STANDARD SPECIFICATIONS

NOTES:

1. THE COMPLETED CONTROL PANEL SHALL BE LABELED AND MANUFACTURED TO MEET U.L. 508A AND 698A CERTIFICATION.
2. CONTROL PANEL WIRING SHALL BE STRANDED COPPER, MINIMUM SIZE #16 AWG WITH 600V 90DEGREE C TYPE THHN INSULATION.
3. CONTROL PANEL WIRING SHALL BE NUMBERED AT BOTH ENDS WITH TYPE WRITTEN, HEAT SHRINKABLE WIRE MARKERS.
4. ALL WIRING WITHIN THE CONTROL PANEL SHALL BE COLOR CODED OR CODED USING ELECTRICAL TAPE IN SIZES WHERE COLORED INSULATION IS NOT AVAILABLE. THE FOLLOWING CODING SHALL BE USED:
   - 4.1. UNGROUNDED AC CONDUCTORS AT SUPPLY VOLTAGE – BLACK
   - 4.2. GROUNDED AC CURRENT CARRYING CONDUCTORS – WHITE
   - 4.3. UNGROUNDED AC CONDUCTORS BELOW SUPPLY VOLTAGE – RED
   - 4.4. UNGROUNDED AC CONTROL CONDUCTORS & CONDUCTORS THAT REMAIN ENERGIZED WHEN THE MAIN DISCONNECT IS OFF – YELLOW
   - 4.5. UNGROUNDED DC CONTROL CONDUCTORS – ORANGE
   - 4.6. GROUNDED DC CURRENT CARRYING CONDUCTORS – BROWN
   - 4.7. INTRINSICALLY SAFE WIRING – BLUE
   - 4.8. GROUND CONDUCTORS – GREEN
5. SEE SHEETS 11 & 12 FOR DETAILS REGARDING ALL POWER CONDUCTORS LABELED PXX.
6. SEE SHEET 11 'HORSEPOWER RELATED COMPONENTS EQUIPMENT LIST' FOR RATINGS OF OVERCURRENT PROTECTION DEVICES.

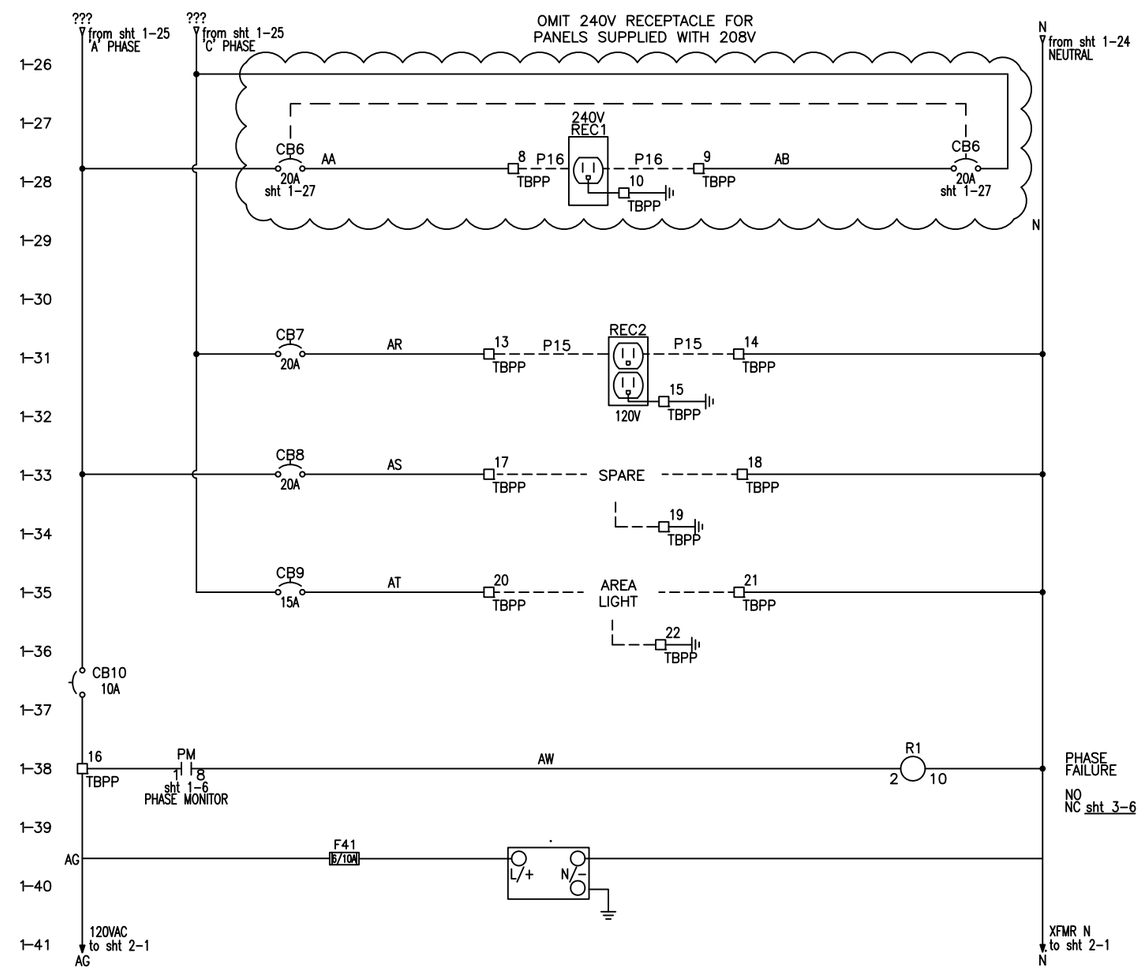

REVISIONS	BY

IMPROVEMENTS TO WASTEWATER COLLECTION SYSTEM

LIFT STATION CONSTRUCTION DETAILS

ELECTRICAL STANDARDS

EMERALD COAST UTILITIES AUTHORITY

APPROVED BY:

Drawn:	
Designed:	
Checked:	
Date:	12/18/2014
Scale:	
Project No:	
Sheet No.	1
	Of 18 Sheets

ALL WORK SHALL BE CONSTRUCTED IN ACCORDANCE WITH THE LATEST EDITION OF THE E.C.U.A. STANDARD SPECIFICATIONS

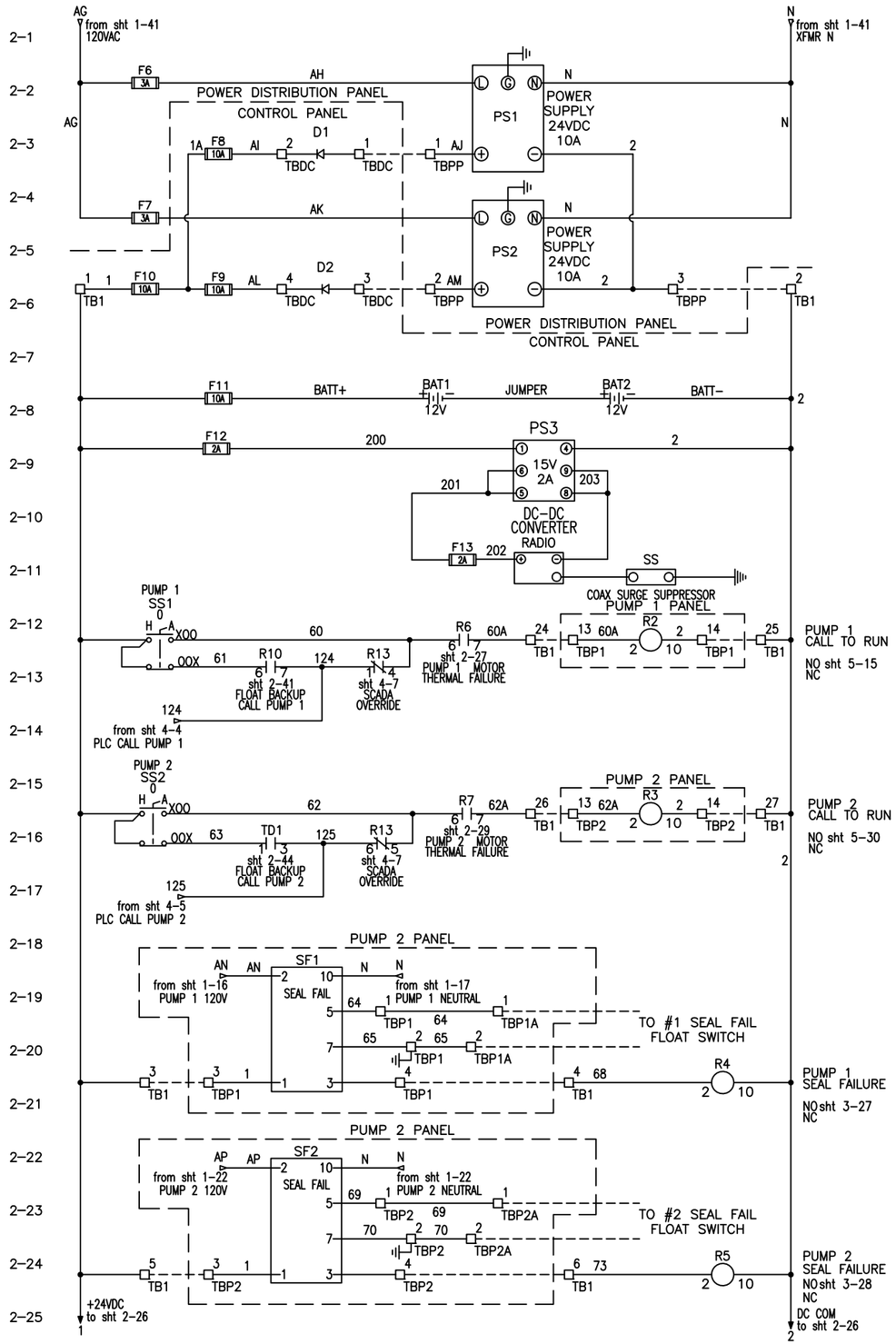

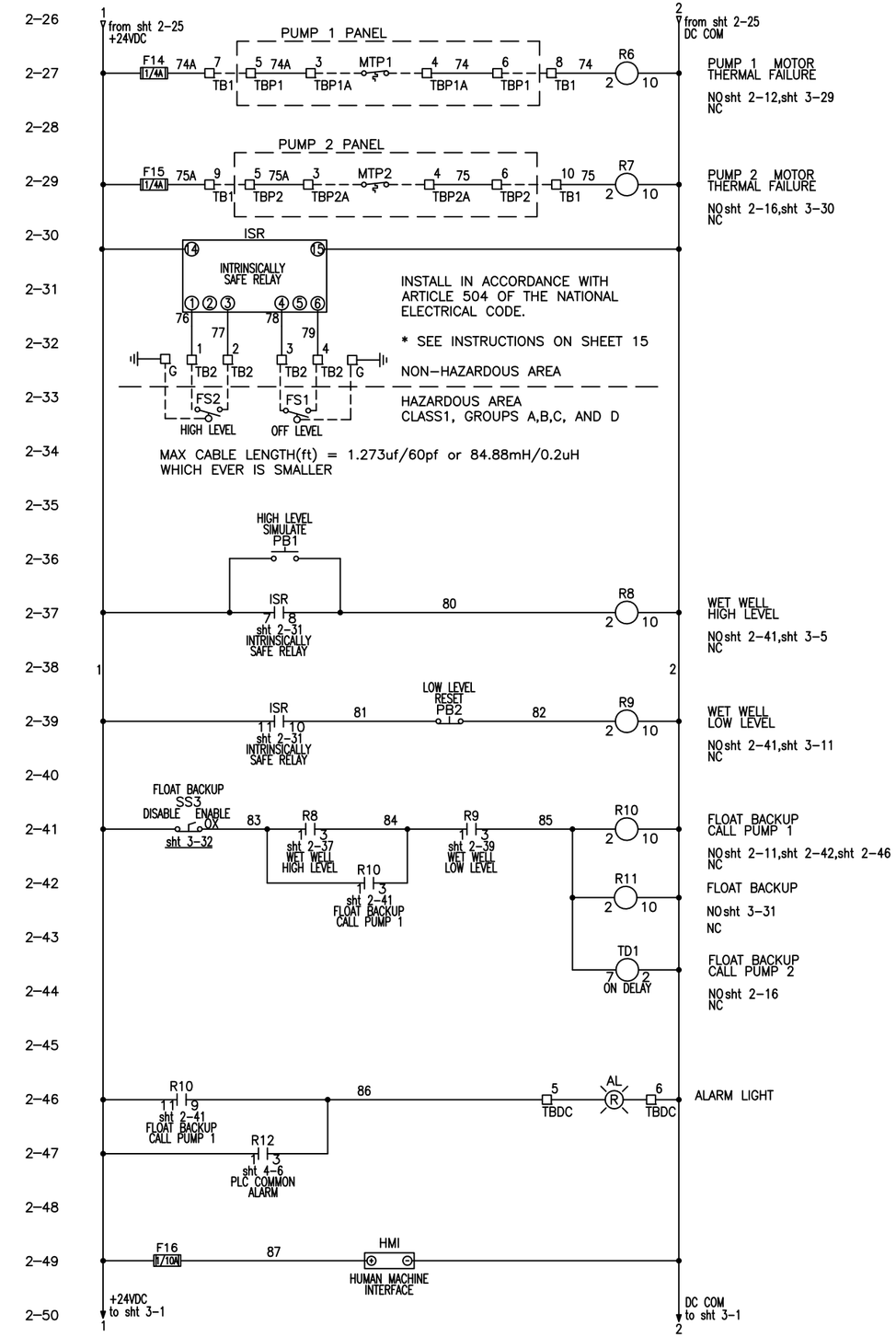

REVISIONS	BY

IMPROVEMENTS TO WASTEWATER COLLECTION SYSTEM
LIFT STATION CONSTRUCTION DETAILS
ELECTRICAL STANDARDS

EMERALD COAST UTILITIES AUTHORITY

APPROVED BY:

Drawn:	
Designed:	
Checked:	
Date:	12/18/2014
Scale:	
Project No:	
Sheet No.	2
	Of 18 Sheets

ALL WORK SHALL BE CONSTRUCTED IN ACCORDANCE WITH THE LATEST EDITION OF THE E.C.U.A. STANDARD SPECIFICATIONS

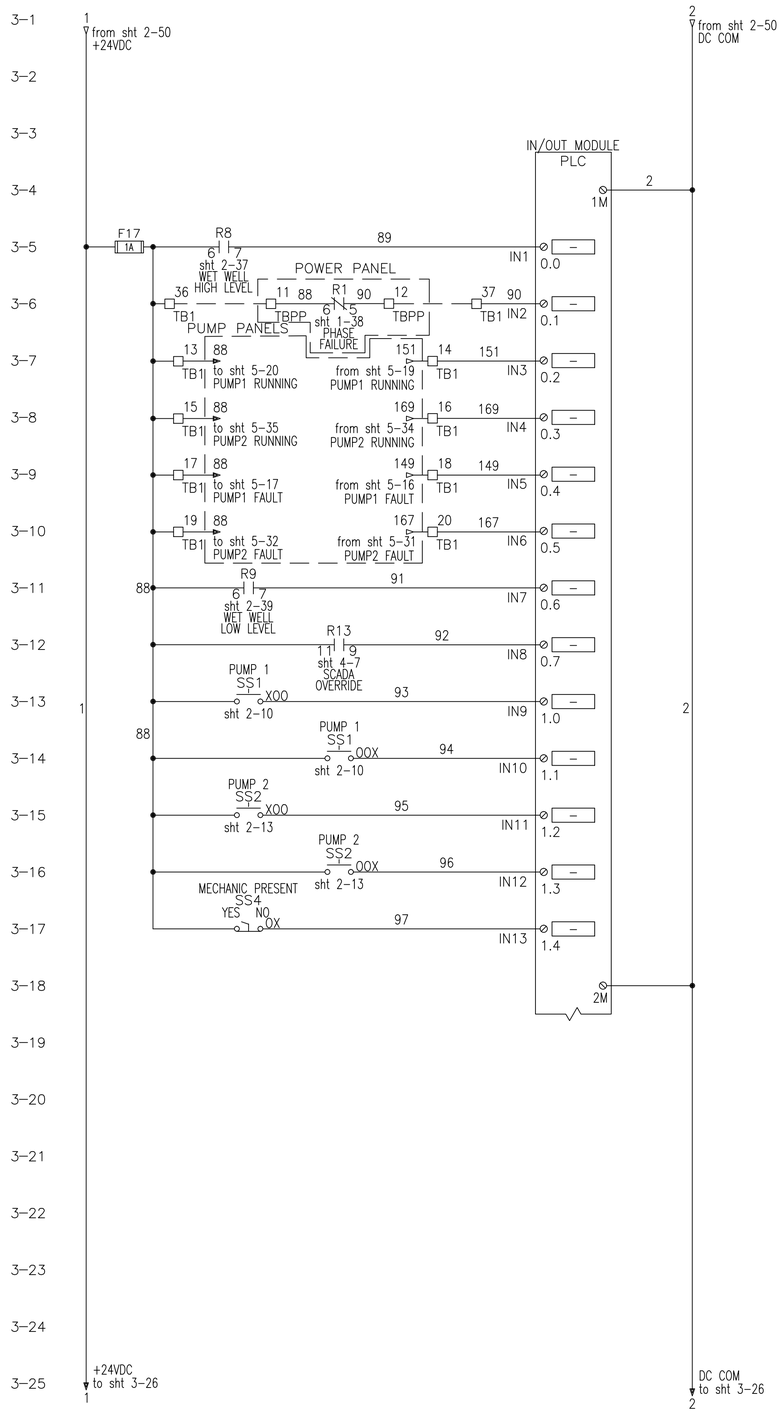

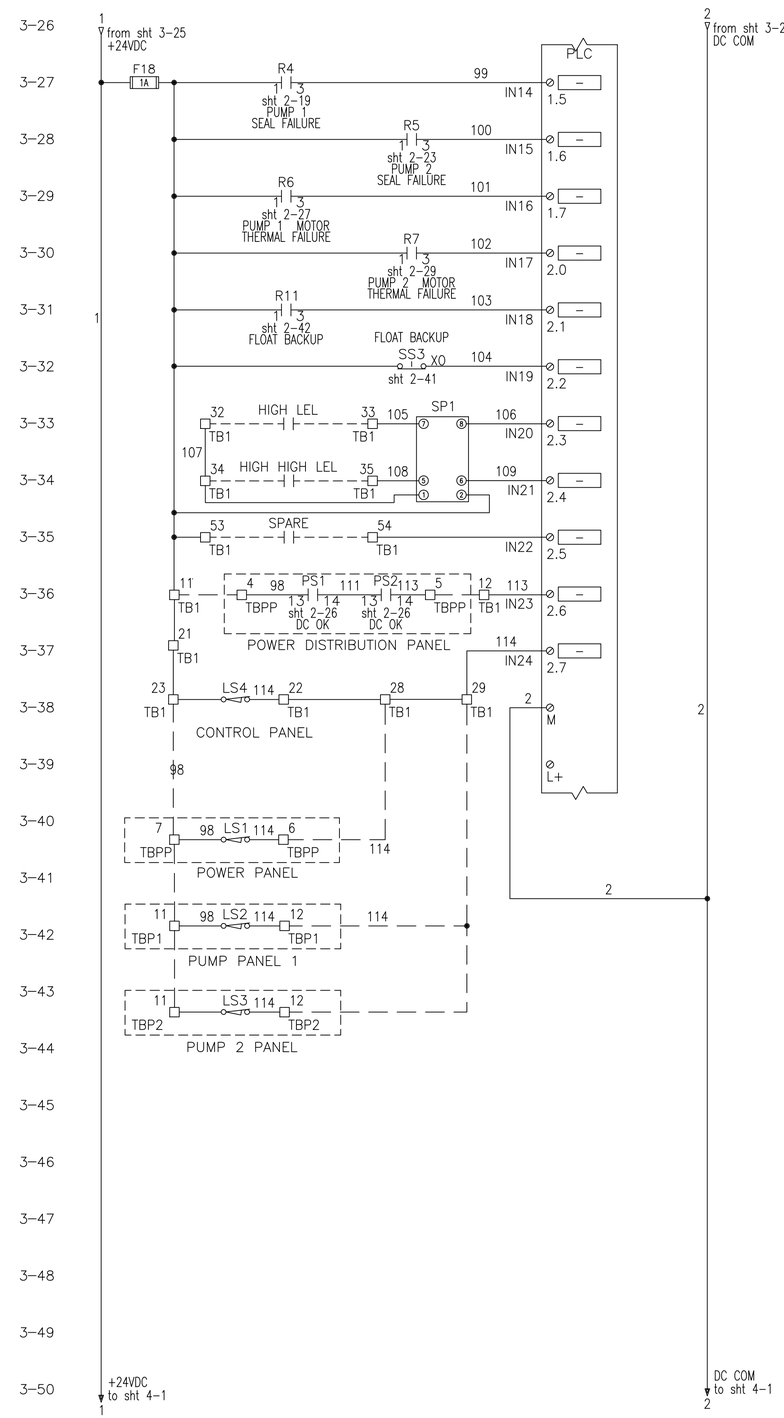

REVISIONS	BY

IMPROVEMENTS TO WASTEWATER COLLECTION SYSTEM

LIFT STATION CONSTRUCTION DETAILS

GENERAL NOTES AND DETAILS

ECUA EMERALD COAST UTILITIES AUTHORITY

APPROVED BY:

Drawn:
Designed:
Checked:
Date: PROTOTYPE
Scale:
Project No:
Sheet No. 3
Of 17 Sheets

ALL WORK SHALL BE CONSTRUCTED IN ACCORDANCE WITH THE LATEST EDITION OF THE E.C.U.A. STANDARD SPECIFICATIONS

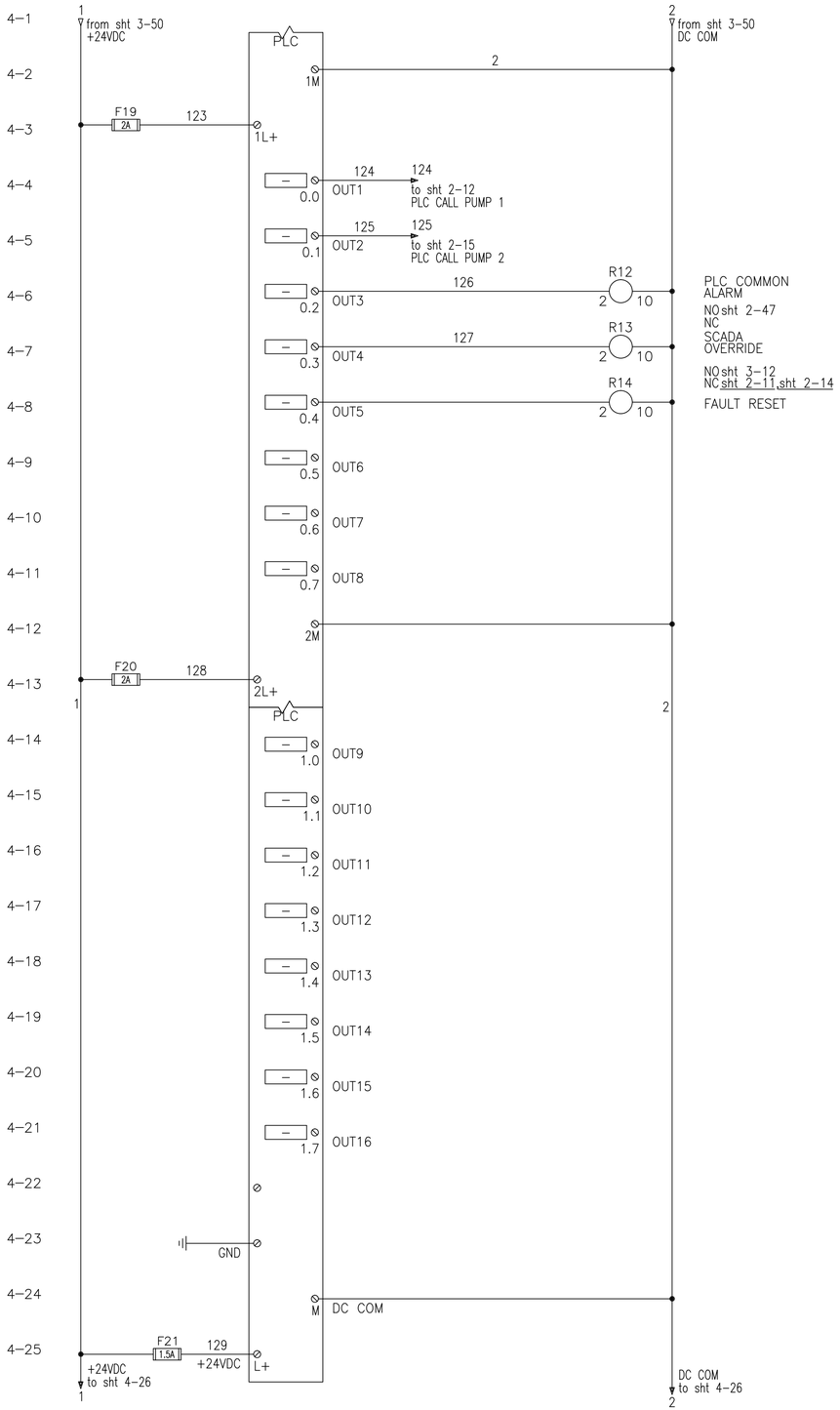

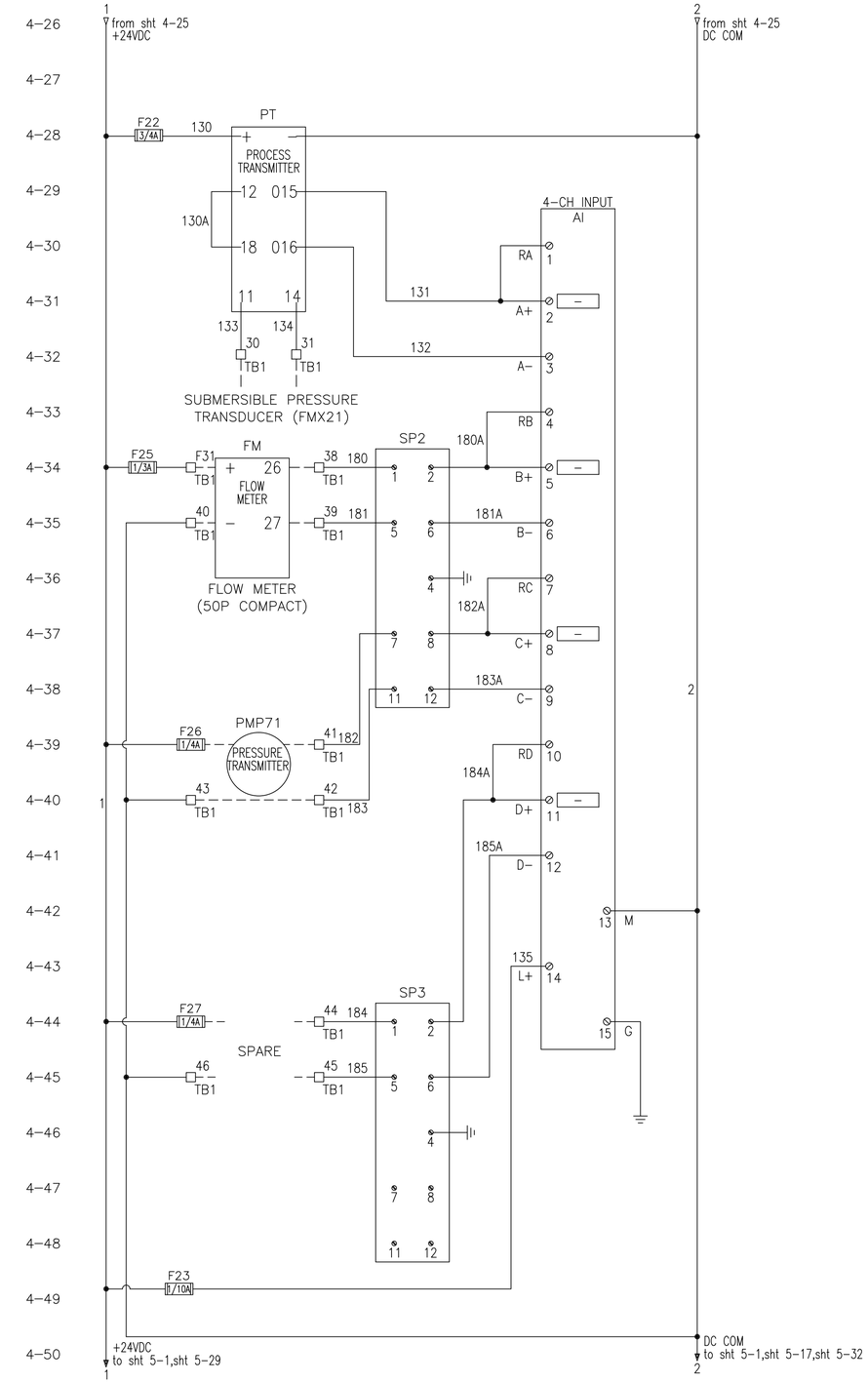

REVISIONS	BY

IMPROVEMENTS TO WASTEWATER COLLECTION SYSTEM

LIFT STATION CONSTRUCTION DETAILS

GENERAL NOTES AND DETAILS

ECUA
EMERALD COAST UTILITIES AUTHORITY

APPROVED BY:

Drawn:
Designed:
Checked:
Date: PROTOTYPE
Scale:
Project No:
Sheet No. 4
Of 17 Sheets

ALL WORK SHALL BE CONSTRUCTED IN ACCORDANCE WITH THE LATEST EDITION OF THE E.C.U.A. STANDARD SPECIFICATIONS

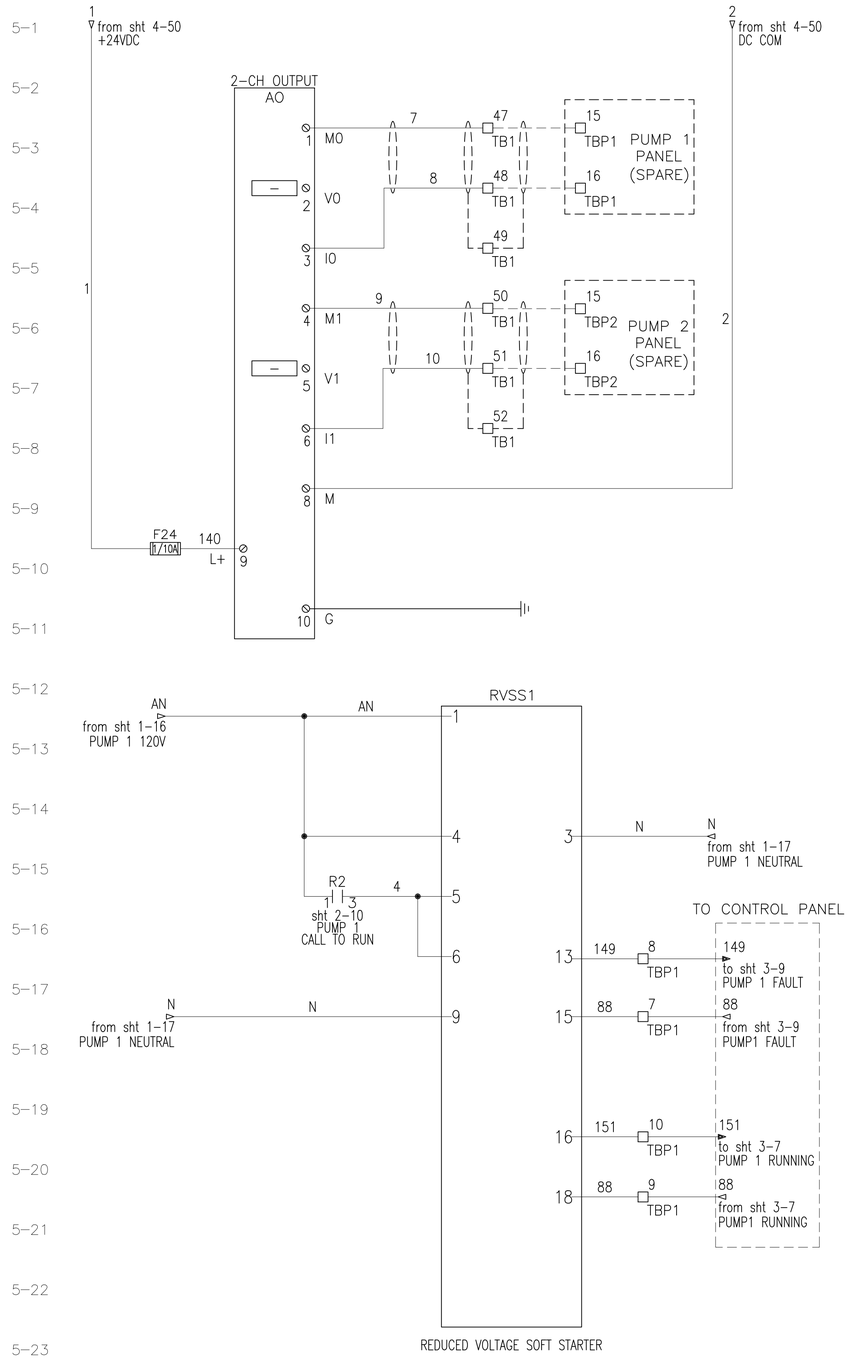

RVSS PARAMETERS
FAULT PARAMETERS –
FAULT RESET = YES

I/O PROGRAMMING PARAMETERS–
FAULT RELAY TYPE = FAILSAFE

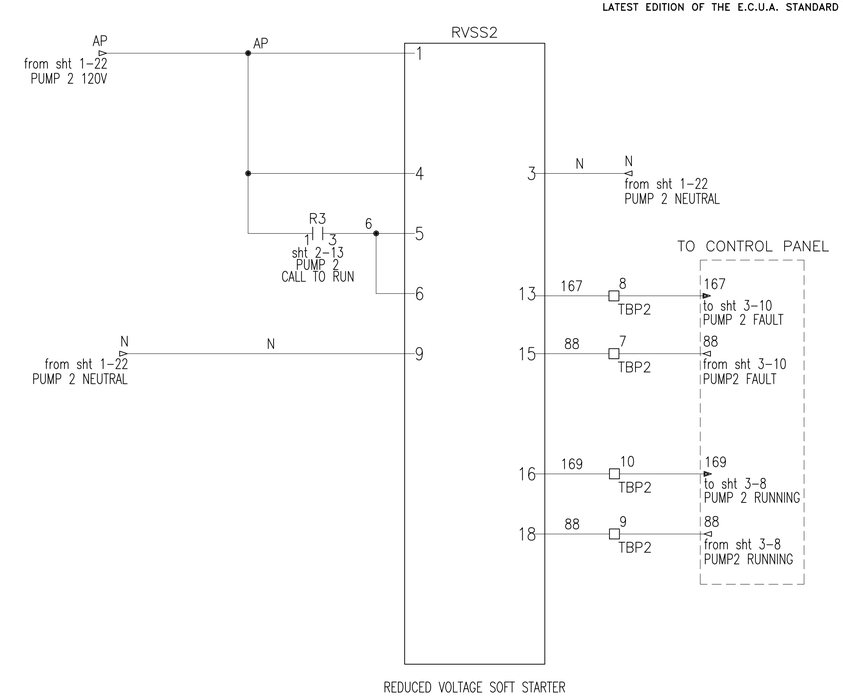

RVSS PARAMETERS
FAULT PARAMETERS –
FAULT RESET = YES

I/O PROGRAMMING PARAMETERS–
FAULT RELAY TYPE = FAILSAFE

REVISIONS	BY

IMPROVEMENTS TO WASTEWATER COLLECTION SYSTEM

LIFT STATION CONSTRUCTION DETAILS

GENERAL NOTES AND DETAILS

ECUA
EMERALD COAST UTILITIES AUTHORITY

APPROVED BY:

Drawn:
Designed:
Checked:
Date: PROTOTYPE
Scale:
Project No:
Sheet No. 5
Of 17 Sheets

ALL WORK SHALL BE CONSTRUCTED IN ACCORDANCE WITH THE LATEST EDITION OF THE E.C.U.A. STANDARD SPECIFICATIONS

TBPP

AJ	1	
AM	2	
2	3	
	4	
113	5	
114	6	
	7	
AA	8	
AB	9	
	10	
88	11	
90	12	
AR	13	
N	14	
	15	
AG;AG	16	
AS	17	
N	18	
	19	
AT	20	
N	21	
	22	

NOTE: THE TBCT FOR PM2 NEEDS TO INTEGRATED INTO THE POWER PANEL. CONFER WITH THE PROJECT ENGINEER.

POWER PANEL

TB1

1;1	1	
	1	
	1	
	1	
	1	
2	2	
	2	
	2	
	2	
	2	
1;1	3	
68	4	
1;1	5	
73	6	
74A	7	
74	8	
75A	9	
75	10	
	11	
113	12	
88;88	13	
151	14	
88;88	15	
169	16	
88;88	17	
149	18	
88;88	19	
167	20	
	21	
114	22	
	23	
60A	24	
2;2	25	
62A	26	
2;2	27	
114;114	28	
114;114	29	
133	30	SUBMERSIBLE PRESSURE TRANSDUCER (FMX167)
134	31	HIGH LEL
107	32	
105	33	HIGH HIGH LEL
107	34	
108	35	
88;88	36	
90	37	
180	38	FLOW METER (50P COMPACT) (4–20mA SIGNAL)
181	39	
	F29	FLOW METER (50P COMPACT) (POWER)
2	40	
182	41	
183	42	
	F30	
2	43	
184	44	
185	45	
	F31	
2	46	
7	47	
8	48	
	49	
9	50	
10	51	
	52	
	53	
	54	
	55	PRESSURE TRANSMITTER (PMP71) (4–20mA SIGNAL)
	56	

CONTROL PANEL

TB2

76	1	sht 2–34 HIGH LEVEL FS2
77	2	
	G	
78	3	sht 2–34 OFF LEVEL FS1
79	4	
	G	

TBDC

	1	
AI	2	
	3	
AL	4	
86;86	5	
2;2	6	

TBP1

64	1	
65	2	
1	3	
68	4	
74A	5	
74	6	
88	7	
149	8	
88	9	
151	10	
	11	
114;114	12	
60A	13	
2	14	
7	15	
8	16	

TBP1A

64	1	TO #1 SEAL FAIL FLOAT SWITCH
74A	3	
65	2	sht 2–27 MTP1
74	4	

PUMP 1 PANEL

TBP2

69	1	
70	2	
1	3	
73	4	
75A	5	
75	6	
88	7	
167	8	
88	9	
169	10	
	11	
114	12	
62A	13	
2	14	
9	15	
10	16	

TBP2A

69	1	TO #2 SEAL FAIL FLOAT SWITCH
75A	3	
70	2	sht 2–29 MTP2
75	4	

PUMP 2 PANEL

TYPICAL FOR ALL TERMINAL BLOCKS ON THIS DRAWING

USE COPPER CONDUCTORS ONLY
75 DEG C (167 DEG F)
5.3–7.0 LB/IN TIGHTENING TORQUE

NOTES:

TERMINAL BLOCK DESIGNATIONS:

- TBPP – POWER PANEL TERMINAL BLOCK
- TB1 – CONTROL PANEL TERMINAL BLOCK
- TB2 – INTRINSICALLY SAFE TERMINAL BLOCK
- TBP1 – PUMP 1 TERMINAL BLOCK
- TBP1A – PUMP 1 TERMINAL BLOCK (MOTOR THERMAL AND SEAL FAILURE)
- TBP2 – PUMP 2 TERMINAL BLOCK
- TBP2A – PUMP 2 TERMINAL BLOCK (MOTOR THERMAL AND SEAL FAILURE)

REVISIONS	BY

IMPROVEMENTS TO WASTEWATER COLLECTION SYSTEM

LIFT STATION CONSTRUCTION DETAILS

ELECTRICAL STANDARDS

ECUA
EMERALD COAST UTILITIES AUTHORITY

APPROVED BY:

Drawn:	
Designed:	
Checked:	
Date:	12/18/2014
Scale:	
Project No:	
Sheet No.	6
	OF 18 Sheets

ALL WORK SHALL BE CONSTRUCTED IN ACCORDANCE WITH THE LATEST EDITION OF THE E.C.U.A. STANDARD SPECIFICATIONS

NOTES

1. SEE SHEET 15 FOR SCHEDULES, LEGENDS AND PANEL TAGS.
2. GENERATOR RECEPTACLE TO BE ON SAME SIDE AS THE DRIVEWAY.

ATTENTION

THIS LAYOUT IS ONE OF TWO (2) POSSIBLE CHOICES – SEE SHEET 7A FOR THE OTHER OPTION. IF THIS LAYOUT OPTION IS SELECTED, SEE SHEET 14 FOR ASSOCIATED RACK DETAILS.

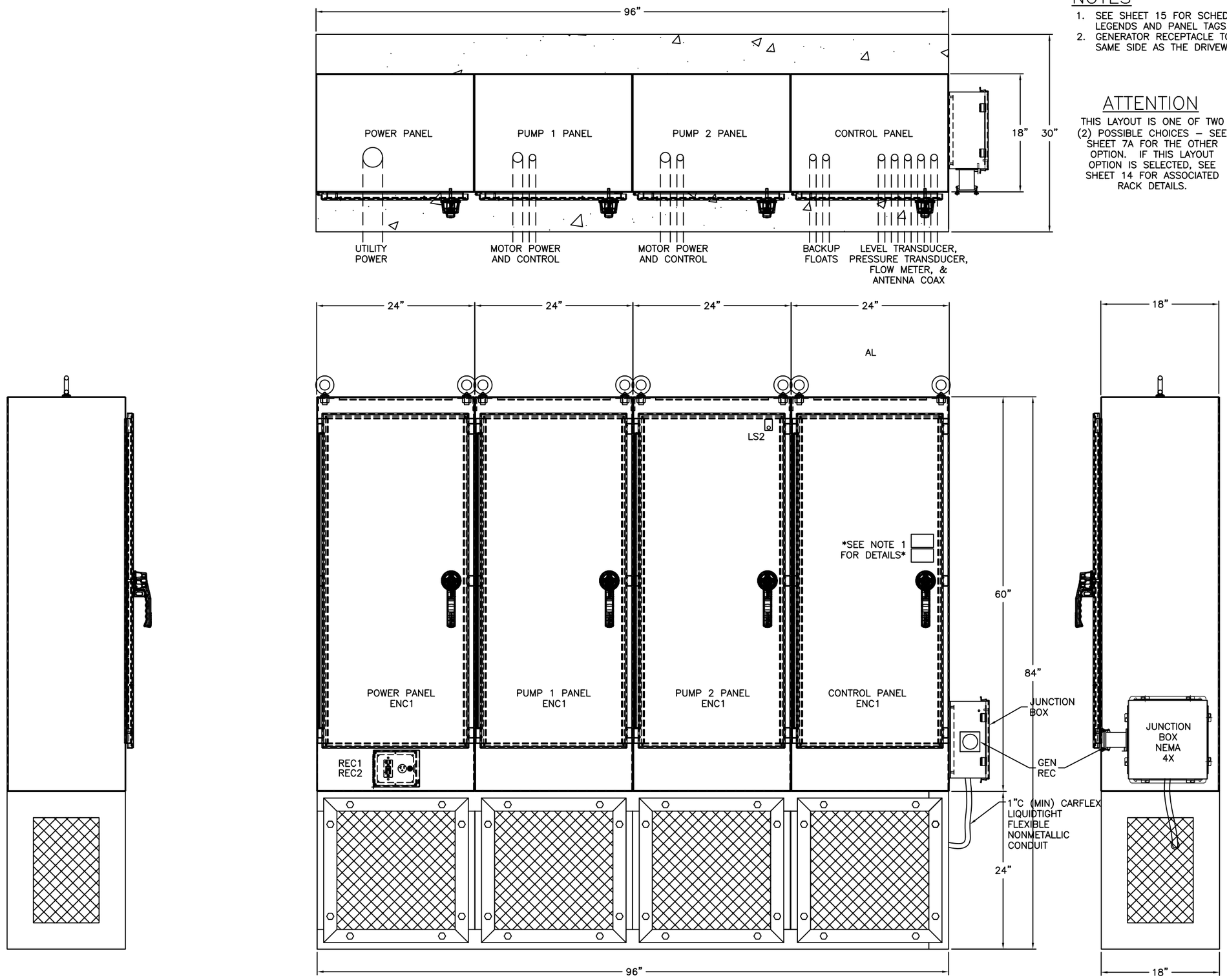

REVISIONS	BY

IMPROVEMENTS TO WASTEWATER COLLECTION SYSTEM

LIFT STATION CONSTRUCTION DETAILS

ELECTRICAL STANDARDS

EMERALD COAST UTILITIES AUTHORITY

APPROVED BY:

Drawn:	
Designed:	
Checked:	
Date:	12/18/2014
Scale:	
Project No:	
Sheet No.	7
	Of 18 Sheets

ALL WORK SHALL BE CONSTRUCTED IN ACCORDANCE WITH THE LATEST EDITION OF THE E.C.U.A. STANDARD SPECIFICATIONS

NOTES

1. SEE SHEET 15 FOR SCHEDULES, LEGENDS AND PANEL TAGS.
2. LAYOUT OF THE POWER & STARTER SECTIONS DEPICTS THE LARGEST POSSIBLE HORSEPOWER CONFIGURATION.

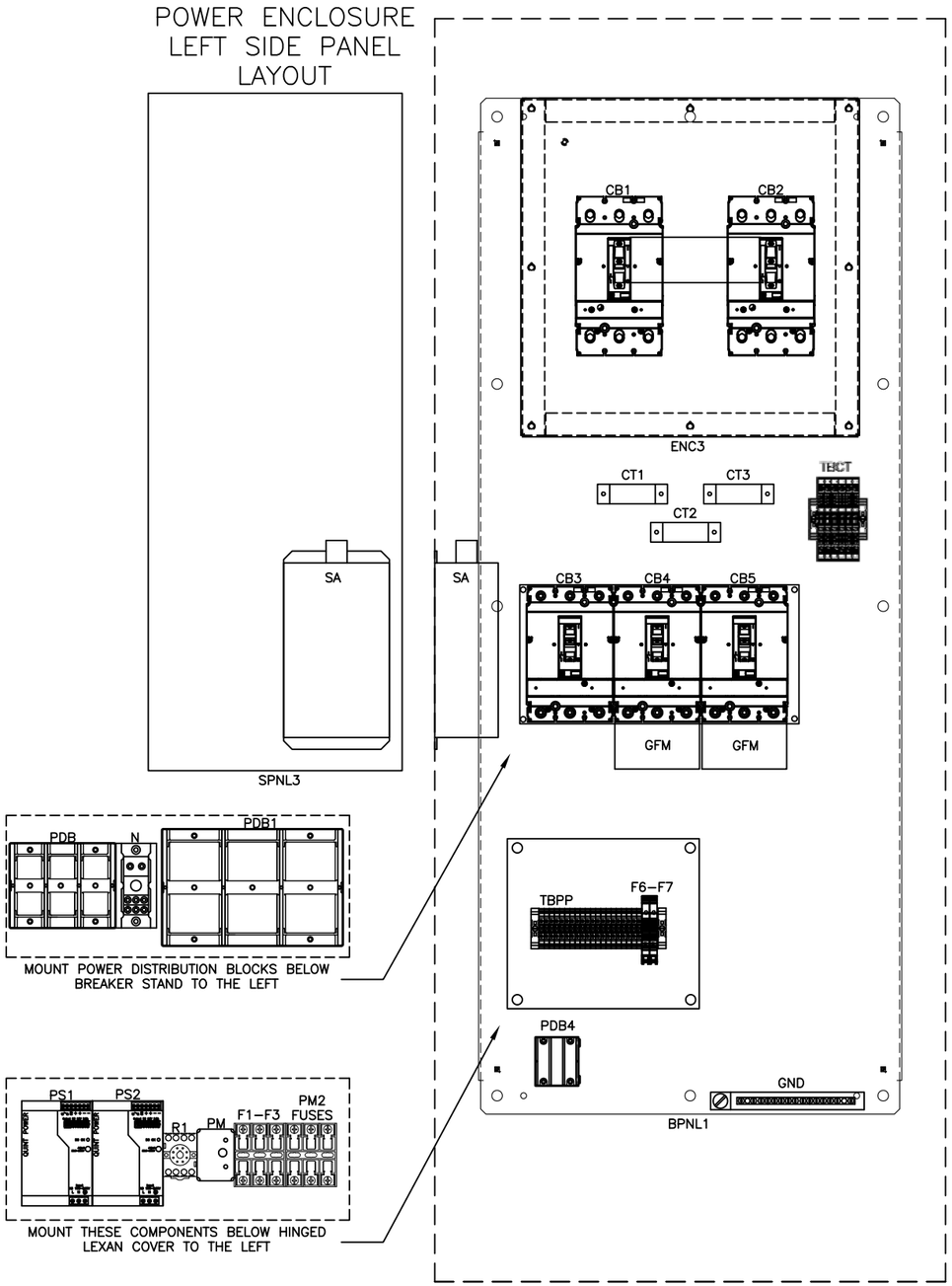

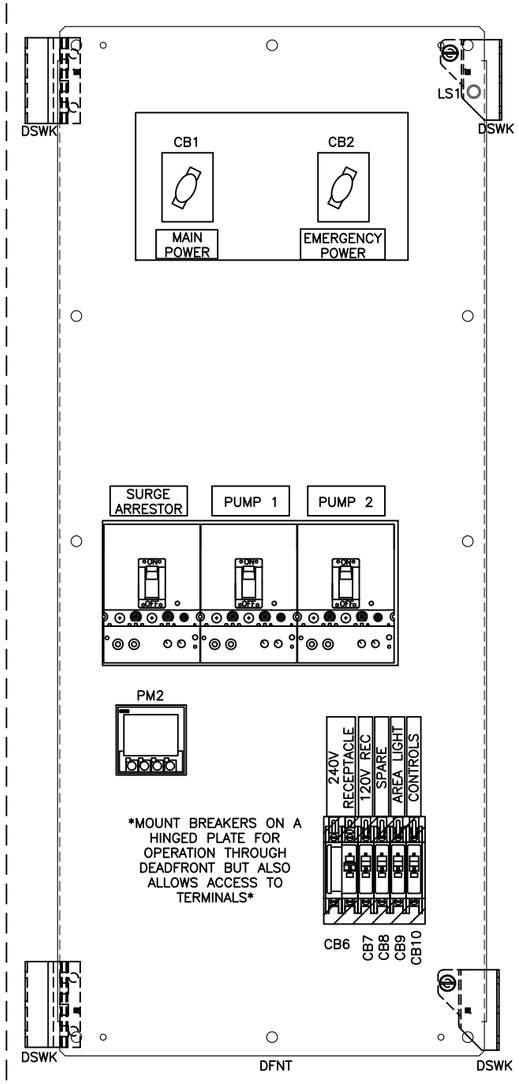

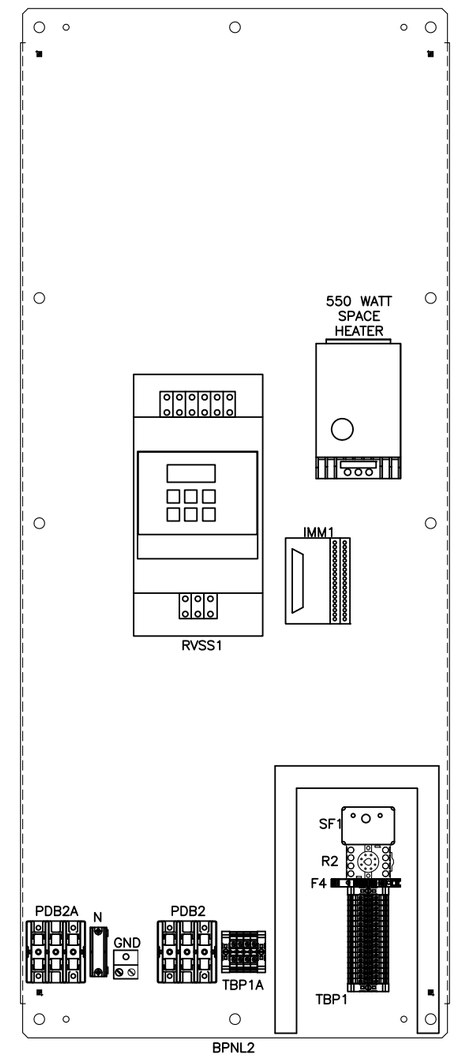

REVISIONS	BY

IMPROVEMENTS TO WASTEWATER COLLECTION SYSTEM

LIFT STATION CONSTRUCTION DETAILS

ELECTRICAL STANDARDS

EMERALD COAST UTILITIES AUTHORITY

APPROVED BY:

Drawn:	
Designed:	
Checked:	
Date:	12/18/2014
Scale:	
Project No:	
Sheet No.	8
	Of 18 Sheets

ALL WORK SHALL BE CONSTRUCTED IN ACCORDANCE WITH THE LATEST EDITION OF THE E.C.U.A. STANDARD SPECIFICATIONS

NOTES

1. SEE SHEET 15 FOR SCHEDULES, LEGENDS AND PANEL TAGS.
2. LAYOUT OF THE VFD SECTION DEPICTS THE LARGEST POSSIBLE HORSEPOWER CONFIGURATION.

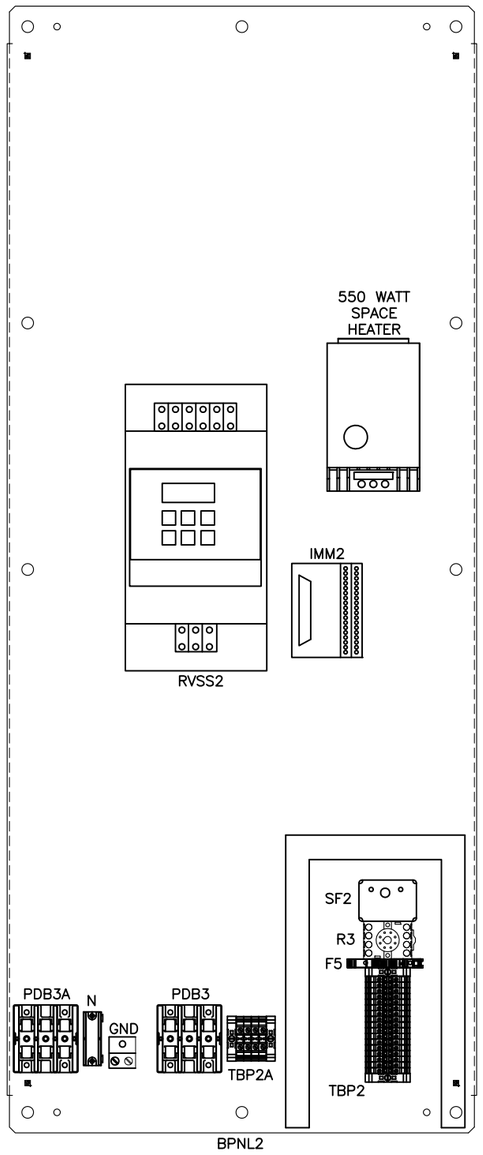

PUMP 2 ENCLOSURE
BACKPANEL LAYOUT

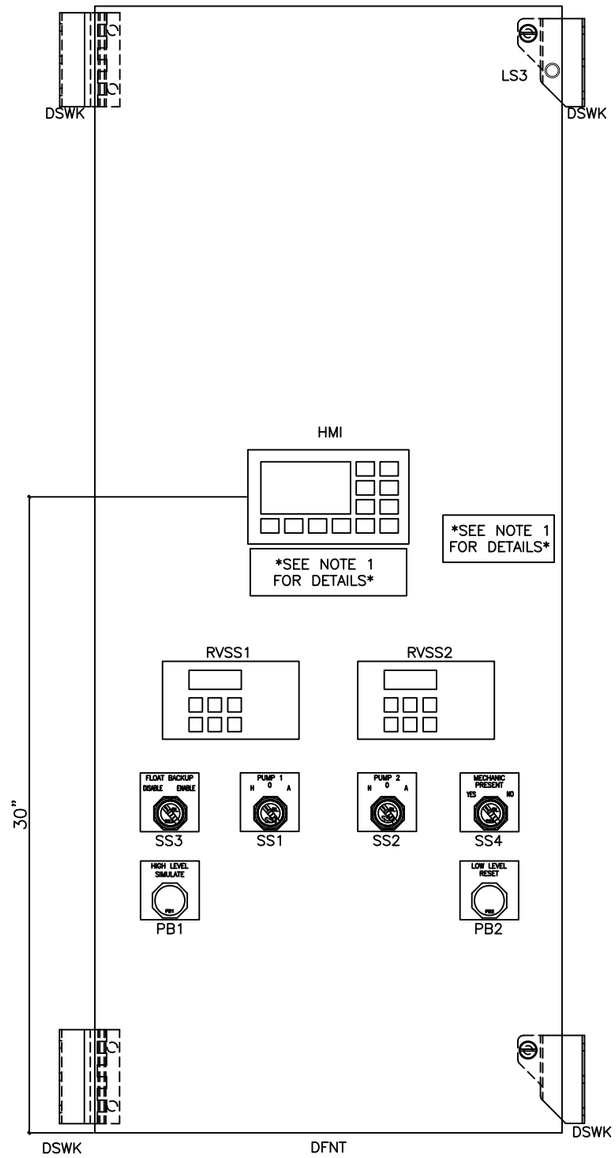

CONTROL ENCLOSURE
DEADFRONT LAYOUT

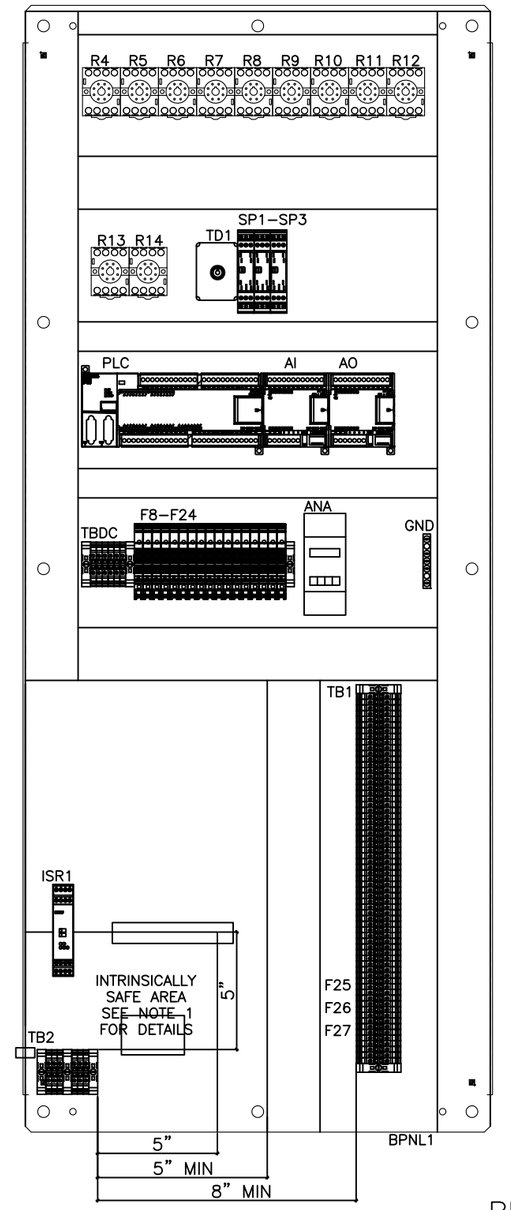

CONTROL ENCLOSURE
BACKPANEL LAYOUT

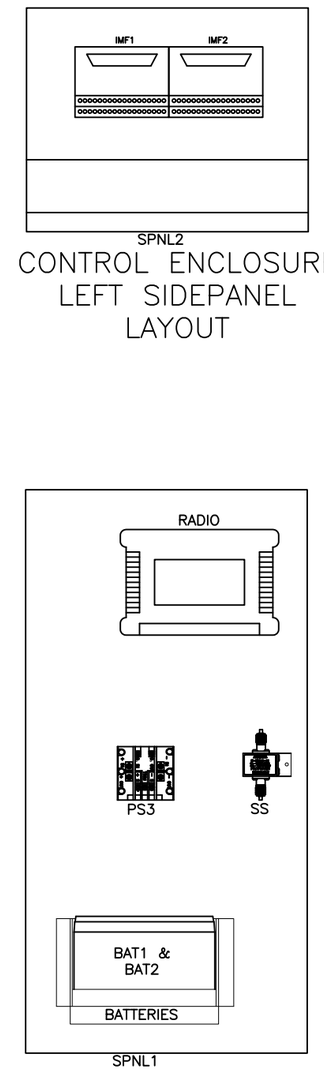

CONTROL ENCLOSURE
RIGHT SIDEPANEL LAYOUT

REVISIONS	BY

IMPROVEMENTS TO WASTEWATER COLLECTION SYSTEM

LIFT STATION CONSTRUCTION DETAILS

ELECTRICAL STANDARDS

EMERALD COAST UTILITIES AUTHORITY

APPROVED BY:

Drawn:
Designed:
Checked:
Date: 12/18/2014
Scale:
Project No:
Sheet No. 9
OF 18 Sheets

ALL WORK SHALL BE CONSTRUCTED IN ACCORDANCE WITH THE LATEST EDITION OF THE E.C.U.A. STANDARD SPECIFICATIONS

240-208V RVSS Equipment List

Item	Tag	Panel	Description	Manufacturer	Model	Qty
1	ENC1	All	60X24X18 NEMA 4X SS Enclosure	Hoffman	A602418SSFSN4	4
2	BPNL1	All	60x24 Painted Steel Backpanel	Hoffman	A60P24F1	4
3	SPNL1	Control	28"H x 12"W Aluminum Sidepanel	EWS	Custom	1
4	DFNT	Power & Control	60x24 Aluminum Deadfront Panel	EWS	Custom	2
5	DSWK	Power & Control	Door Swing Kit	Hoffman	ANADFK	2
6	FRM	Power	Expanded Metal Stainless Steel Frame	EWS	SEE DRAWINGS	1
7	PDB	Power	Incoming Power Distribution Block PDB	Square D	9080LBA363101	1
8	PDB	Power	Incoming Power Distribution Block PDB Cover	Square D	9080LB33	1
9	GND	Power	Power Panel Ground Bar	Square D	PK15GTA-L	1
10	ENC3	Power	16"H x 16"W x 8"D Screw Cover Type 3R Enclosure	Hoffman	A16168GSC	1
11	CB1	Power	600V Main Circuit Breaker	Square D	SEE HP TABLE SHEET 11	1
12	CB2	Power	600V Emergency Circuit Breaker	Square D	JDL36200	1
13	CB1,CB2	Power	Mechanical Interlock for H/J Frame Circuit Breakers	Square D	S29369	1
14	CB1,CB2	Power	Door Mounted Rotary Handle for H/J Frame Circuit Breakers	Square D	S29338	2
15	GEN REC	Power	NEMA 4X Generator Receptacle	Appleton	AR20044RS	1
16	PDB1	Power	Main Power Distribution Block PDB1	Square D	9080LBA365208	1
17	PDB1	Power	Main Power Distribution Block PDB1 Cover	Square D	9080LB53	1
18	F1-F3, F38-F40	Power	3 Pole Rejection type Fuse Block	Bussmann	BC6033PQ	2
19	F1-F3, F38-F40	Power	1A Rejection Type Fuse, Class CC	Bussmann	KTK-R-1	6
20	F1-F3, F38-F40	Power	Fuse Cover	Bussmann	SAMI-7N	6
21	PM	Power	240V Phase Monitor	Timemark	257B	1
22	PM	Power	600V, 8-Pin Relay Base	ABB	OT08PC	1
23	CB3-CB5	Power	Breaker Stand	EWS	Custom	1
24	CB3	Power	30A 600V 3 Pole Circuit Breaker, Main Surge Arrestor	Square D	HDL36030	1
25	SA	Power	Main Surge Arrestor	SSI	SEE HP TABLE SHEET 11	1
26	CB4, CB5	Power	600V 3 Pole Circuit Breaker, Starter	Square D	SEE HP TABLE SHEET 11	2
27	CB4, CB5	Power	H & J Frame Circuit Breaker Locking System	Square D	S29371	2
28	PDB2A, PDB3A	Pump 1 & 2	Power Distribution Block, (1)#14-2/0.....(4)#14-4 (PDB2A, PDB3A)	Square D	9080LBA362104	2
29	PDB2A, PDB3A	Pump 1 & 2	Power Distribution Block Cover, (1)#14-2/0.....(1)#14-2/0	Square D	9080LB23	2
30	F4, F5	Pump 1 & 2	6A Fuse, RVSS Control Power	Bussmann	AGC-6	2
31	RVSS1, RVSS2	Pump 1 & 2	Reduced Voltage Soft Starter	Solcon	SEE HP TABLE SHEET 11	2
32	RVSS1, RVSS2	Control	Remote keypad for Solcon RVS-DN SoftStarter	Solcon	DISP6640043	2
33	IMM1, IMM2	Pump 1 & 2	FLKM-037 SUB/S Interface Cable Male	Phoenix Contact	2281115	2
34	IMF1, IMF2	Control	FLKM-037 SUB/B Interface Cable Female	Phoenix Contact	2281212	2
35	IMM1, IMM2, IMF1, IMF2	Pump 1, 2 & Control	37 Pin D-Sub Cable, DB-37 Male to DB-37 Female	GC Electronics	45-463	2
36	SPNL2	Control	10"H x 12"W Aluminum Sidepanel	EWS	Custom	1
37	GND	Pump 1 & 2	Motor Ground Lug	NSI	2-0T	2
38	PDB2, PDB3	Pump 1 & 2	Motor Power Distribution Block PDB2&3, (1)#14-2/0.....(1)#14-2/0	Square D	9080LBA362101	2
39	PDB2, PDB3	Pump 1 & 2	Motor Power Distribution Block PDB2&3 Cover	Square D	9080LB23	2
40	CB6-CB9	Power	Hinged Aluminum Bracked for Mounting 240/120V Circuit Breakers through Deadfront	EWS	Custom	1
41	PDB4	Power	240V/120V Power Distribution Block PDB4, (1) #14-2 ... (4) #18-10	Square D	9080LBA361104	1
42	CB6	Power	20A, 240V, 2 Pole Circuit Breaker	Square D	QOU220	1
43	REC1	Power	20A, 250V, 6-20R Receptacle	P&S	5872I	1
44	CB7, CB8	Power	20A, 120V 1 Pole Circuit Breaker	Square D	QOU120	2
45	REC2	Power	120V 20A GFCI Duplex Receptacle NEMA5-20R	P&S	2094-I	1
46	REC1, REC2	Power	Custom Receptacle Cover NEMA 4X S.S.	HOFFMAN	HIDRPSS-MOD	1
47	REC1, REC2	Power	3/4 1G AL FD BOX	Appelton	4CS-1/2	2
48	CB9	Power	15A, 120V, 1 Pole Circuit Breaker	Square D	QOU115	1
49	CB10	Power	10A, 120V, 1 Pole Circuit Breaker	Square D	QOU110	1
50	R1	Power	120V 3PDT General Purpose Relay w/ Indicator Lamp	Potter Brumfield	KRPA-14AN-120	1
51	R1-R13, SF1, SF2	All	11 Pin Relay Base	ABB	NDS-11	15
52	F4 - F7	Pump 1, 2 & Power	Fused Terminal Block w/ 120V Blown Fuse Indication	Allen Bradley	1492-H4	4
53	-	Pump 1, 2 & Power	1492-H4 &H5 Fused Terminal Block End Cover	Allen Bradley	1492-N37	4
54	F6, F7	Power	3A Fuse, Power Supply Primary	Bussmann	AGC-3	2
55	PS1, PS2	Power	10A 24VDC Power Supply	Phoenix Contact	2938604	2
56	D1, D2	Power	10A Diode, P1000A	Newark	51R7094	2
57	-	Power	Custom Stand/Lexan Hinged Cover w/Alum Stand for TBPP & Power Supply Fuses	EWS	Custom	1
58	F8-F24	Control	Fused Terminal Block w/ 24VDC Blown Fuse Indication	Allen Bradley	1492-H5	17
59	F8 - F11	Control	10A Fuse, Power Supply Secondary & Batteries	Bussmann	AGC-10	4
60	BAT1, BAT2	Control	12VDC Battery	Power Sonic	PS1290	2
61	PS3	Control	24VDC-15VDC Converter, 2A	Vicor	V1-J12-EY-B1	1
62	RADIO	Control	400MHz Radio	GE MDS	SD04MD	1
63	RADIO	Control	DB9 Male/Male Gender Changer	Office Depot	946660	1
64	RADIO/SS	Control	3 Foot LMR400UF Coaxial Jumper NMale to TNCMale	Tessco	324503	1
65	SS	Control	Coaxial Surge Suppressor, 100-512MHz	Polyphaser	VHF50HN	1
66	-	-	50FT Coaxial Cable, NMale-Nmale, Wireless Solutions 400-07-07-P50 (Ship Loose)	Tessco	370875	1
67	-	-	400MHz Yagi Antenna w/ N Female Connector, MAXRAD MYA4506N (Ship Loose)	Tessci	37634	1
68	-	-	Antenna Tower 5' Base Section, ROHN R-SB25G5 (Ship Loose)	Tessco	64559	1
69	-	-	Antenna Tower 10' Mid Section, ROHN R-25G (Ship Loose)	Tessco	56866	1
70	-	-	Antenna Tower 9' Top Section, ROHN R-25AG2 (Ship Loose)	Tessco	70080	1
71	-	-	21' 1-1/4" S.S. Antenna Mast (Ship Loose)	Bell Steel	23008	1
72	F14, F15	Control	1/4A Fuse, Motor Thermal Inputs	Bussmann	AGC-1/4	2
73	F12, F13, F19, F20	Control	2A Fuse, Radio Power Supply, Radio & Digital Outputs	Bussmann	AGC-2	4
74	SS1, SS2	Control	3 Position Selector Switch, 30MM	Square D	9001SKS43BH2	2

Item	Tag	Panel	Description	Manufacturer	Model	Qty
75	R2-R13	Control	24VDC 3PDT General Purpose Relay w/ Indicator Lamp	Potter Brumfield	KRPA-14DN-24	12
76	SF1, SF2	Control	120V Seal Failure Relay	ATC	SPM-120-AAA-10K	2
77	ISR1	Control	Intrinsically Safe Barrier Relay, 24VDC	Phoenix Contact	2685476	1
78	TB2	Control	Terminal Block, Blue TB2	Phoenix Contact	3044115	4
79	TB2	Control	Terminal Block, Blue End Barrier, TB2	Phoenix Contact	3047235	1
80	TB2	Control	Ground Terminal Blocks, TB2	Phoenix Contact	3044128	2
81	PB1, PB2	Control	Push Button, Black 1NO 1NC	Square D	9001SKR1BH13	2
82	SS3, SS4	Control	2 Position Selector Switch, 30MM	Square D	9001SKS11BH2	2
83	TD1	Control	24VDC 0-180 Second Time Delay Relay	Square D	RE48ATM12MW	1
84	TD1	Control	8 Pin Relay Base	ABB	NDS-8	1
85	F16, F23, F24	Control	1/10A Fuse, Analog Inputs, Analog Outputs & HMI	Bussmann	AGC-1/10	3
86	HMI	Control	~~TD400C Text~~ **Panel View Plus 7, 6", Color; Manufacturer: Allen Bradley; Model # 2711P-T7C21D8S** ~~40-0AA00-0AX1~~			~~1~~
87	F17, F18	Control	1A Fuse, Digital Inputs	Bussmann	AGC-1	2
88	PLC	Control	~~S7-200 Dual~~ **Compact Logix PLC Processor; Manufacturer: Allen Bradley; Model # 1769-L33ER** ~~16-2AD23-0XB0~~			~~1~~
89	AI	Control	~~S7-200 4 Poi~~ **Analog Input Module, Isolated, 4Pt.; Manufacturer: Allen Bradley; Model # 1769-IF4I** ~~31-0HC22-0XA0~~			~~1~~
90	AO	Control	~~S7-200 2 Poi~~ **Analog Output Module, 2Pt.; Manufacturer: Allen Bradley; Model # 1769-OF2** ~~32-0HB22-0XA0~~			~~1~~
91	PLC	Control	~~S7-200 Comr~~ **Serial Communications Cable; Manufacturer: - ; Model # CUSTOM** ~~91-3CB30-0XA0~~			~~1~~
92	SP1-SP3	Control	Plug In DI Surge Suppression, PT 4x1...DC	Phoenix Contact	2838322	3
93	SP1-SP3	Control	Terminal Block Base for Plugable Surge Supression, PT 4x1-BE	Phoenix Contact	2839363	3
94	LS1-LS4	Control	Panel Intrusion Switches, N.C. Contacts	NSI	76030PS	4
95	F21	Control	1-1/2A Fuse, PLC Supply	Bussmann	AGC-1-1/2	1
96	F22	Control	3/4A Fuse, Process Analyzer	Bussmann	AGC-3/4	1
97	PT	Control	Process Transmitter	Endress & Hauser	RMA42AAAH2	1
98	PT	-	Submersible Level Transducer, 33ft Range w/ 60ft Cable & Mounting Clamp (Ship Loose)	Endress & Hauser	FMX21-FE221HGE21A	1
99	F29-F31	Control	24VDC Fused Terminal Block With Indication	Phoenix Contact	3046090	3
100	F29-F31	Control	1/4A Fuse, Analog Inputs	Bussmann	GMA-250	3
101	F4, F5	Pump 1 & 2	6A Fuse, RVSS Control Power	BUssmann	AGC-6	2
102	TBPP,1,DC,P1,1A,P2 & 2A	All	Terminal Block, Gray 26-10 AWG Wire	Phoenix Contact	3044102	120
103	TBPP,1,DC,P1,1A,P2 & 2A	All	Terminal Block End Barrier	Phoenix Contact	3047028	8
104	TBPP,1,DC,P1,1A,P2 & 2A	All	Terminal Block End Anchor	Phoenix Contact	800886	17
105	TBP1A, TBP2A	Pump 1 & 2	Terminal Block, Gray 26-8 AWG Wire, TBVFD1A & TBVFD2A	Phoenix Contact	3044131	8
106	GND	Control	Control Panel Ground Bar	Square D	PK5GTA	3
107	-	Pump 1, 2 & Control	Meter Socket (SHIP LOOSE)	Milbank	UAP3566-X-HSP	1
108	-	-	Stainless Steel 60' Float (SHIP LOOSE)	Anchor Scientific	P60NO-SST	2
109	-	-	Insulated Ground Neutral (SHIP LOOSE)	Square D	SN400LA	1
110	-	-	Ground Bar Kit (SHIP LOOSE)	Square D	PKDGTJ250	1
111	-	-	NEMA 4A S.S. Disconnect (SHIP LOOSE)	Square D	J250DS	1
112	-	-	Antenna Mast Stabilization Plate (Ship Loose)	EWS	Custom	1
113	-	-	Stainless Steel 'U' Bolt, 2" Pole, 5/16" Diameter Bolt w/ 2-1/2" Threads (SHIP LOOSE)			1
114	-	-	5/16" Stainless Steel Flat Washer for 'U' Bolt (SHIP LOOSE)			2
115	-	-	5/16" Stainless Steel Lock Washer for 'U' Bolt (SHIP LOOSE)			2
116	-	-	5/16" Stainless Steel Nut for 'U' Bolt (SHIP LOOSE)			2
117	-	-	Stainless Steel 'U' Bolt, 1/4" Diameter (SHIP LOOSE)			2
118	-	-	1/4" Stainless Steel 1/4" Nut for 'U' Bolt (SHIP LOOSE)			4
119	-	-	1-1/4" Reduction Bushing for Antenna Tower, ROHN R-TB50 (SHIP LOOSE)	Tessco	36882	1
120	PLC	Control	~~S7-200 Memo~~ **Memory Card, Secure Digital, 1GB; Manufacturer: Allen Bradley; Model # 1784-SD1** ~~18GF230AX0~~			~~1~~
121	N	Power	Incoming Neutral Block	Square D	9080LBA163206	1
122	N	Power	Incoming Neutral Block Cover	Square D	9080LB31	1
123	N	Pump 1 & 2	Neutral Block	Square D	9080LBA161104	2
124	SPNL3	Power	32"X12" Aluminum Sidepanel	EWS	Custom	1
125	FM	Control	Flow Meter	Endress & Hauser	50P Compact	1
126	PR	Control	Pressure Transmitter (0 - 150 PSI Transmitter)	Endress & Hauser	PMP71-AAC1P61RAAMA	1
127	PM2	Power	Voltage Monitor, Siemens Sentron PAC3100	Siemens	7KM3133-0BA00-3AA0	1
128	HTR	Pump 1 & 2	550W Space Heater	Stego	02700.9-00	2
129	TBCT	Power	Terminal Block, DIN Rail, Test Disconnect	Phoenix Contact	3047400	6
130	TBCT	Power	Terminal Block, C-ME 6/2	Phoenix Contact	3034442	3
131	TBCT	Power	Switching Jumper, POS 2, Gray/Orange	Phoenix Contact	3034468	3
132	TBCT	Power	Cover, 2.2M	Phoenix Contact	3047426	1
133	CT1-CT3	Power	Current Transformers, 250:5 Ratio	Square D	2NR-251	3
134	GFM	Power	Ground Fault Module	Square D	GFM150HD	2
135	F41	Power	1 Pole Rejection Type Fuse Holder	Bussmann	BC6031PQ	1
136	F41	Power	0.6A Rejection Type Fuse, Class CC	Bussmann	KTK-R-6/10	1
137	ENC4	Power	14 X 12 NEMA 4X SS Enclosure	Hoffman	LC353020SS	1
138	ENC4	Power	2" Galv. Rigid Coupling	-	-	1
139	ENC4	Power	2" x 1-1/2" Reducing Bushing	Crousehinds	-	1
140	ENC4	Power	2" Ring Seal Rubber Gasket	T&B	5267	1
141	ENC4	Power	Cord Grip, 1.28 - 1.53	Appleton	CG-128150	1
142	ENC4	Power	1-1/2" Alum. Hub	Crousehinds	STA-S	1
143	**DI1-3**	**Control**	**Digital Input Module, 16Pt.**	**Allen Bradley**	**1769-IQ16**	**2**
144	**DO1**	**Control**	**Digital Output Relay Module, 16Pt.**	**Allen Bradley**	**1769-OW16**	**1**
145	**PLC-PS**	**Control**	**24VDC Power Supply for PLC**	**Allen Bradley**	**1769-PB4**	**1**
146	**COM**	**Control**	**Modbus Serial Communications Module**	**Allen Bradley**	**MVI69L-MBS**	**1**
147	**PLC**	**Control**	**Right End Cap**	**Allen Bradley**	**1769-ECR**	**1**

AS OF APRIL 15, 2015, DUE TO SIEMENS' DISCONTINUANCE OF PLC EQUIPMENT, ECUA WILL NOW UTILIZE ALLEN-BRADLEY EQUIPMENT PER THE INFORMATION SHOWN IN BOLD TEXT AND OUTLINED IN RED.

REVISIONS BY

IMPROVEMENTS TO WASTEWATER COLLECTION SYSTEM

LIFT STATION CONSTRUCTION DETAILS

GENERAL NOTES AND DETAILS

ECUA EMERALD COAST UTILITIES AUTHORITY

APPROVED BY:

Drawn:
Designed:
Checked:
Date: PROTOTYPE
Scale:
Project No:
Sheet No. 10
Of 17 Sheets

ALL WORK SHALL BE CONSTRUCTED IN ACCORDANCE WITH THE LATEST EDITION OF THE E.C.U.A. STANDARD SPECIFICATIONS

Horsepower Related Compontents Equipment List					
Item	Tag	240V Supply		208V Supply	
		Horsepower		Horsepower	
		10	15	10	15
Main Circuit Breaker	CB1	JDL36200	JDL36225	JDL36225	JDL36250
Starter Circuit Breaker	CB4, CB5	HDL36090SA	HDL36100SA	HDL36100SA	HDL36110SA
Reduced Voltage Soft Starter	M1, M2	RVS-DN-58-400-115-3+M+8+9+D+U-S	RVS-DN-72-400-115-3+M+8+9+D+U-S	RVS-DN-72-400-115-3+M+8+9+D+U-S	RVS-DN-85-400-115-3+M+8+9+D+U-S
Surge Arrestor	SA	SDLA3D1	SDLA3D1	SDLA3Y1	SDLA3Y1
Ground Fault Module	CB4, CB5	GFM150HD	GFM150HD	GFM150HD	GFM150HD

Horsepower Related Power Conductors, CGB's and Hubs					
Conductor Tag		Horsepower (240V)		Horsepower (208V)	
		20	25	20	25
P-01, P-03 & P-04	Description	(3)#3/0	(3)#4/0	(3)#4/0	(3)#250
	Manufacturer	N/A	N/A	N/A	N/A
	Catalog #	N/A	N/A	N/A	N/A
	Length (Ft. Max)	N/A	N/A	N/A	N/A
	Cable Dia (in)	0.584"	0.642"	0.642"	0.711"
	Appleton Connector	(3) -CG-5075	(3) -CG-6275	(3) -CG-6275	(3) -CG-75100
	Connector Range	0.500"-0.625"	0.625"-0.750"	0.625"-0.750"	0.750"-0.875"
	Meyers Hub	(3) 3/4" - STA-2	(3) 3/4" - STA-2	(3) 3/4" - STA-2	(3) 1" - STA-3
P-02A	Description	(1)#6	(1)#4	(1)#4	(1)#4
	Manufacturer	N/A	N/A	N/A	N/A
	Catalog #	N/A	N/A	N/A	N/A
	Length (Ft. Max)	N/A	N/A	N/A	N/A
	Cable Dia (in)	0.254"	0.324"	0.324"	0.324"
	Appleton Connector	(1)-GC-1850	(1)-GC-3150	(1)-GC-3150	(1)-GC-3150
	Connector Range	0.187"-0.312"	0.312"-0.437"	0.312"-0.437"	0.312"-0.437"
	Hub	(1) 1/2" - STA-1	(1) 1/2" - STA-1	(1) 1/2" - STA-1	(1) 1/2" - STA-1
P-02B	Description	(1)#6	(1)#4	(1)#4	(1)#4
	Manufacturer	Southwire	Southwire	Southwire	Southwire
P-05 & P-06	Description	(3)#3/0	(3)#3/0	(3)#3/0	(3)#3/0
	Manufacturer	N/A	N/A	N/A	N/A
	Catalog #	N/A	N/A	N/A	N/A
	Length (Ft. Max)	N/A	N/A	N/A	N/A
	Cable Dia (in)	0.584"	0.584"	0.584"	0.584"
	Appleton Connector	(3) -CG-5075	(3) -CG-5075	(3) -CG-5075	(3) -CG-5075
	Connector Range	0.500"-0.625"	0.500"-0.625"	0.500"-0.625"	0.500"-0.625"
	Hub	(3) 3/4" - STA-2	(3) 3/4" - STA-2	(3) 3/4" - STA-2	(3) 3/4" - STA-2
P-07 & P-09	Description	(3)#4 W/G, TC	(3)#4 W/G, TC	(3)#4 W/G, TC	(3)#2 W/G, TC
	Manufacturer	Houston Wire	Houston Wire	Houston Wire	Houston Wire
	Catalog #	HW 154 00404	HW 154 00404	HW 154 00404	HW 154 00204
	Length (Ft. Max)	19 FT	19 FT	19 FT	19 FT
	Cable Dia (in)	0.97"	0.97"	0.97"	1.13"
	Appleton Connector	(2) - CG-87100	(2) - CG-87100	(2) - CG-87100	(2) - CG-112125
	Connector Range	0.875"-1.000"	0.875"-1.000"	0.875"-1.000"	1.125"-1.250"
	Hub	(2) 1" - STA-3	(2) 1" - STA-3	(2) 1" - STA-3	(2) 1-1/4" - STA-4
P-08 & P-10	Description	(3)#4	(3)#4	(3)#4	(3)#2
	Manufacturer	Southwire	Southwire	Southwire	Southwire

REVISIONS	BY

IMPROVEMENTS TO WASTEWATER COLLECTION SYSTEM

LIFT STATION CONSTRUCTION DETAILS

ELECTRICAL STANDARDS

EMERALD COAST UTILITIES AUTHORITY

APPROVED BY:

Drawn:
Designed:
Checked:
Date: 12/18/2014
Scale:
Project No:
Sheet No. 11
Of 18 Sheets

ALL WORK SHALL BE CONSTRUCTED IN ACCORDANCE WITH THE LATEST EDITION OF THE E.C.U.A. STANDARD SPECIFICATIONS

Power & Control Conductors, CGB's and Hubs

Cable Number	Description	Manufacturer	Catalog Numer	Length (Ft. Max)	Cable Diameter	Appleton Liquidtight Cable Connector	Connector Cable Range	Crouse-Hinds Myers Hub	From Panel/Enclosure	To Panel/Enclosure
P-14	(1) #8 AWG	N/A	N/A	AS REQ'D	N/A	N/A	N/A	N/A	Field	Power Panel
P-15	3-1/C #12 AWG	N/A	N/A	AS REQ'D	N/A	N/A	N/A	N/A	Power Panel	Power Panel
P-16	3-1/C #12 AWG	N/A	N/A	AS REQ'D	N/A	N/A	N/A	N/A	Power Panel	Power Panel
C-01	(16) #14 AWG, Tray Cable	Houston Wire & Cable	HW 151 01416	24 FT	0.68"	(2) - CG-6275	0.625"-0.750"	(2) 3/4" - STA-2	Power Panel	Control Panel
C-02	(16) #14 AWG, Tray Cable	Houston Wire & Cable	HW 151 01416	22 FT	0.68"	(2) - CG-6275	0.625"-0.750"	(2) 3/4" - STA-2	Pump 1 Panel	Control Panel
C-03	(16) #14 AWG, Tray Cable	Houston Wire & Cable	HW 151 01416	19 FT	0.68"	(2) - CG-6275	0.625"-0.750"	(2) 3/4" - STA-2	Pump 2 Panel	Control Panel
C-04	1 Pair #16 SH, Tray Cable	Houston Wire & Cable	HW 120 01601	22 FT	0.33"	(2) - CG-2575	0.250"-0.375"	(2) 3/4" - STA-2	Pump 1 Panel	Control Panel
C-05	1 Pair #16 SH, Tray Cable	Houston Wire & Cable	HW 120 01601	22 FT	0.33"	(2) - CG-2575	0.250"-0.375"	(2) 3/4" - STA-2	Pump 2 Panel	Control Panel
PUMP 1-PWR	Per Mfg Specs	N/A	N/A	N/A	N/A	CG Series based on Mfg Specs	N/A	STA Series based on Mfg Specs	Field	Pump 1 Panel
PUMP 1-MTP	Per Mfg Specs	N/A	N/A	N/A	N/A	CG Series based on Mfg Specs	N/A	STA Series based on Mfg Specs	Field	Pump 1 Panel
PUMP 1-SF	Per Mfg Specs	N/A	N/A	N/A	N/A	CG Series based on Mfg Specs	N/A	STA Series based on Mfg Specs	Field	Pump 1 Panel
PUMP 2-PWR	Per Mfg Specs	N/A	N/A	N/A	N/A	CG Series based on Mfg Specs	N/A	STA Series based on Mfg Specs	Field	Pump 2 Panel
PUMP 2-MTP	Per Mfg Specs	N/A	N/A	N/A	N/A	CG Series based on Mfg Specs	N/A	STA Series based on Mfg Specs	Field	Pump 2 Panel
PUMP 2-SF	Per Mfg Specs	N/A	N/A	N/A	N/A	CG Series based on Mfg Specs	N/A	STA Series based on Mfg Specs	Field	Pump 2 Panel
Float Switch 1	Float Switch Cable	BY OTHERS	N/A	N/A	0.56"	(1) - CG-5050	0.500"-0.625"	(1) 1/2" - STA-1	Field	Control Panel
Float Switch 2	Float Switch Cable	BY OTHERS	N/A	N/A	0.56"	(1) - CG-5050	0.500"-0.625"	(1) 1/2" - STA-1	Field	Control Panel
Pressure Xducer	Pressure Transducer Cable	BY OTHERS	N/A	N/A	0.35"	(1) - G-3150	0.312"-0.437"	(1) 1/2" - STA-1	Field	Control Panel
Antenna COAX	Coaxial Cable	BY OTHERS	N/A	N/A	0.408"	(1) - CG-3750	0.375"-0.500"	(1) 1/2" - STA-1	Field	Control Panel
Comm-1	(37) #18 AWG, Tray Cable	Houston Wire & Cable	HW15001837	20 FT	0.74"	(1) - CG-6275	0.625"-0.750"	(1) 3/4" - STA-2	Control Panel	Pump 1 Panel
Comm-2	(37) #18	Houston Wire & Cable	HW15001837	20 FT	0.74"	(1) - CG-6275	0.625"-0.750"	(1) 3/4" - STA-2	Control Panel	Pump 2 Panel

SERVICING CT & TESTING AMMETERS INSTRUCTIONS

WARNING

NEVER LEAVE THE CT CIRCUIT OPEN ALWAYS SHORT THE CIRCUIT. WHEN MAINTENANCE IS REQUIRED ENSURE TO FOLLOW THE INSTRUCTIONS BELOW. FAILURE TO DO SO MAY RESULT IN HIGH VOLTAGE SURGE THAT COULD INJURE PERSONAL AND DAMAGE EQUIPMENT.

THE CALIBRATION & DISCONNECT PROCESS

1. Loosen the screws on the SB–ME 2–8 and move the shorting bar from position A to B to short the outputs of the CT.
2. Secure the shorting bar by tightening the screws. The CT is now neutralized and the circuit is "safe" to open.
   2.1. For circuits that include an ME knife–disconnect terminal block, the knife disconnects can now be safely opened.
3. The test signal can now be injected into the transducer/meter side of the circuit by inserting the signal probes into the test adapters or connecting the signal to the disconnected wiring of the measurement circuit.

To return the unit to normal operation, perform the above steps in reverse order:

1. Disconnect the test signal/probes from the transducer wires or remove probes from the test plugs.
   1.1. For circuits that include the ME, the knife disconnect must now be CLOSED.
2. Open the switching bridge and return to normal operation.
3. Loosen the screws and move the shorting bar from position B to A and snap into place.
4. Tighten the screws to prevent movement and inadvertent shorting of the CT.

The CT measurement circuit is now functional

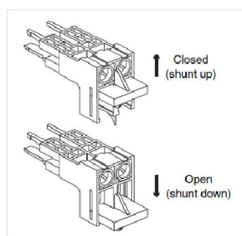

FIGURE 1: SB–ME 2–8 switching bridge

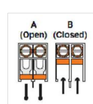

FIGURE 2: SB–ME 2–8 switching bridge

REVISIONS	BY

IMPROVEMENTS TO WASTEWATER COLLECTION SYSTEM

LIFT STATION CONSTRUCTION DETAILS

GENERAL NOTES AND DETAILS

ECUA
EMERALD COAST UTILITIES AUTHORITY

APPROVED BY:

Drawn:
Designed:
Checked:
Date: PROTOTYPE
Scale:
Project No:
Sheet No. 12
Of 17 Sheets

NOTES:

ALL WORK SHALL BE CONSTRUCTED IN ACCORDANCE WITH THE LATEST EDITION OF THE E.C.U.A. STANDARD SPECIFICATIONS

1) ALL SPARE WIRE WILL BE CLEARLY LABELED WITH THE CABLE NUMBER & A SPARE DESIGNATION ON INDIVIDUAL WIRES. THESE SPARES WILL BE LONG ENOUGH TO REACH ANY POINT IN THE PANEL.
2) SPARE CONDUCTORS SHOULD BE TRIMMED AND HEAT SHRINK SHOULD BE USED TO SECURE THE SPARE CONDUCTORS IN THE CABLE.
3) THE INNER CONNECTING CONDUCTORS BETWEEN THE PANELS ARE CODED AS FOLLOWS: THE FIRST GROUP OF CHARACTER IS THE WIRE NUMBER AND THE SECOND GROUP IS THE COLOR (I.E. 1(BK) SIGNIFIES THAT THE WIRE NUMBER IS 1 AND THE COLOR IS BLACK). WIRE COLOR CODE AS FOLLOWS: BK–BLACK, RD–RED, BU–BLUE, OR–ORANGE, YL–YELLOW, BN–BROWN. FOR COLORS THAT ARE DENOTED AS XX/YY, XX IS THE BASE COLOR AND YY IS THE SPIRAL STRIPE (I.E. RD/BK IS A RED WIRE WITH A BLACK SPIRAL STRIPE).
4) SEE SHEETS 11 & 12 FOR PANEL TO PANEL INNER CONNECTING CONDUCTOR AND CABLE DETAILS.

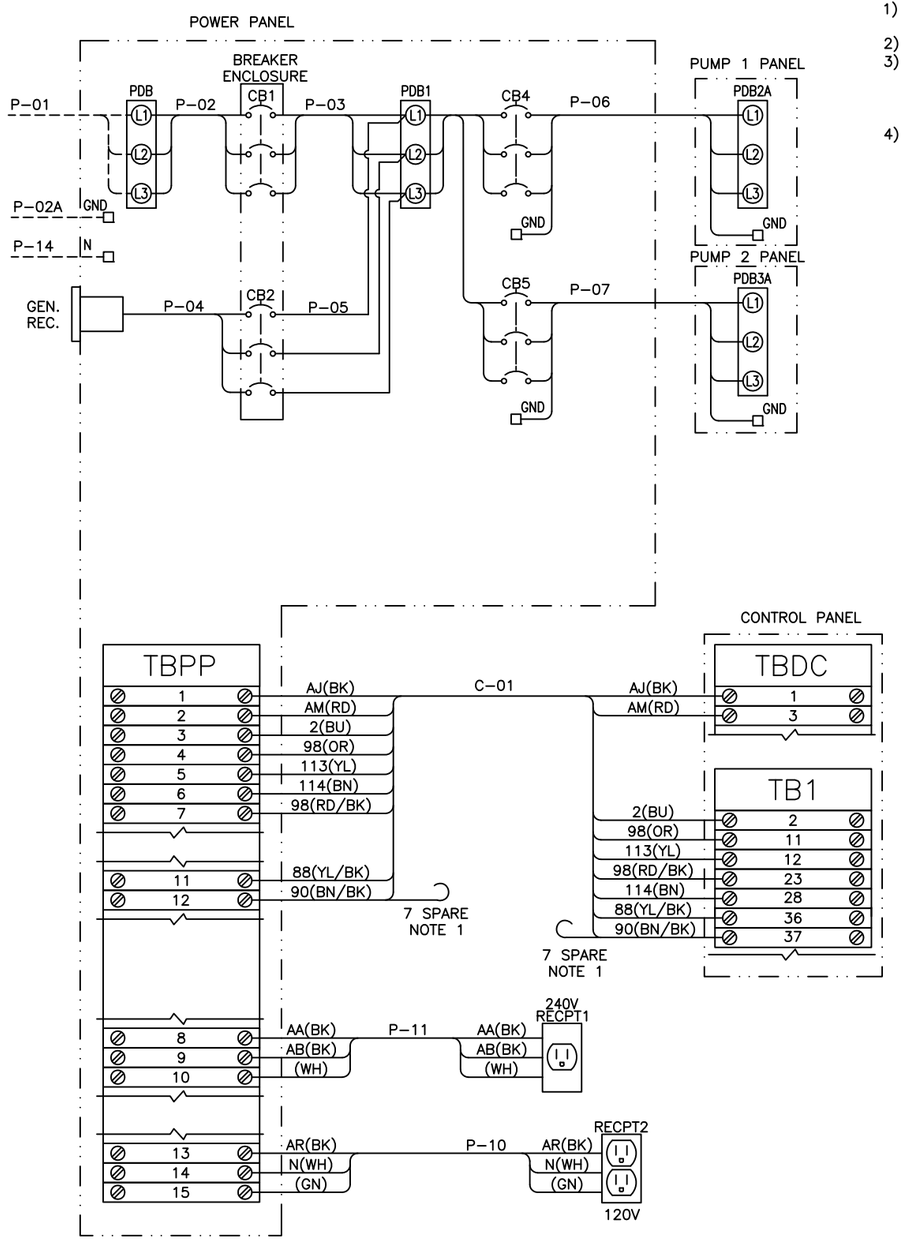

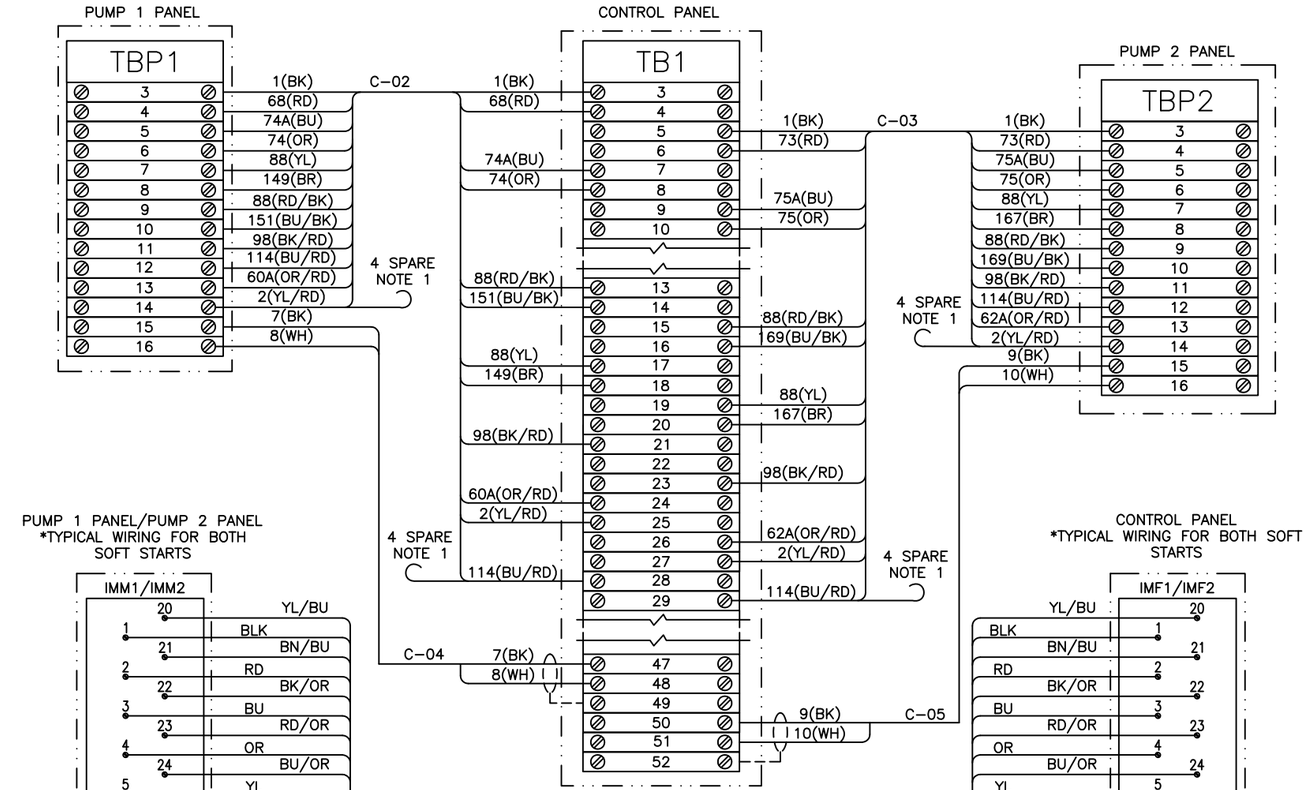

REVISIONS	BY

IMPROVEMENTS TO WASTEWATER COLLECTION SYSTEM

LIFT STATION CONSTRUCTION DETAILS

ELECTRICAL STANDARDS

EMERALD COAST UTILITIES AUTHORITY

APPROVED BY:

Drawn:
Designed:
Checked:
Date: 12/18/2014
Scale:
Project No:
Sheet No. 13
OF 18 Sheets

ALL WORK SHALL BE CONSTRUCTED IN ACCORDANCE WITH THE LATEST EDITION OF THE E.C.U.A. STANDARD SPECIFICATIONS

NOTES:

1. TOP AND BOTTOM OF BASE TO BE LEFT OPEN.
2. DRILL TOP OF BASE TO ATTACH ENCLOSURES AS REQUIRED.
3. DRILL BOTTOM OF BASE TO ATTACH TO SLAB AS REQUIRED.

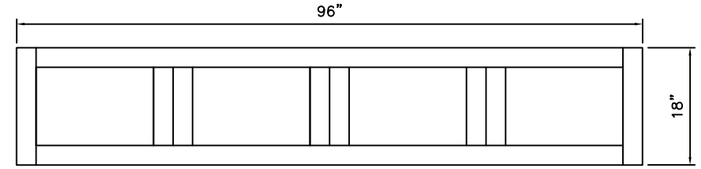

TOP VIEW

ATTENTION

THIS LAYOUT IS ONE OF TWO (2) POSSIBLE CHOICES – SEE SHEET 14A FOR THE OTHER OPTION. IF THIS LAYOUT OPTION IS SELECTED, SEE SHEET 7 FOR ASSOCIATED PANEL LAYOUT DETAILS.

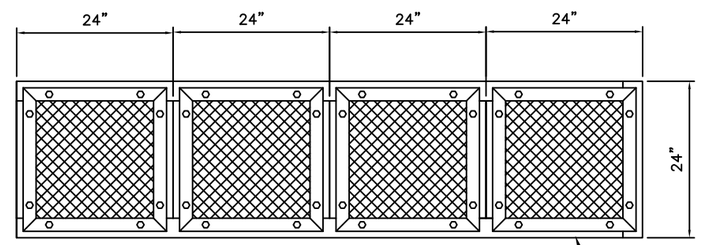

FRONT VIEW

FRONT OF BASE WILL HAVE REMOVABLE PANELS AT EACH OPENING AS SHOWN. ATTACH SCREENS TO BACK SIDE OF REMOVABLE PANELS

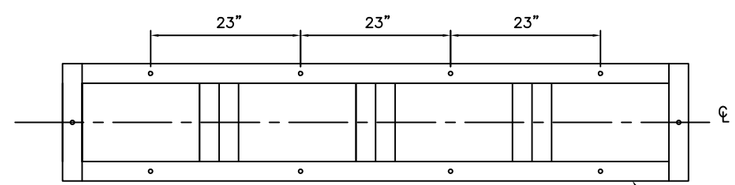

BOTTOM VIEW

DRILL (10) 5/8"ø HOLES AS SHOWN, CENTERED ON ANGLE

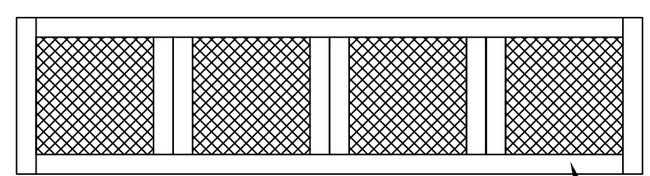

BACK VIEW

ENTIRE BASE MADE FROM 2" STAINLESS STEEL ANGLE, WELDED

REVISIONS	BY

IMPROVEMENTS TO WASTEWATER COLLECTION SYSTEM

LIFT STATION CONSTRUCTION DETAILS

ELECTRICAL STANDARDS

ECUA EMERALD COAST UTILITIES AUTHORITY

APPROVED BY:

Drawn:	
Designed:	
Checked:	
Date:	12/18/2014
Scale:	
Project No:	
Sheet No.	14
Of	18 Sheets

ALL WORK SHALL BE CONSTRUCTED IN ACCORDANCE WITH THE LATEST EDITION OF THE E.C.U.A. STANDARD SPECIFICATIONS

Power Panel Fuse Schedule				
Fuse	Type	Voltage	Amps	Description
F1	KTK-R-1	600	1A	PM1 Phase Monitor A Phase
F2	KTK-R-1	600	1A	PM1 Phase Monitor B Phase
F3	KTK-R-1	600	1A	PM1 Phase Monitor C Phase
F6	AGC-3	250	3A	Power Supply 1 Primary
F7	AGC-3	250	3A	Power Supply 2 Primary
F38	KTK-R-1	600	1A	PM2 Power Monitor A Phase
F39	KTK-R-1	600	1A	PM2 Power Monitor B Phase
F40	KTK-R-1	600	1A	PM2 Power Monitor C Phase
F41	KTK-R-6/10	600	.6A	Power Monitor

Pump 1 Panel Fuse Schedule				
Fuse	Type	Voltage	Amps	Description
F4	AGC-6	250	6A	Pump 1 Control Power

Pump 2 Panel Fuse Schedule				
Fuse	Type	Voltage	Amps	Description
F5	AGC-6	250	6A	Pump 1 Control Power

Control Panel Fuse Schedule				
Fuse	Type	Voltage	Amps	Description
F8	AGC-10	250	10A	Power Supply 1 Secondary
F9	AGC-10	250	10A	Power Supply 2 Secondary
F10	AGC-10	250	10A	Control Power
F11	AGC-10	250	10A	Batteries
F12	AGC-2	250	2A	Radio Power Supply Primary
F13	AGC-2	250	2A	Radio Power Supply Secondary
F14	AGC-1/4	250	1/4A	Pump 1 Moter Thermal
F15	AGC-1/4	250	1/4A	Pump 2 Moter Thermal
F16	AGC-1/10	250	1/10A	Operator Interface
F17	AGC-1	250	1A	Digital Inputs 0.0-1.4
F18	AGC-1	250	1A	Digital Inputs 1.5-2.7
F19	AGC-2	250	2A	Digital Outputs 0.0-0.7
F20	AGC-2	250	2A	Digital Outputs 1.0-1.7
F21	AGC-1-1/2	250	1-1/2A	PLC Power
F22	AGC-3/4	250	3/4A	Process Transmitter Supply
F23	AGC-1/10	250	1/10A	Analog Inputs
F24	AGC-1/10	250	1/10A	Analog Outputs
F25	GMA-1/4	250	1/4A	Analog Input 2
F26	GMA-1/4	250	1/4A	Analog Input 3
F27	GMA-1/4	250	1/4A	Analog Input 4

HMI BUTTON LEGEND	
F1	FAULT RESET/ENABLE INTRUSION
SHIFT+F1	DISABLE INTRUSION
F2	ALTERNATE PUMP ASSIGNMENTS
F3	RESET PUMP 1 RUNTIME
SHIFT+F3	RESET PUMP 2 RUNTIME
F4	ALARMS SCREEN
F5	OVERVIEW SCREEN
F6	PUMP 1 SCREEN
F7	PUMP 2 SCREEN
F8	SETPOINTS SCREEN

CONTROL PANEL ISR INFORMATION TAGS

THIS AREA IN BLUE IS FOR INTRINSICALLY SAFE CIRCUITS AND DEVICES ONLY. THIS AREA INCLUDES THE AIR SPACE DIRECTLY IN FRONT OF THE BLUE AREA BETWEEN THE BACKPANEL AND THE ENCLOSURE WALLS AND DOOR INCLUDING THE BOTTOM OF THE ENCLOSURE. ONLY INTRINSICALLY SAFE DEVICES AND WIRING ARE ALLOWED IN THIS AREA. DO NOT ROUTE NON–INTRINSICALLY SAFE WIRING THROUGH THIS AREA OF ENCLOSURE.

WARNING

SUBSTITUTION OF COMPONENTS MAY IMPAIR INTRINSIC SAFETY

CONTROL PANEL EXTERIOR TAG INFORMATION

WARNING

TO PREVENT IGNITION OF FLAMMABLE OR COMBUSTIBLE ATMOSPHERES DISCONNECT POWER BEFORE SERVICING

PROVIDES INTRINSICALLY SAFE CIRCUIT EXTENSIONS FOR USE IN CLASS 1, GROUPS A, B, C, AND D WHEN CONNECTED PER REFERENCE DRAWINGS ON MAIN NAMEPLATE LABEL

CONTROL PANEL DEADFRONT TAG INFORMATION

SECURELY FASTEN ALL INNER DOOR LATCHES BEFORE CLOSING OUTER DOOR. FAILURE TO FOLLOW THESE INSTRUCTIONS COULD CAUSE THE OUTER DOOR TO JAM WHEN RE–OPENED

Nameplate Data				
	240V		208V	
Total Load (FLA)	138	166	166	192
Motor Hp	20	25	20	25
Motor FLA	54	68	62	78

Torque Rating Table		
Component	Horsepower	
	20	25
Incoming Distribution Block (PDB)	275lb-in/31.0N-m	275lb-in/31.0N-m
Incoming Neutral Block	40lb-in/4.5N-m	40lb-in/4.5N-m
Main Ground Block	35lb-in/3.9N-m	35lb-in/3.9N-m
Motor Distribution Block (PDB2 & 3)	120lb-in/13.5N-m	120lb-in/13.5N-m
Motor Ground Block	45lb-in/5.1N-m	45lb-in/5.1N-m

REVISIONS	BY

IMPROVEMENTS TO WASTEWATER COLLECTION SYSTEM

LIFT STATION CONSTRUCTION DETAILS

ELECTRICAL STANDARDS

EMERALD COAST UTILITIES AUTHORITY

APPROVED BY:

Drawn:
Designed:
Checked:
Date: 12/18/2014
Scale:
Project No:
Sheet No. 15
Of 18 Sheets

ALL WORK SHALL BE CONSTRUCTED IN ACCORDANCE WITH THE LATEST EDITION OF THE E.C.U.A. STANDARD SPECIFICATIONS

PHOENIX CONTACT GmbH & Co. KG
Flachsmarktstraße 8, 32825 Blomberg, Germany
Fax +49-(0)5235-341200, Phone +49-(0)5235-300
www.phoenixcontact.com

MNR 9040234 / 2010-11-03

CONTROL / INSTALLATION DRAWING
MACX MCR-EX Series

Doc.-No.: 83104549-04

Art.Nr.	Model Number
2865476	MACX MCR-EX-SL-2NAM-RO
~~2924087~~	~~MACX MCR-EX-SL-2NAM-RO-SP~~

WARNING – EXPLOSION HAZARD – Substitution of components may impair suitable for Class I, Division 2.

WARNING – EXPLOSION HAZARD – Do not disconnected equipment unless power has been removed or the area is known to be non-hazardous.

WARNING – Exposure to some chemicals may degrade the sealing properties of materials used in the sealed relays.

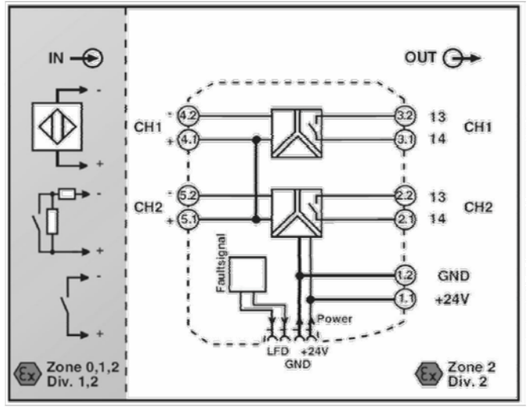

HAZARDOUS AREA
Class I, Division 1, Groups A,B,C,D
Class II, Division 1, Groups E,F,G
Class III, Division 1
Class I, Zone 0,1,2, Groups IIC,IIB,IIA

NON HAZARDOUS AREA
or Class I, Division 2, Groups A,B,C,D
or Class I, Zone 2, Groups IIC,IIB,IIA

I. The Entity Concept allows interconnection of intrinsically safe apparatus with associated apparatus not specifically examined in combination as a system. Selected Intrinsically Safe Equipment must be third party listed as intrinsically safe for the application and have intrinsically safe entity parameters conforming with table 1 below:

Tabelle1:

I.S. Equipment		Associated Apparatus
V max (or Ui)	≥	Voc or Vt (or Uo)
I max (or Ii)	≥	Isc or It (or Io)
P max (or Pi)	≥	Po
Ci + Ccable	≤	Ca (or Co)
Li + Lcable	≤	La (or Lo)

II. Capacitance and inductance of the field wiring from the intrinsically safe equipment to the associated apparatus shall be calculated and must be included in the system calculations as shown under **I**. Where the cable capacitance and inductance per foot are not known, the following values shall be used: Ccable = 60 pF / ft., Lcable = 0.2 µH / ft.

III. The output current of this associated apparatus is limited by a resistor such that the output voltage-current plot is a straight line drawn between open-circuit voltage and short-circuit current.

IV. This associated apparatus has not been evaluated for use in combination with another associated apparatus.

V. This associated apparatus may also be connected to simple apparatus as defined in Article 504.2 and installed and temperature classified in accordance with Article 504.10(B) of the National Electrical Code (ANSI/NFPA70), or other local codes applicable.

VI. Associated apparatus must be installed in an enclosure (which meets the requirements of ANSI/ISA S82) suitable for the application in accordance with the National Electrical Code (ANSI/NFPA 70) for installation in the United States, the Canadian Electrical Code for installation in Canada, or other local codes, as applicable.

VII. When using as non-incendive device for Class I, Division 2 or Class I, Zone 2 do not snap equipment onto or off the T-connector, or connect and disconnect non-intrinsically safe-lines unless power has been removed or the area is known to be non hazardous.

VIII. Intrinsically safe circuits must be wired separately in according with Article 504.20 of the National Electrical Code (ANSI/NFPA 70) for installation in the United States, the Canadian Electrical Code Part 1, Appendix F for installation in Canada, or other local codes, as applicable.

IX. When multiple circuits extend from the same piece of associated apparatus, they must be installed in separate cables or in one cable having suitable insulation. Refer to Article 504.30(B) of the National Electrical Code (ANSI/NFPA 70) and Instrument Society of America Recommended Practice ISA RP12.6 for installing intrinsically safe equipment.

X. When using as non-incendive device for Class I, Division 2 or Class I, Zone 2 with exposure to some chemicals a periodically inspect of the relays for any degradation of properties and a replacement if degradation is found is recommended.

		output circuit - hazardous zone						Group A, B or IIC		Group C or IIB		Group D or IIA		input circuit - hazardous zone				
Art.Nr.	Model Number	Terminal	Voc or Uo / Vdc	Isc or Io / mA	Po / mW	Ci / nF	Li / mH	Ca or Co / nF	La or Lo / mH	Ca or Co / nF	La or Lo / mH	Ca or Co / nF	La or Lo / mH	Terminal	Vmax or Ui / V	Imax or Ii / mA	Ci / nF	Li / mH
2865476	MACX MCR-EX-SL-2NAM-RO	4.1-4.2 5.1.5.2	9,6	10	25	1,1	negligible	510 840 1200 3600	100 5 1 0,01	2700 4400 6300 26000	100 5 1 0,01	-	-	-	-	-	-	-
~~2924087~~	~~MACX MCR-EX-SL-2NAM-RO-SP~~	4.1-4.2 5.1.5.2	9,6	10	25	1,1	negligible	510 840 1200 3600	100 5 1 0,01	2700 4400 6300 26000	100 5 1 0,01	-	-	-	-	-	-	-

		power supply circuit				Max. Surrounding Air Temperature Rating: 60°C	signal circuit - safe zone			interface circuit
Art.Nr.	Model Number	Terminal	T-Connector	Un = 24 V - 20% +25% U range	Um	Ambient Temperature Range: Tamb	Terminal	output	input	socket
2865476	MACX MCR-EX-SL-2NAM-RO	1.1-1.2	yes	19,2 ... 30 V DC	253 V AC / 125 V DC	-20...+60°C	3.1-3.2 + 2.1-2.2	X	-	-
~~2924087~~	~~MACX MCR-EX-SL-2NAM-RO-SP~~	~~1.1-1.2~~	~~yes~~	~~19,2 ... 30 V DC~~	~~253 V AC / 125 V DC~~	~~-20...+60°C~~	~~3.1-3.2 + 2.1-2.2~~	~~X~~	~~-~~	~~-~~

© PHOENIX CONTACT 2010

REVISIONS	BY

IMPROVEMENTS TO WASTEWATER COLLECTION SYSTEM
LIFT STATION CONSTRUCTION DETAILS
ELECTRICAL STANDARDS

EMERALD COAST UTILITIES AUTHORITY

APPROVED BY:

Drawn:
Designed:
Checked:
Date: 12/18/2014
Scale:
Project No:
Sheet No. 16
Of 18 Sheets

GENERAL ELECTRICAL NOTES

NEW WORK:

1. ENTIRE ELECTRICAL INSTALLATION SHALL BE IN ACCORDANCE WITH THE LATEST EDITION (UNLESS NOTED OTHERWISE) OF THE FOLLOWING CODES AND STANDARDS:
   1.1. NATIONAL ELECTRICAL CODE (NFPA 70).
   1.2. STANDARD FOR FIRE PROTECTION IN WASTEWATER TREATMENT AND COLLECTION FACILITIES (NFPA 820).
2. THE CONTRACTOR SHALL BE RESPONSIBLE FOR READING ALL PROJECT SPECIFICATIONS AND WILL BE RESPONSIBLE FOR MEETING ALL REQUIREMENTS OUTLINED IN THE SPECIFICATIONS.
3. CONTRACTOR SHALL COORDINATE ALL WORK WITH OTHER TRADES PRIOR TO ROUGH-IN AND INSTALLATION.
4. WORKING SPACE FOR ALL ELECTRICAL AND CONTROL EQUIPMENT OPERATING AT 600V VOLTS OR LESS TO GROUND AND LIKELY TO REQUIRE EXAMINATION, ADJUSTMENT, SERVICING, OR MAINTENANCE WHILE ENERGIZED SHALL COMPLY WITH NEC, ARTICLE 110.26.
5. THE ELECTRICAL DESIGN PROVIDES A NUMBER OF BRANCH CIRCUITS, AMPACITY AND OVERCURRENT PROTECTION FOR OTHER DIVISIONS DESIGN BASIS EQUIPMENT CONFORMING TO MANUFACTURER'S SPECIFICATIONS AVAILABLE AT TIME OF DESIGN. THE CONTRACTOR SHALL VERIFY ALL EQUIPMENT LOADS PRIOR TO ROUGH-IN. IF REQUIREMENTS OF EQUIPMENT ACTUALLY PROVIDED UNDER CONTRACT FOR CONSTRUCTION ARE DIFFERENT, CONTRACTOR SHALL MAKE ALL CHANGES NECESSARY WITHOUT INCREASE IN THE CONTRACT AMOUNT. SUCH CHANGES SHALL BE BASED UPON REQUIREMENTS, NAMEPLATE VALUES AND CODE REQUIREMENTS, WHICHEVER IS MORE STRINGENT, AND MAY INCLUDE, BUT ARE NOT LIMITED TO: SIZE OF CONDUCTORS, SIZE OF CONDUIT, QUANTITY OF CONDUCTORS AND CONDUITS, TYPE AND SIZE OF CIRCUIT BREAKER OR DISCONNECT, OVERLOADS, FULL-VOLTAGE STARTERS, REDUCED VOLTAGE SOFT STARTERS, VARIABLE FREQUENCY DRIVES, AND FUSE PROTECTION.
6. THE ELECTRICAL CONTRACTOR IS REQUIRED TO COORDINATE, PROVIDE, AND INSTALL A FULLY OPERATIONAL AND CODE COMPLIANT ELECTRICAL SYSTEM. THIS MAY INCLUDE THE ADDITION OF ELECTRICAL ITEMS NOT SHOWN ON THE ELECTRICAL PLANS, BUT REQUIRED FOR SYSTEM OPERATION.
7. CONTRACTOR SHALL COORDINATE INSTALLATION OF ELECTRICAL SERVICE WITH ELECTRICAL UTILITY COMPANY PROVIDING ELECTRICAL SERVICE TO FACILITY. CONTRACTOR SHALL PAY ALL FEES ASSESSED BY ELECTRICAL UTILITY COMPANY TO PROVIDE ELECTRICAL SERVICE TO FACILITY.
8. CONTRACTOR SHALL EXCAVATE AND CONDUCT DEMOLITION SO AS TO AVOID DAMAGE TO EXISTING UTILITIES AND OTHER UNDERGROUND OR CONCEALED ITEMS. IF EXISTING OR NEW ITEMS ARE DAMAGED, THE CONTRACTOR SHALL NOTIFY THE OWNER AT ONCE OF ALL DAMAGE AND SHALL REPAIR (OR REPLACE IF NECESSARY) TO THE ORIGINAL CONDITION TO THE SATISFACTION OF OWNER AND ENGINEER AT NO CHARGE IN THE CONTRACT AMOUNT.
9. THE CONTRACTOR SHALL BE RESPONSIBLE FOR PROVIDING DETAILED ELECTRICAL AND CONTROL EQUIPMENT LAYOUT DRAWINGS TO THE ENGINEER AND OWNER FOR APPROVAL PRIOR TO INSTALLATION.
10. ALL CONDUITS NOT LOCATED UNDER SLAB SHALL HAVE A MINIMUM BURIAL DEPTH OF 42", UNLESS NOTED OTHERWISE.
11. CONDUITS SHALL BE BURIED 42" (MINIMUM) BELOW GRADE WITH MARKER TAPE 6" ABOVE TOP OF CONDUIT, UNLESS NOTED OTHERWISE.
12. MINIMUM SIZE CONDUIT SHALL BE 1" (UNLESS NOTED OTHERWISE).
13. CONDUIT ROUTINGS AND DEVICE/EQUIPMENT LOCATIONS SHOWN ARE DIAGRAMMATIC ONLY. CONTRACTOR SHALL FIELD ROUTE AND LOCATE AS REQUIRED.
14. CONTRACTOR SHALL PROVIDE PULL BOXES IN POWER CIRCUIT CONDUIT AS REQUIRED TO LIMIT THE NUMBER OF BENDS TO A MAXIMUM OF 270° OR THREE 90° BENDS.
15. ALL WIRE SHALL BE COPPER.
16. ALL ELECTRICAL CIRCUITS SHALL INCLUDE A GREEN GROUNDING CONDUCTOR SIZED PER NEC.
17. CONDUCTORS SHALL BE TERMINATED ON TERMINAL BLOCKS.
18. THE CONTRACTOR SHALL TAG ALL POWER AND CONTROL SYSTEM CABLING AT ALL TERMINATION POINTS.
19. FINAL CONNECTION TO ALL EQUIPMENT IS SHOWN DIAGRAMMATIC. PROVIDE FINAL CONNECTION AS REQUIRED PER MANUFACTURER OF EQUIPMENT.
20. CONTRACTOR SHALL MAINTAIN A SET OF PRINTS AND MARK-UP DURING CONSTRUCTION TO REFLECT "AS-BUILT" CONDITIONS. PRINTS SHALL BE DELIVERED TO THE ENGINEER UPON COMPLETION OF THE PROJECT.
21. ALL HARDWARE SHALL BE STAINLESS STEEL.
22. ALUMINUM CONDUIT SHALL BE COATED WITH (2) WRAPS OF ANTI-CORROSION TAPE OR RUN THROUGH A SCHEDULE 80 PVC SLEEVE TO WHEN IN CONTACT WITH CONCRETE.
23. BARE COPPER SHALL BE COATED WITH (2) WRAPS OF ANTI-CORROSION TAPE OR RUN THROUGH A SCHEDULE 80 PVC SLEEVE TO WHEN IN CONTACT WITH CONCRETE.
24. ENGINEER OF RECORD SHALL BE RESPONSIBLE FOR FINAL SIZING OF ALL EQUIPMENT.

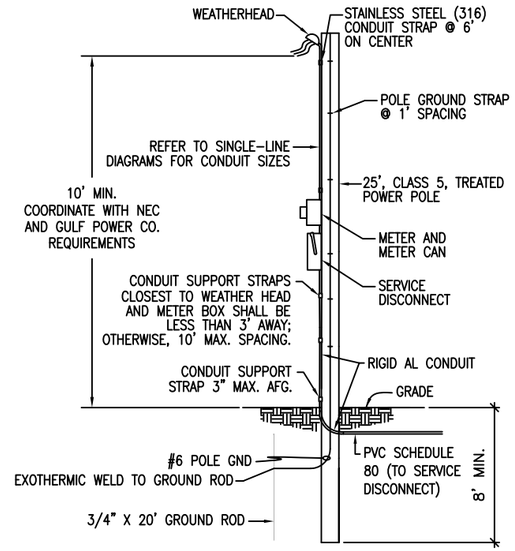

SERVICE LATERAL CONDUIT SHALL BE 3" (MIN) SCHEDULE 80 PVC BELOW GRADE AND 3" (MIN) RIGID AL CONDUIT ABOVE GRADE. ANY REQUIREMENTS BY THE UTILITY COMPANY SHALL PREVAIL OVER THE REQUIREMENTS OUTLINED HERE AND SHALL BE COORDINATED BY THE ELECTRICAL CONTRACTOR PRIOR TO INSTALLATION.

A3 UTILITY POLE DETAIL
NOT TO SCALE

ALL WORK SHALL BE CONSTRUCTED IN ACCORDANCE WITH THE LATEST EDITION OF THE E.C.U.A. STANDARD SPECIFICATIONS

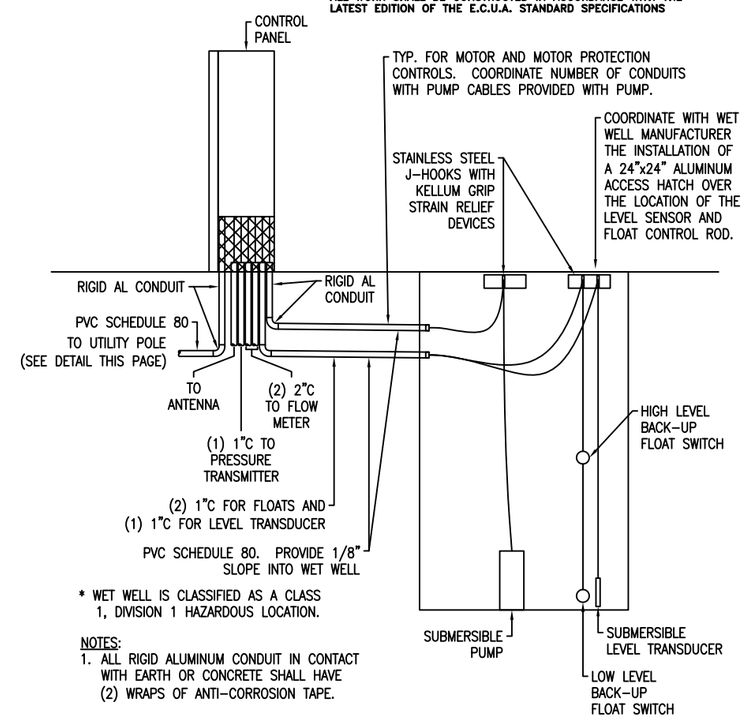

* WET WELL IS CLASSIFIED AS A CLASS 1, DIVISION 1 HAZARDOUS LOCATION.

NOTES:
1. ALL RIGID ALUMINUM CONDUIT IN CONTACT WITH EARTH OR CONCRETE SHALL HAVE (2) WRAPS OF ANTI-CORROSION TAPE.

B4 TYPICAL WET WELL SECTION DETAIL
NOT TO SCALE

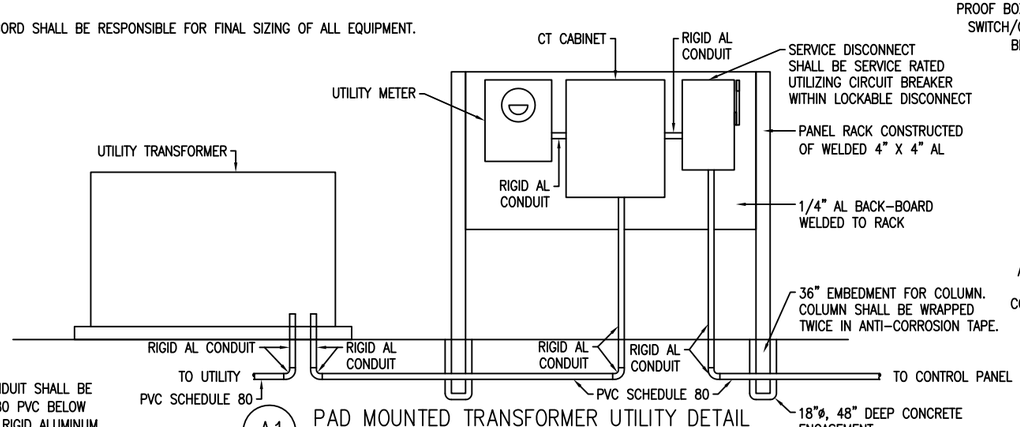

* SERVICE LATERAL CONDUIT SHALL BE 3" (MIN) SCHEDULE 80 PVC BELOW GRADE AND 3" (MIN) RIGID ALUMINUM CONDUIT ABOVE GRADE.

A1 PAD MOUNTED TRANSFORMER UTILITY DETAIL
NOT TO SCALE

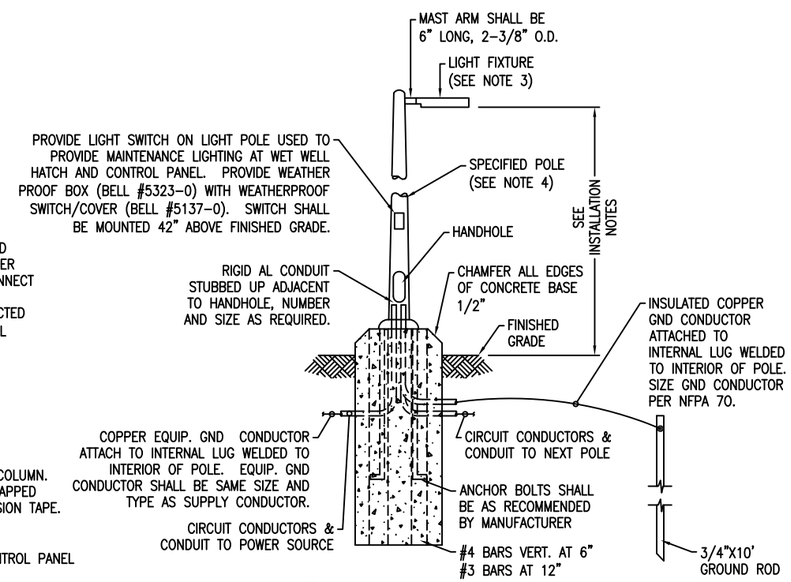

A4 LIGHT POLE INSTALLATION DETAIL
NOT TO SCALE

LIGHTING PERFORMANCE CRITERIA:
1. LIGHTING FIXTURE LAYOUT SHALL BE BASED UPON ACHIEVING 20 FOOT CANDLES (+/- 20%) AT THE FRONT OF THE CONTROL PANEL (WORK-PLANE OF 24" AFG) AND AT THE WET WELL ACCESS HATCH (WORKPLANE OF 0" AFG).
2. GENERAL SECURITY LIGHTING SHALL ENCOMPASS ACCESS GATE AND ALL PIPING/EQUIPMENT AT A MIN: AVERAGE 1 FOOT-CANDLE (+/- 20%, AT WORKPLANE OF 0" AFG).
3. REFER TO LIGHTING CONTROL DIAGRAM ON SHEET No. 18 FOR ADDITIONAL REQUIREMENTS.

LIGHT POLE INSTALLATION NOTES:
1. BURIAL AND DIAMETER DIMENSIONS INDICATED ARE FOR NOMINAL MINIMAL SIZES ONLY. FINAL DIMENSIONS SHALL BE DETERMINED BY A REGISTERED STRUCTURAL ENGINEER IN THE STATE OF FLORIDA. BASED UPON FIXTURES PROVIDED. PROVIDE SIGNED, DATED, AND SEALED PLANS FOR EACH INSTALLATION TYPE AND FIXTURE TYPE AS PART OF LIGHTING SUBMITTAL PACKAGE.
2. THE POLE AND FOUNDATION DESIGN SHALL BE BY A DELEGATED PROFESSIONAL ENGINEER TO MEET THE FOLLOWING CRITERIA:
   2.1. DESIGN WIND SPEED 160 MPH WITH A 1.3 GUST FACTOR. EXPOSURE CATEGORY C.
   2.2. SIZE EMBEDMENT FOR A MAXIMUM PERMANENT POLE DEFLECTION AFTER DESIGN WIND SPEED EVENT OF 1.00°.
   2.3. ALUMINUM, ROUND OR SQUARE, TAPERED.
3. FIXTURE SHALL BE AMERICAN ELECTRIC LIGHTING ATB2 FIXTURE, 40 LED, 1000mA DRIVER, 120V, TYPE 4, WITH PHOTOCONTROL.
4. REFER TO SPECIFICATIONS SECTION 16521 "EXTERIOR LIGHTING" FOR ADDITIONAL REQUIREMENTS.
5. LIGHT FIXTURES SHALL BE MOUNTED AT 15'-0" (MAXIMUM) ABOVE FINISHED GRADE.

REVISIONS	BY

IMPROVEMENTS TO WASTEWATER COLLECTION SYSTEM
LIFT STATION CONSTRUCTION DETAILS
ELECTRICAL STANDARDS

EMERALD COAST UTILITIES AUTHORITY

APPROVED BY:

Drawn:
Designed:
Checked:
Date: 12/18/2014
Scale:
Project No:
Sheet No. 17
Of 18 Sheets

ALL WORK SHALL BE CONSTRUCTED IN ACCORDANCE WITH THE LATEST EDITION OF THE E.C.U.A. STANDARD SPECIFICATIONS

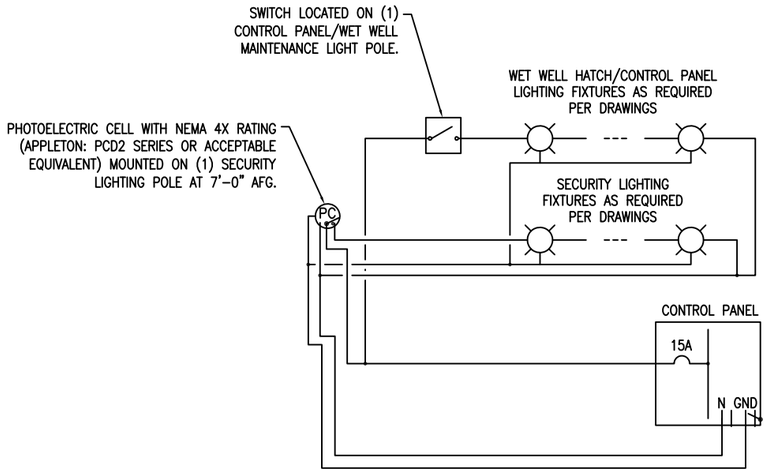

C2 TYPICAL LIGHTING CONTROL DIAGRAM

NOT TO SCALE

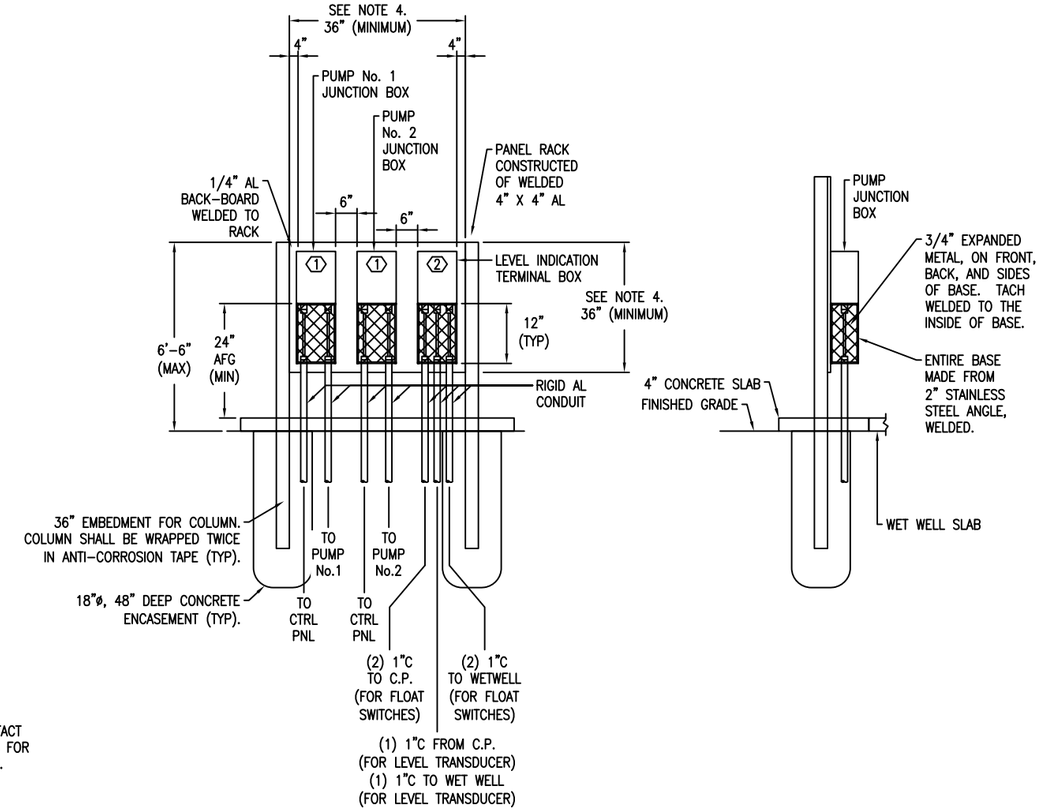

FRONT ELEVATION

SIDE ELEVATION

DETAIL NOTES:

1. THIS DETAIL SHALL ONLY APPLY WHEN THE CONTROL PANEL CANNOT BE PLACED WITHIN 10'-0" OF THE WET WELL TO ALLOW FOR CONNECTION OF STANDARD 50 FOOT PUMP CABLE CONNECTIONS.
2. BACKBOARD SHALL BE PLACED AT THE EDGE OF THE WET WELL SLAB BETWEEN THE WET WELL AND CONTROL PANEL.
3. JUNCTION BOXES SHALL BE MOUNTED SUCH THAT THEY ARE FACING THE WET WELL.
4. ENGINEER/CONTRACTOR SHALL SIZE JUNCTION BOXES AND BACKBOARDS BASED UPON INSTALLATION REQUIREMENTS PROVIDED AT TIME OF DESIGN.

KEY NOTES

1 REFER TO "TYPICAL PUMP JUNCTION BOX ELEVATION" (THIS SHEET) FOR ADDITIONAL REQUIREMENTS.

2 REFER TO "TYPICAL LEVEL INDICATION JUNCTION BOX ELEVATION" (THIS SHEET) FOR ADDITIONAL REQUIREMENTS.

A4 TYPICAL PUMP JUNCTION BOXES

NOT TO SCALE

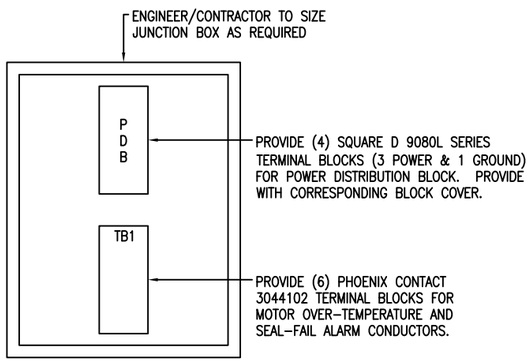

INTERIOR ELEVATION

DETAIL NOTES:

1. ALL TERMINAL BLOCKS SHALL BE PROVIDED WITH CORRESPONDING END BRACKETS AND END COVERS.
2. PROVIDE SEPARATE GROUND LUG IN EACH JUNCTION BOX, BONDED TO JUNCTION BOX.

A1 TYPICAL PUMP JUNCTION BOX ELEVATION

NOT TO SCALE

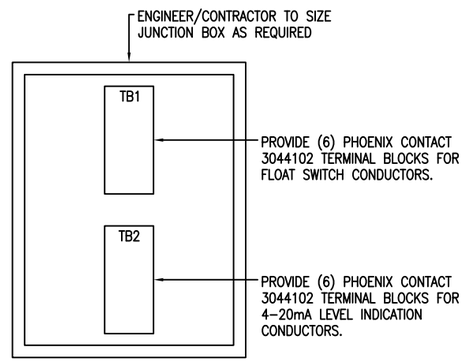

INTERIOR ELEVATION

DETAIL NOTES:

1. ALL TERMINAL BLOCKS SHALL BE PROVIDED WITH CORRESPONDING END BRACKETS AND END COVERS.
2. PROVIDE SEPARATE GROUND LUG IN EACH JUNCTION BOX, BONDED TO JUNCTION BOX.

A3 TYPICAL LEVEL INDICATION JUNCTION BOX ELEVATION

NOT TO SCALE

REVISIONS	BY

IMPROVEMENTS TO WASTEWATER COLLECTION SYSTEM

LIFT STATION CONSTRUCTION DETAILS

ELECTRICAL STANDARDS

EMERALD COAST UTILITIES AUTHORITY

APPROVED BY:

Drawn:
Designed:
Checked:
Date: 12/18/2014
Scale:
Project No:
Sheet No. 18
Of 18 Sheets