ALL WORK SHALL BE CONSTRUCTED IN ACCORDANCE WITH THE LATEST EDITION OF THE E.C.U.A. STANDARD SPECIFICATIONS

# 240-208V 3ø 1HP - 15HP FULL VOLTAGE STARTER PANEL DESIGN - ALTERNATE

FOR

# EMERALD COAST UTILITIES AUTHORITY ESCAMBIA COUNTY, FL


| SHEET NO. | SHEET DESCRIPTION |
|---|---|
| 1 | MAIN POWER DISTRIBUTION SCHEMATIC |
| 2 | CONTROL SCHEMATIC |
| 3 | DIGITAL INPUTS SCHEMATIC |
| 4 | DIGITAL OUTPUTS & ANALOG INPUTS SCHEMATIC |
| 5 | ANALOG OUTPUTS & STARTER CONTROL SCHEMATIC |
| 6 | TERMINAL BLOCK LAYOUT AND FIELD CONNECTIONS |
| 7A | BACK-TO-BACK EXTERIOR PANEL LAYOUT & FIELD CONDUIT REQUIREMENTS |
| 8 | POWER & PUMP 1 INTERNAL PANEL LAYOUTS |
| 9 | PUMP 2 & CONTROL PANEL INTERNAL LAYOUTS |
| 10 | EQUIPMENT LIST |
| 11 | HORSEPOWER RELATED EQUIPMENT & POWER CONDUCTORS |
| 12 | PANEL TO PANEL CONDUCTORS & EQUIPMENT |
| 13 | PANEL TO PANEL WIRING |
| 14A | BACK-TO-BACK STAINLESS STEEL FRAME LAYOUT |
| 15 | TABLES, LEGENDS & TAGS |
| 16 | ISR INSTRUCTIONS |
| 17 | GENERAL NOTES AND DETAILS |
| 18 | GENERAL NOTES AND DETAILS |


| REVISIONS | BY |
|---|---|
| | |
| | |
| | |
| | |

IMPROVEMENTS TO WASTEWATER COLLECTION SYSTEM

LIFT STATION CONSTRUCTION DETAILS

ELECTRICAL STANDARDS

EMERALD COAST UTILITIES AUTHORITY

APPROVED BY:

Drawn:

Designed:

Checked:

Date: 12/18/2014

Scale:

Project No:

Sheet No. 0

Of 18 Sheets

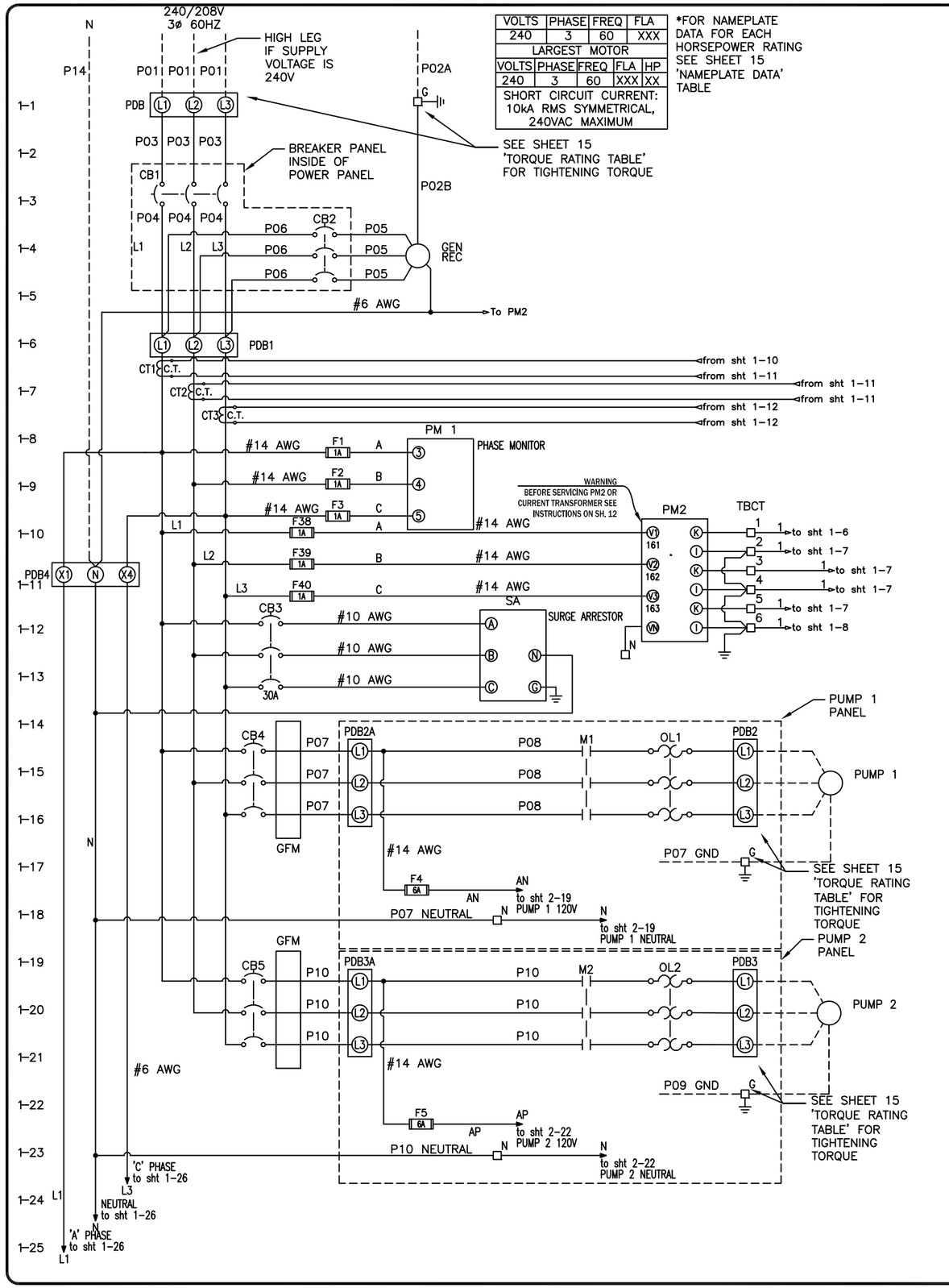


| VOLTS | PHASE | FREQ | FLA |
|---|---|---|---|
| 240 | 3 | 60 | XXX |
| LARGEST MOTOR | | | |
| VOLTS | PHASE | FREQ | FLA | HP |
| 240 | 3 | 60 | XXX | XX |
| SHORT CIRCUIT CURRENT: 10kA RMS SYMMETRICAL, 240VAC MAXIMUM | | | | |

*FOR NAMEPLATE DATA FOR EACH HORSEPOWER RATING SEE SHEET 15 'NAMEPLATE DATA' TABLE

NOTES:

ALL WORK SHALL BE CONSTRUCTED IN ACCORDANCE WITH THE LATEST EDITION OF THE E.C.U.A. STANDARD SPECIFICATIONS

1. THE COMPLETED CONTROL PANEL SHALL BE LABELED AND MANUFACTURED TO MEET U.L. 508A AND 698A CERTIFICATION.
2. CONTROL PANEL WIRING SHALL BE STRANDED COPPER, MINIMUM SIZE #16 AWG WITH 600V 90DEGREE C TYPE THHN INSULATION.
3. CONTROL PANEL WIRING SHALL BE NUMBERED AT BOTH ENDS WITH TYPE WRITTEN, HEAT SHRINKABLE WIRE MARKERS.
4. ALL WIRING WITHIN THE CONTROL PANEL SHALL BE COLOR CODED OR CODED USING ELECTRICAL TAPE IN SIZES WHERE COLORED INSULATION IS NOT AVAILABLE. THE FOLLOWING CODING SHALL BE USED:
   - 4.1. UNGROUNDED AC CONDUCTORS AT SUPPLY VOLTAGE – BLACK
   - 4.2. GROUNDED AC CURRENT CARRYING CONDUCTORS – WHITE
   - 4.3. UNGROUNDED AC CONDUCTORS BELOW SUPPLY VOLTAGE – RED
   - 4.4. UNGROUNDED AC CONTROL CONDUCTORS & CONDUCTORS THAT REMAIN ENERGIZED WHEN THE MAIN DISCONNECT IS OFF – YELLOW
   - 4.5. UNGROUNDED DC CONTROL CONDUCTORS – ORANGE
   - 4.6. GROUNDED DC CURRENT CARRYING CONDUCTORS – BROWN
   - 4.7. INTRINSICALLY SAFE WIRING – BLUE
   - 4.8. GROUND CONDUCTORS – GREEN
5. SEE SHEETS 11 & 12 FOR DETAILS REGARDING ALL POWER CONDUCTORS LABELED PXX.
6. SEE SHEET 11 'HORSEPOWER RELATED COMPONENTS EQUIPMENT LIST' FOR RATINGS OF OVERCURRENT PROTECTION DEVICES.

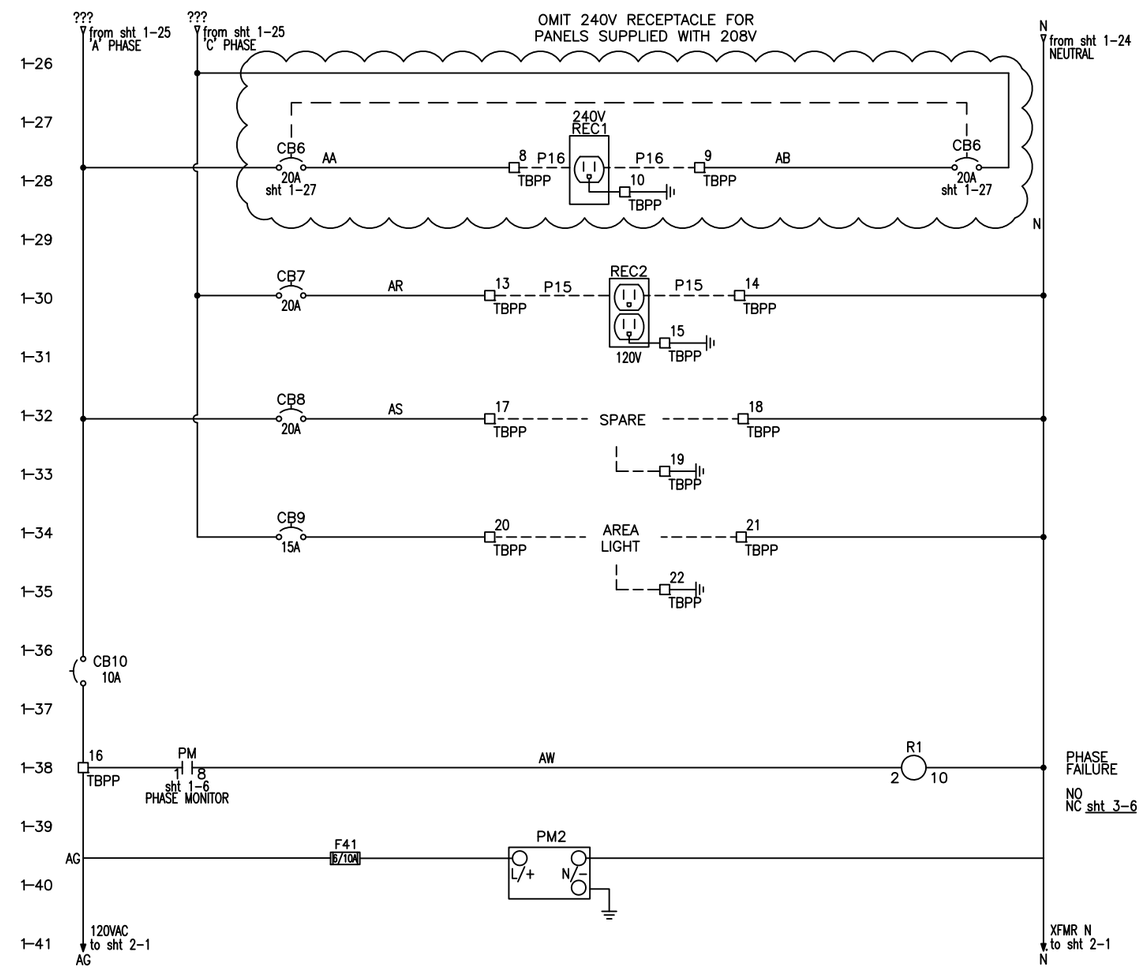


| REVISIONS | BY |
|---|---|
| | |
| | |
| | |
| | |

IMPROVEMENTS TO WASTEWATER COLLECTION SYSTEM

# LIFT STATION CONSTRUCTION DETAILS

## ELECTRICAL STANDARDS

EMERALD COAST UTILITIES AUTHORITY

APPROVED BY:

| | |
|---|---|
| Drawn: | |
| Designed: | |
| Checked: | |
| Date: | 12/18/2014 |
| Scale: | |
| Project No: | |
| Sheet No. | 1 |
| | Of 18 Sheets |

ALL WORK SHALL BE CONSTRUCTED IN ACCORDANCE WITH THE LATEST EDITION OF THE E.C.U.A. STANDARD SPECIFICATIONS

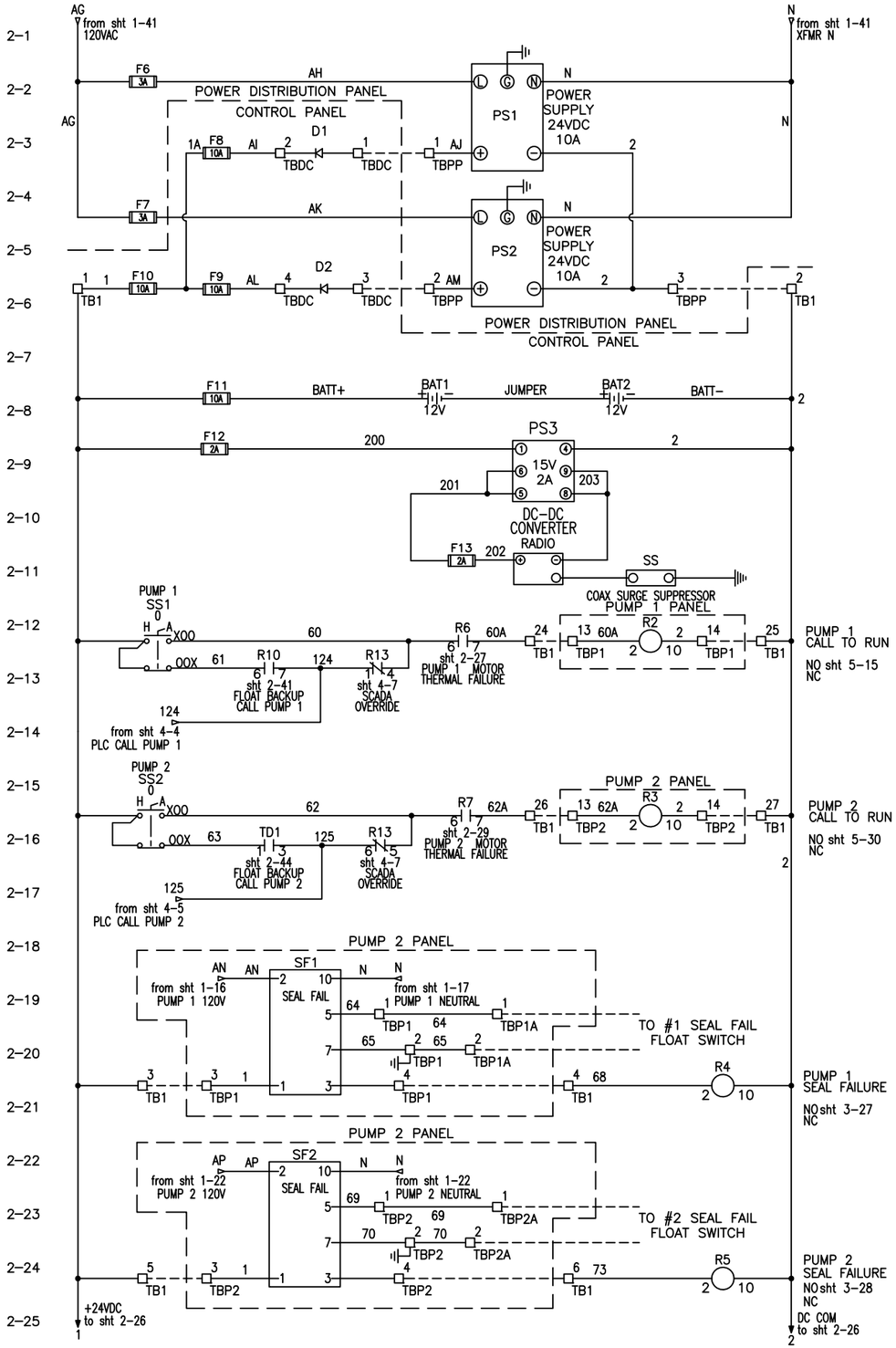


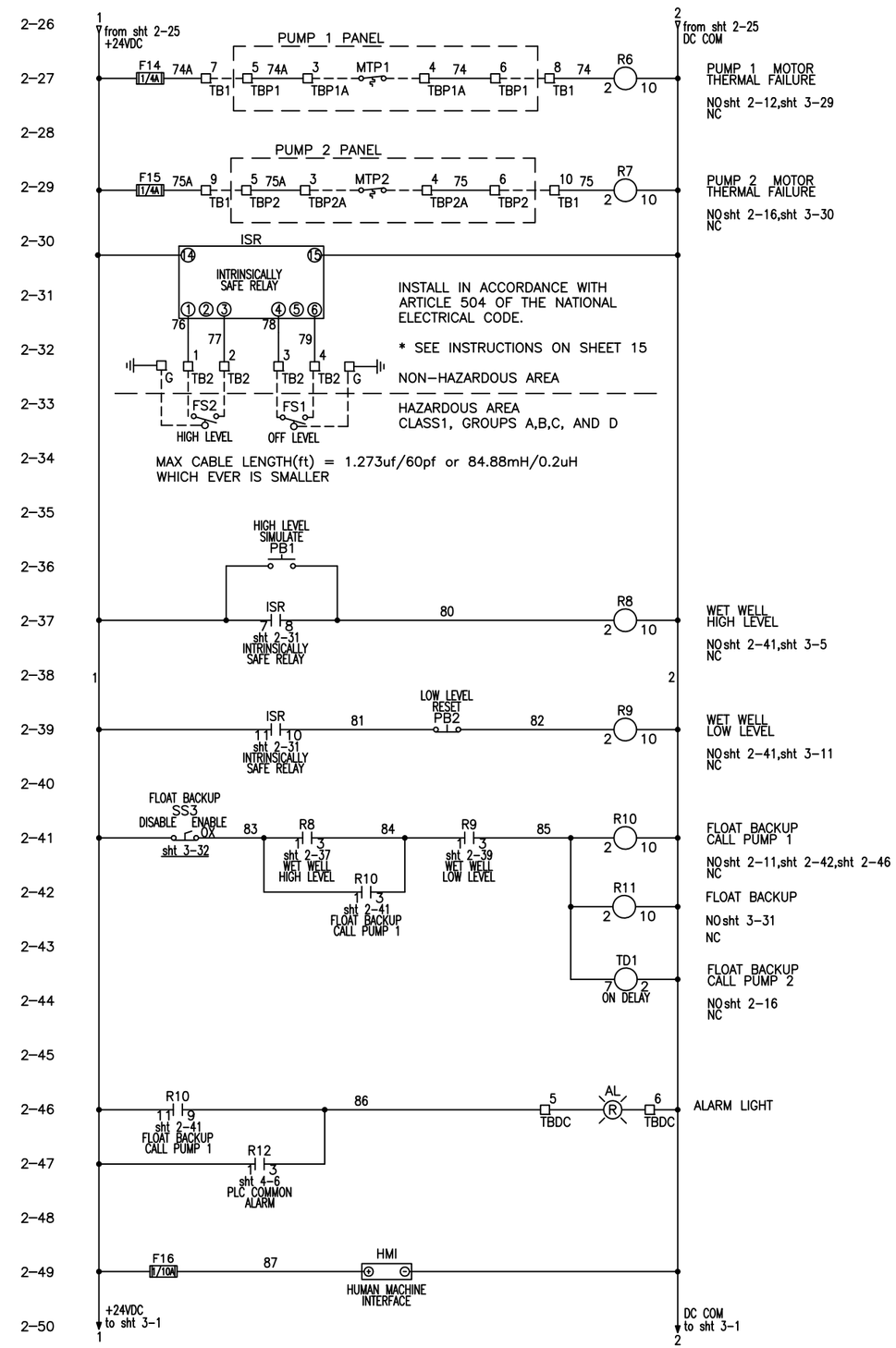


| REVISIONS | BY |
|---|---|
| | |
| | |
| | |
| | |

# IMPROVEMENTS TO WASTEWATER COLLECTION SYSTEM
# LIFT STATION CONSTRUCTION DETAILS
## ELECTRICAL STANDARDS

EMERALD COAST UTILITIES AUTHORITY

APPROVED BY:

Drawn:
Designed:
Checked:
Date: 12/18/2014
Scale:
Project No:
Sheet No. 2
Of 18 Sheets

ALL WORK SHALL BE CONSTRUCTED IN ACCORDANCE WITH THE LATEST EDITION OF THE E.C.U.A. STANDARD SPECIFICATIONS

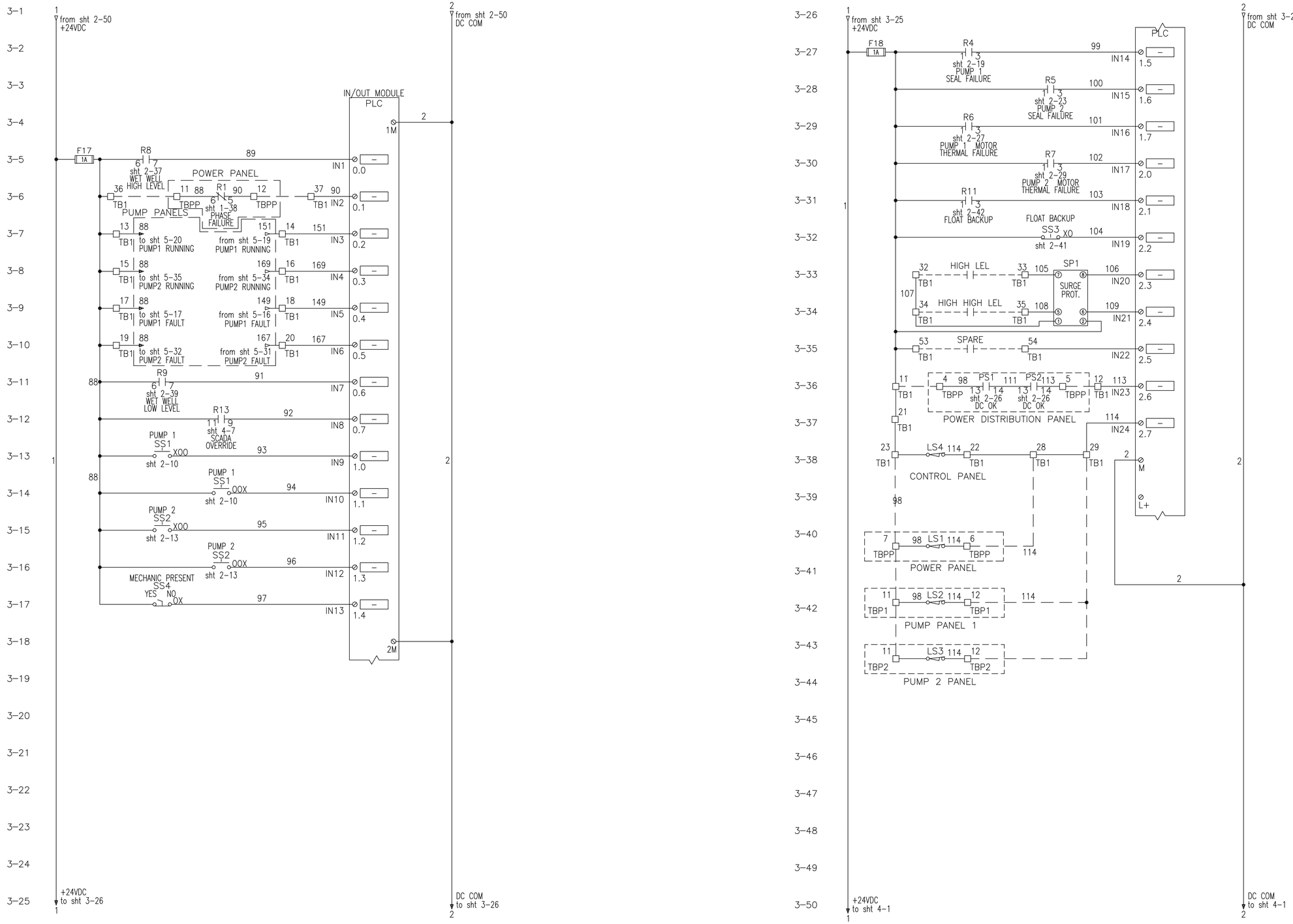


| REVISIONS | BY |
|---|---|
| | |
| | |
| | |
| | |

IMPROVEMENTS TO WASTEWATER COLLECTION SYSTEM

# LIFT STATION CONSTRUCTION DETAILS

ELECTRICAL STANDARDS

ECUA EMERALD COAST UTILITIES AUTHORITY

APPROVED BY:

Drawn:
Designed:
Checked:
Date: 12/18/2014
Scale:
Project No:
Sheet No. 3
Of 18 Sheets

ALL WORK SHALL BE CONSTRUCTED IN ACCORDANCE WITH THE LATEST EDITION OF THE E.C.U.A. STANDARD SPECIFICATIONS

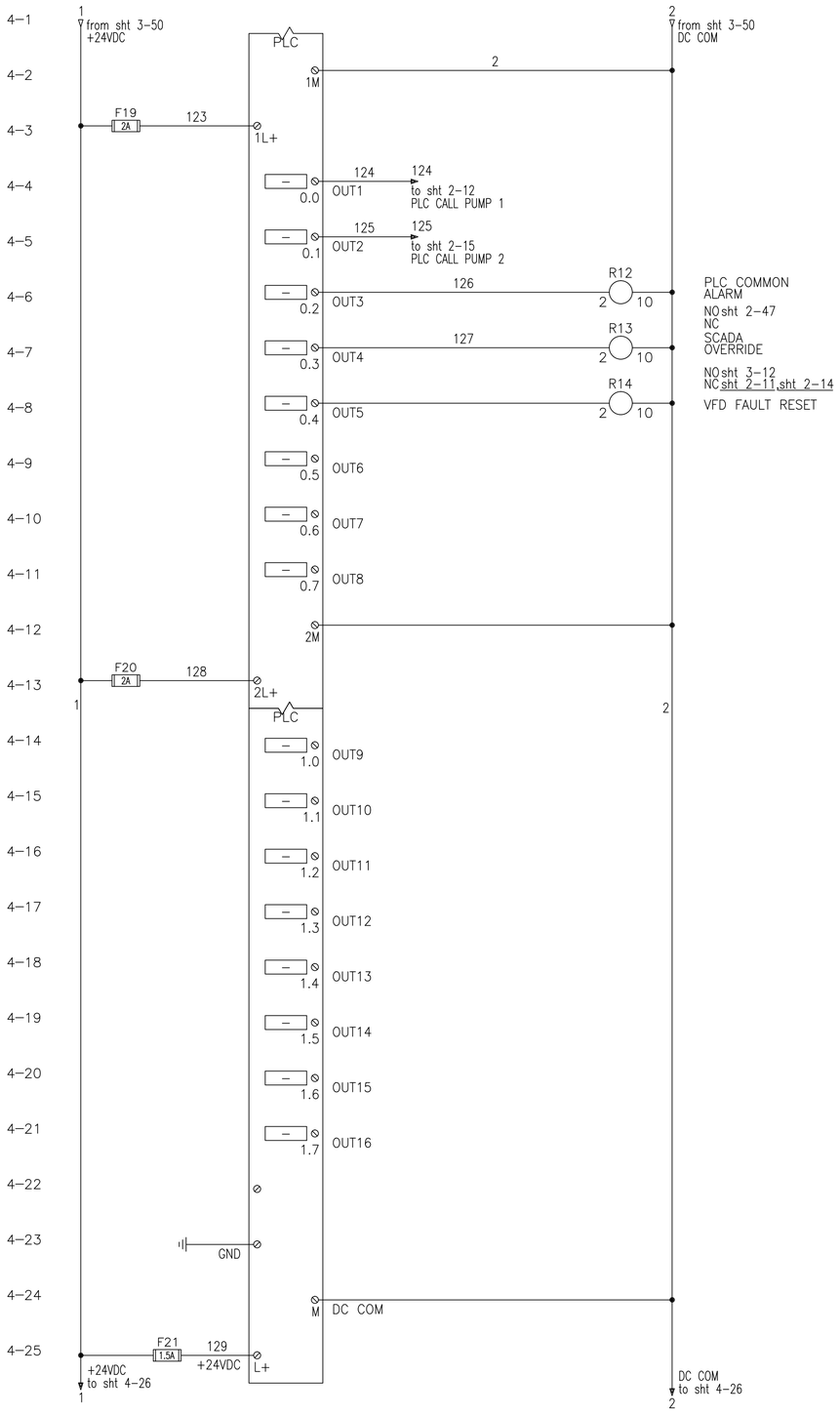


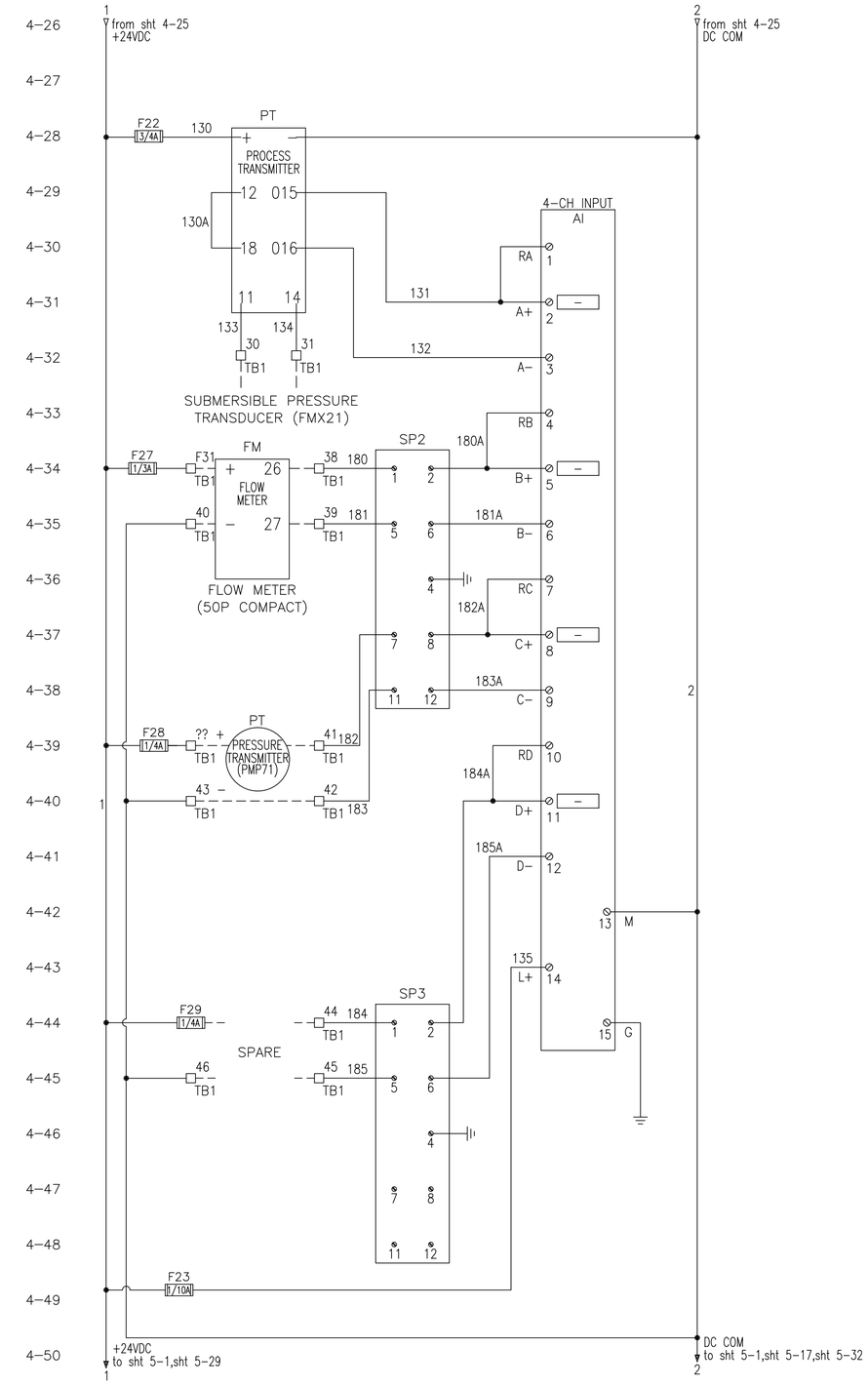


| REVISIONS | BY |
|---|---|
| | |
| | |
| | |
| | |

IMPROVEMENTS TO WASTEWATER COLLECTION SYSTEM

# LIFT STATION CONSTRUCTION DETAILS

## ELECTRICAL STANDARDS

ECUA
EMERALD COAST UTILITIES AUTHORITY

APPROVED BY:

Drawn:
Designed:
Checked:
Date: 12/18/2014
Scale:
Project No:
Sheet No. 4
Of 18 Sheets

ALL WORK SHALL BE CONSTRUCTED IN ACCORDANCE WITH THE LATEST EDITION OF THE E.C.U.A. STANDARD SPECIFICATIONS

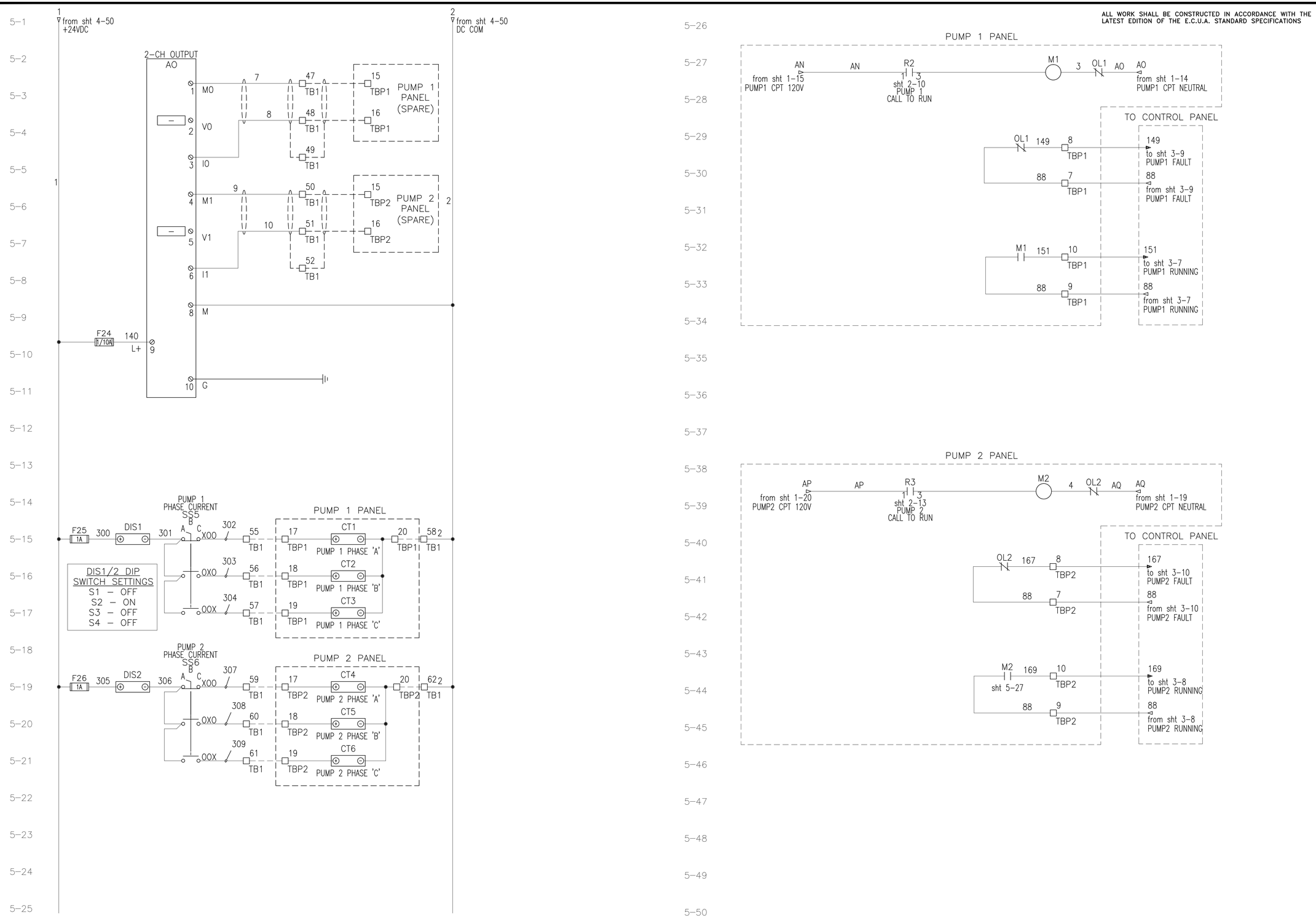


| REVISIONS | BY |
|---|---|
| | |
| | |
| | |
| | |

IMPROVEMENTS TO WASTEWATER COLLECTION SYSTEM

# LIFT STATION CONSTRUCTION DETAILS

ELECTRICAL STANDARDS

ECUA EMERALD COAST UTILITIES AUTHORITY

APPROVED BY:

Drawn:
Designed:
Checked:
Date: 12/18/2014
Scale:
Project No:
Sheet No. 5
Of 18 Sheets

ALL WORK SHALL BE CONSTRUCTED IN ACCORDANCE WITH THE LATEST EDITION OF THE E.C.U.A. STANDARD SPECIFICATIONS

## TBPP

| | | |
|---|---|---|
| AJ | 1 | |
| AM | 2 | |
| 2 | 3 | |
| | 4 | |
| 113 | 5 | |
| 114 | 6 | |
| | 7 | |
| AA | 8 | |
| AB | 9 | |
| | 10 | |
| 88 | 11 | |
| 90 | 12 | |
| AR | 13 | |
| N | 14 | |
| | 15 | |
| AG;AG | 16 | |
| AS | 17 | |
| N | 18 | |
| | 19 | |
| | 20 | |
| N | 21 | |
| | 22 | |

NOTE: THE TBCT FOR PM2 NEEDS TO INTEGRATED INTO THE POWER PANEL. CONFER WITH THE PROJECT ENGINEER.

POWER PANEL

## TB1

| | | |
|---|---|---|
| 1;1 | 1 | |
| | 1 | |
| | 1 | |
| | 1 | |
| | 1 | |
| 2 | 2 | |
| | 2 | |
| | 2 | |
| | 2 | |
| | 2 | |
| 1;1 | 3 | |
| 68 | 4 | |
| 1;1 | 5 | |
| 73 | 6 | |
| 74A | 7 | |
| 74 | 8 | |
| 75A | 9 | |
| 75 | 10 | |
| | 11 | |
| 113 | 12 | |
| 88;88 | 13 | |
| 151 | 14 | |
| 88;88 | 15 | |
| 169 | 16 | |
| 88;88 | 17 | |
| 149 | 18 | |
| 88;88 | 19 | |
| 167 | 20 | |
| | 21 | |
| 114 | 22 | |
| | 23 | |
| 60A | 24 | |
| 2;2 | 25 | |
| 62A | 26 | |
| 2;2 | 27 | |
| 114;114 | 28 | |
| 114;114 | 29 | |
| 133 | 30 | SUBMERSIBLE PRESSURE TRANSDUCER (FMX167) |
| 134 | 31 | HIGH LEL |
| 107 | 32 | |
| 105 | 33 | HIGH HIGH LEL |
| 107 | 34 | |
| 108 | 35 | |
| 88;88 | 36 | |
| 90 | 37 | |
| 180 | 38 | FLOW METER (50P COMPACT) (4–20mA SIGNAL) |
| 181 | 39 | |
| | F31 | FLOW METER (50P COMPACT) (POWER) |
| 2 | 40 | |
| 182 | 41 | |
| 183 | 42 | |
| | F32 | |
| 2 | 43 | |
| 184 | 44 | |
| 185 | 45 | |
| | F33 | |
| 2 | 46 | |
| 7 | 47 | |
| 8 | 48 | |
| | 49 | |
| 9 | 50 | |
| 10 | 51 | |
| | 52 | |
| | 53 | |
| | 54 | |
| 302 | 55 | |
| 303 | 56 | |
| 304 | 57 | |
| 2;2 | 58 | |
| 307 | 59 | |
| 308 | 60 | |
| 309 | 61 | |
| 2;2 | 62 | |
| 2;2 | 63 | PRESSURE TRANSMITTER (PMP71) (4–20mA SIGNAL) |
| 2;2 | 64 | |

CONTROL PANEL

## TB2

| | | |
|---|---|---|
| 76 | 1 | sht 2–34 HIGH LEVEL FS2 |
| 77 | 2 | |
| | G | |
| 78 | 3 | sht 2–34 OFF LEVEL FS1 |
| 79 | 4 | |
| | G | |

## TBDC

| | | |
|---|---|---|
| | 1 | |
| AI | 2 | |
| | 3 | |
| AL | 4 | |
| 86;86 | 5 | |
| 2;2 | 6 | |

## TBP1

| | | |
|---|---|---|
| 64 | 1 | |
| 65 | 2 | |
| 1 | 3 | |
| 68 | 4 | |
| 74A | 5 | |
| 74 | 6 | |
| 88 | 7 | |
| 149 | 8 | |
| 88 | 9 | |
| 151 | 10 | |
| | 11 | |
| 114;114 | 12 | |
| 60A | 13 | |
| 2 | 14 | |
| | 15 | |
| | 16 | |
| 302 | 17 | |
| 303 | 18 | |
| 304 | 19 | |
| 2 | 20 | |

## TBP1A

| | | |
|---|---|---|
| 64 | 1 | TO #1 SEAL FAIL FLOAT SWITCH |
| 74A | 3 | |
| 65 | 2 | sht 2–27 MTP1 |
| 74 | 4 | |

PUMP 1 PANEL

## TBP2

| | | |
|---|---|---|
| 69 | 1 | |
| 70 | 2 | |
| 1 | 3 | |
| 73 | 4 | |
| 75A | 5 | |
| 75 | 6 | |
| 88 | 7 | |
| 167 | 8 | |
| 88 | 9 | |
| 169 | 10 | |
| | 11 | |
| 114 | 12 | |
| 62A | 13 | |
| 2 | 14 | |
| | 15 | |
| | 16 | |
| 307 | 17 | |
| 308 | 18 | |
| 309 | 19 | |
| 2 | 20 | |

## TBP2A

| | | |
|---|---|---|
| 69 | 1 | TO #2 SEAL FAIL FLOAT SWITCH |
| 75A | 3 | |
| 70 | 2 | sht 2–29 MTP2 |
| 75 | 4 | |

PUMP 2 PANEL

TYPICAL FOR ALL TERMINAL BLOCKS ON THIS DRAWING

| |
|---|
| USE COPPER CONDUCTORS ONLY |
| 75 DEG C (167 DEG F) |
| 5.3–7.0 LB/IN TIGHTENING TORQUE |

## NOTES:

TERMINAL BLOCK DESIGNATIONS:

- TBPP – POWER PANEL TERMINAL BLOCK
- TB1 – CONTROL PANEL TERMINAL BLOCK
- TB2 – INTRINSICALLY SAFE TERMINAL BLOCK
- TBP1 – PUMP 1 TERMINAL BLOCK
- TBP1A – PUMP 1 TERMINAL BLOCK (MOTOR THERMAL AND SEAL FAILURE)
- TBP2 – PUMP 2 TERMINAL BLOCK
- TBP2A – PUMP 2 TERMINAL BLOCK (MOTOR THERMAL AND SEAL FAILURE)

| REVISIONS | BY |
|---|---|
| | |
| | |
| | |
| | |

IMPROVEMENTS TO WASTEWATER COLLECTION SYSTEM

# LIFT STATION CONSTRUCTION DETAILS

ELECTRICAL STANDARDS

EMERALD COAST UTILITIES AUTHORITY

APPROVED BY:

| | |
|---|---|
| Drawn: | |
| Designed: | |
| Checked: | |
| Date: | 12/18/2014 |
| Scale: | |
| Project No: | |
| Sheet No. | 6 |
| | Of 18 Sheets |

ALL WORK SHALL BE CONSTRUCTED IN ACCORDANCE WITH THE LATEST EDITION OF THE E.C.U.A. STANDARD SPECIFICATIONS

## NOTES

1. SEE SHEET 15 FOR SCHEDULES, LEGENDS AND PANEL TAGS.

## ATTENTION

THIS LAYOUT IS ONE OF TWO (2) POSSIBLE CHOICES – SEE SHEET 7 FOR THE OTHER OPTION. IF THIS LAYOUT OPTION IS SELECTED, SEE SHEET 14A FOR ASSOCIATED RACK DETAILS.

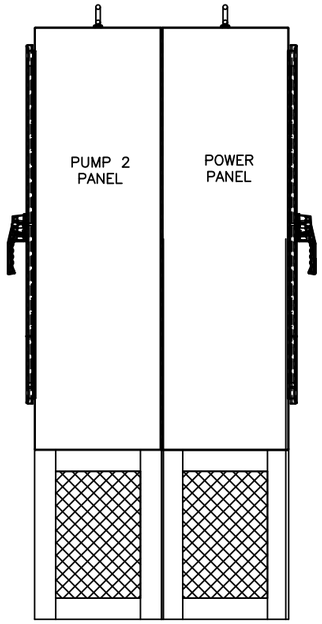


LEFT SIDE

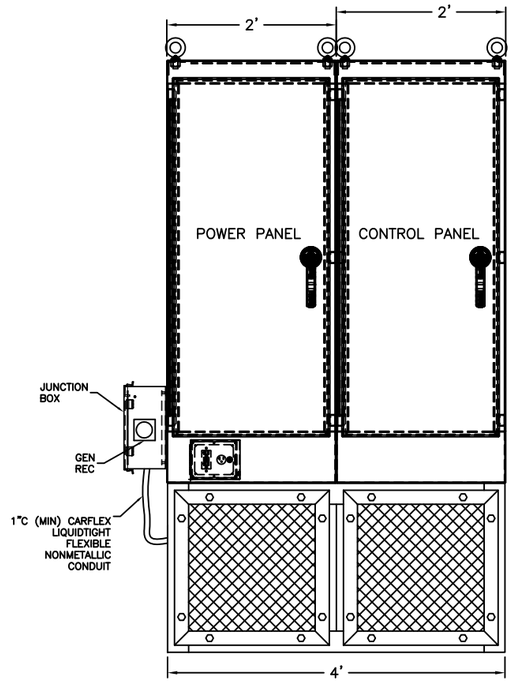


FRONT

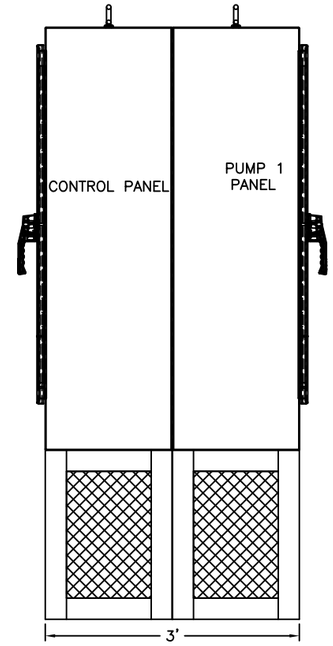


RIGHT SIDE

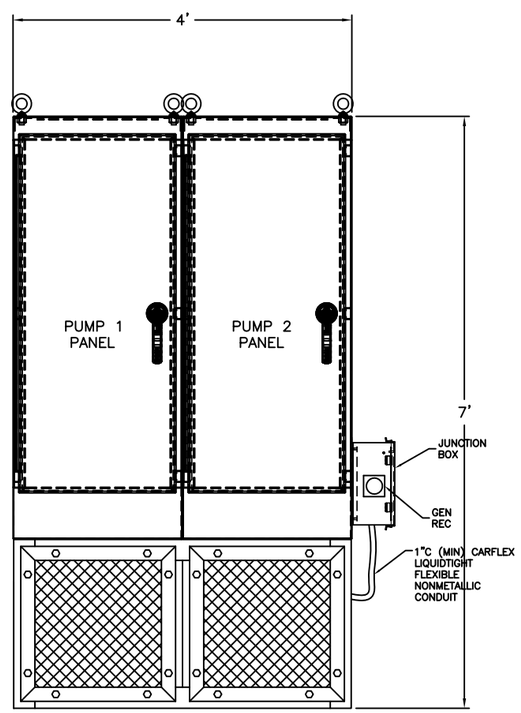


BACK

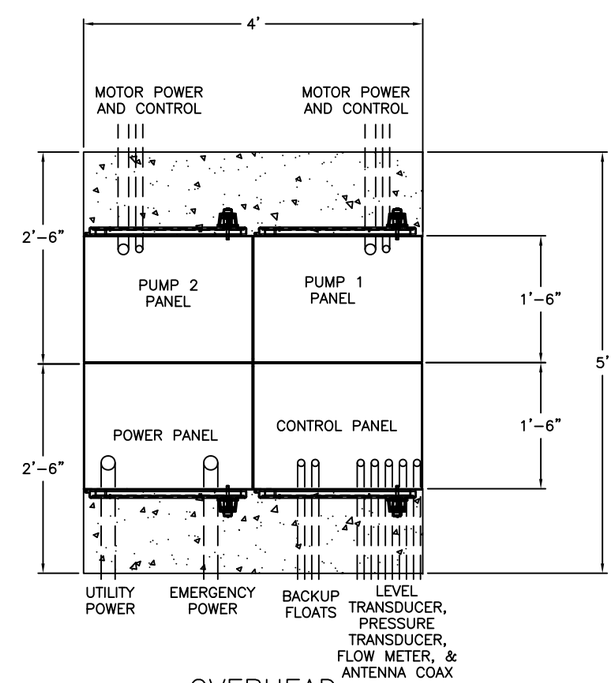


OVERHEAD

| REVISIONS | BY |
|---|---|
| | |
| | |
| | |
| | |

IMPROVEMENTS TO WASTEWATER COLLECTION SYSTEM

# LIFT STATION CONSTRUCTION DETAILS

ELECTRICAL STANDARDS

EMERALD COAST UTILITIES AUTHORITY

APPROVED BY:

| | |
|---|---|
| Drawn: | |
| Designed: | |
| Checked: | |
| Date: | 12/18/2014 |
| Scale: | |
| Project No: | |
| Sheet No. | 7A |
| | Of 18 Sheets |

ALL WORK SHALL BE CONSTRUCTED IN ACCORDANCE WITH THE LATEST EDITION OF THE E.C.U.A. STANDARD SPECIFICATIONS

## NOTES

1. SEE SHEET 15 FOR SCHEDULES, LEGENDS AND PANEL TAGS.
2. LAYOUT OF THE POWER & STARTER SECTIONS DEPICTS THE LARGEST POSSIBLE HORSEPOWER CONFIGURATION.

POWER ENCLOSURE LEFT SIDE PANEL LAYOUT

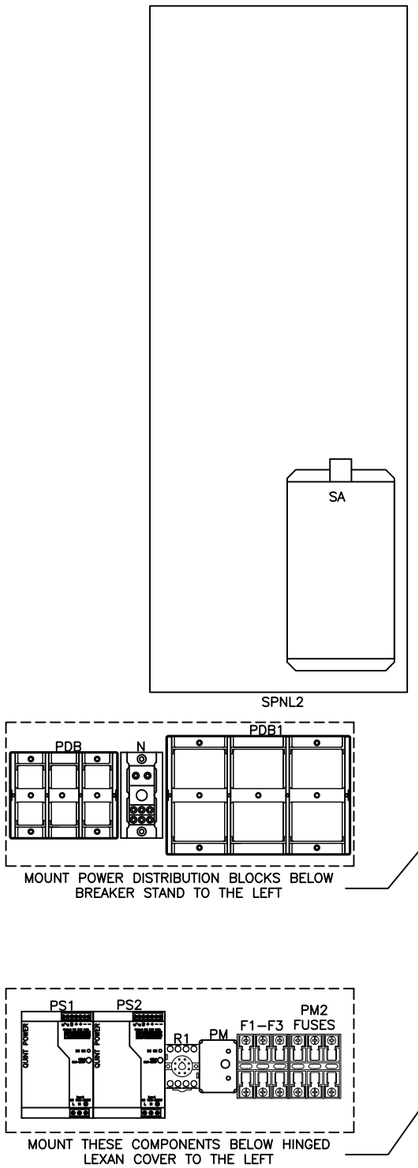


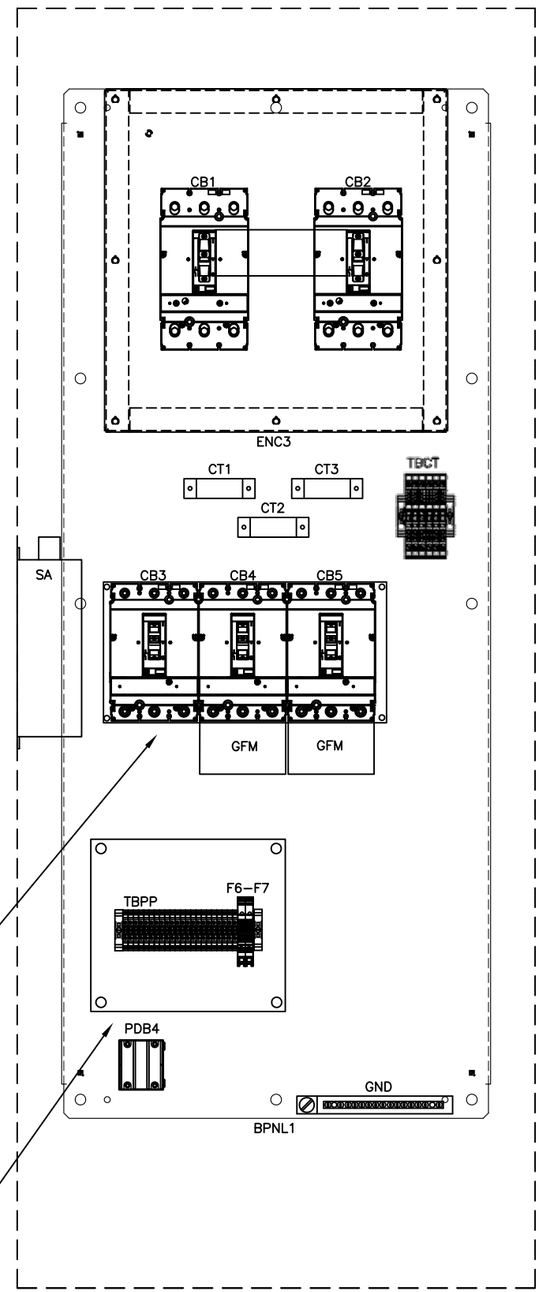


POWER ENCLOSURE BACKPANEL LAYOUT

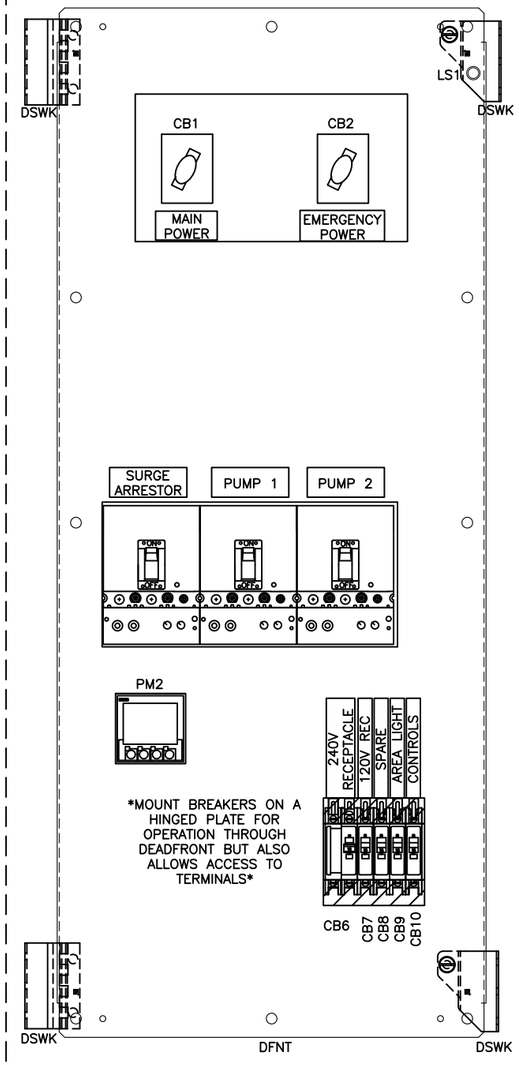


POWER ENCLOSURE DEADFRONT LAYOUT

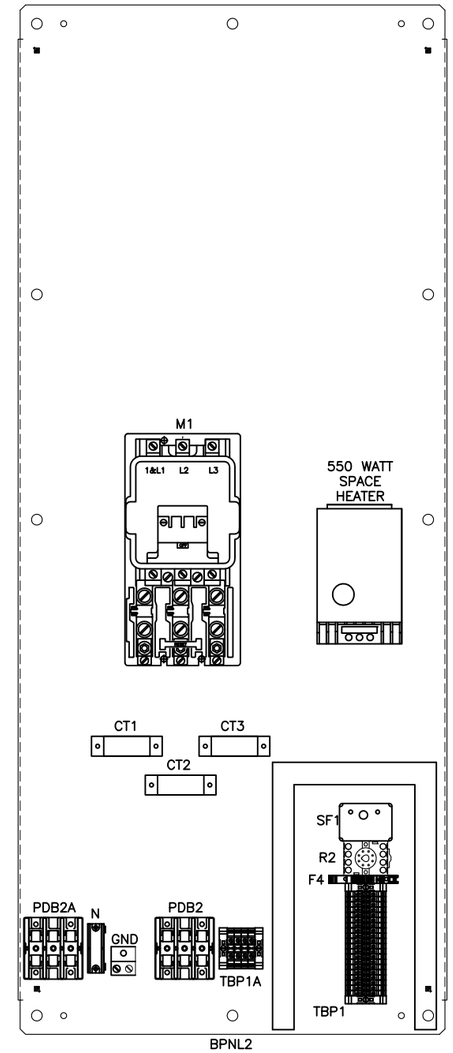


PUMP 1 ENCLOSURE BACKPANEL LAYOUT

| REVISIONS | BY |
|---|---|
| | |
| | |
| | |
| | |

IMPROVEMENTS TO WASTEWATER COLLECTION SYSTEM

# LIFT STATION CONSTRUCTION DETAILS

ELECTRICAL STANDARDS

EMERALD COAST UTILITIES AUTHORITY

APPROVED BY:

| | |
|---|---|
| Drawn: | |
| Designed: | |
| Checked: | |
| Date: | 12/18/2014 |
| Scale: | |
| Project No: | |
| Sheet No. | 8 |
| | Of 18 Sheets |

ALL WORK SHALL BE CONSTRUCTED IN ACCORDANCE WITH THE LATEST EDITION OF THE E.C.U.A. STANDARD SPECIFICATIONS

## NOTES

1. SEE SHEET 15 FOR SCHEDULES, LEGENDS AND PANEL TAGS.
2. LAYOUT OF THE VFD SECTION DEPICTS THE LARGEST POSSIBLE HORSEPOWER CONFIGURATION.

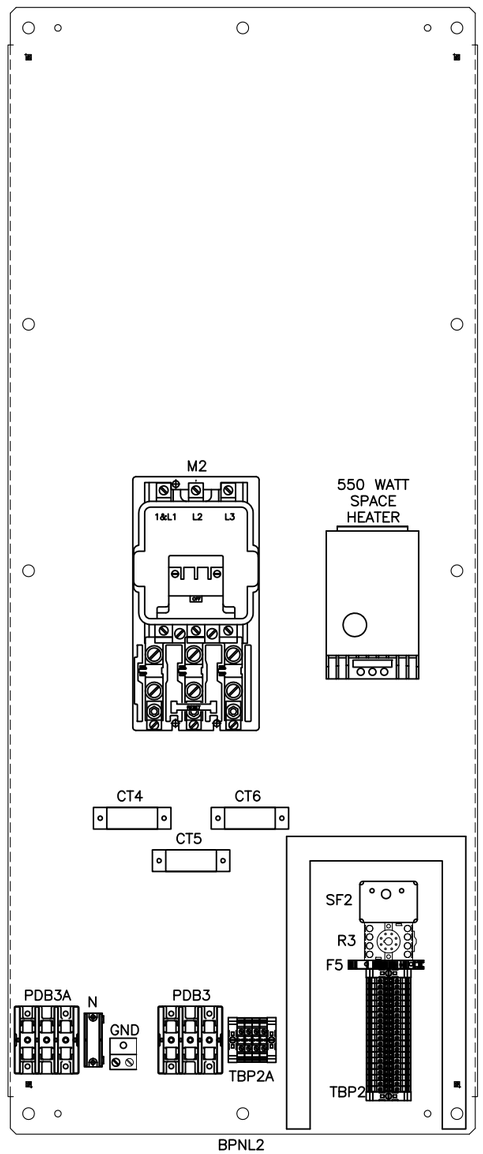


PUMP 2 ENCLOSURE BACKPANEL LAYOUT

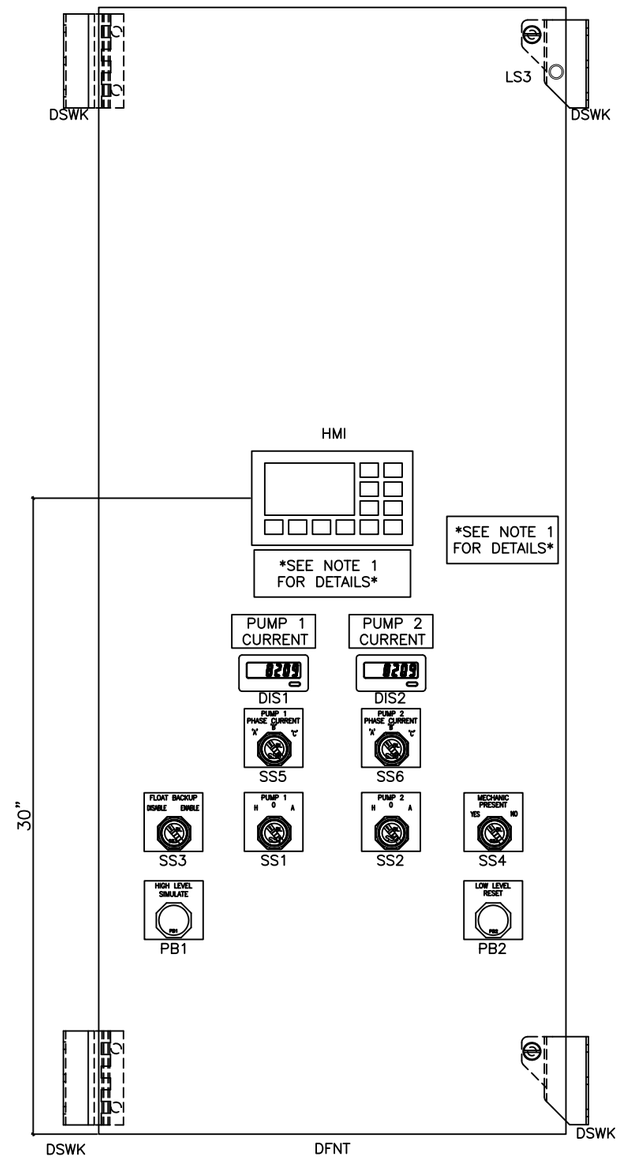


CONTROL ENCLOSURE DEADFRONT LAYOUT

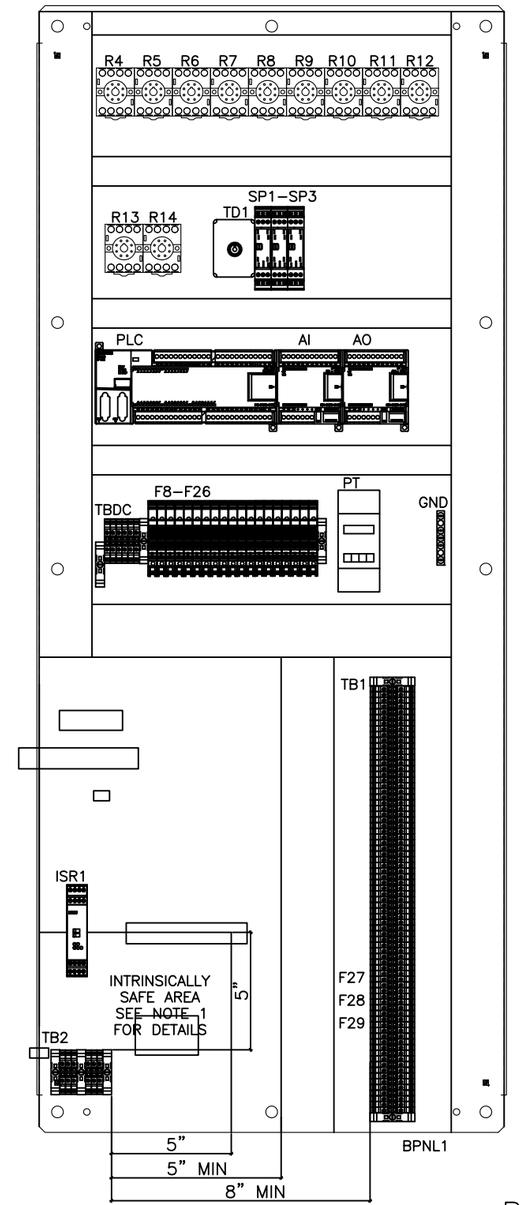


CONTROL ENCLOSURE BACKPANEL LAYOUT

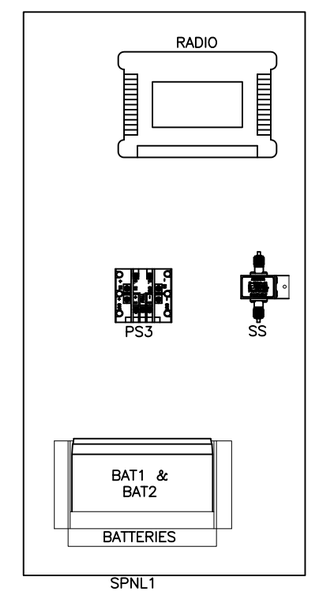


CONTROL ENCLOSURE RIGHT SIDEPANEL LAYOUT

| REVISIONS | BY |
|---|---|
| | |
| | |
| | |
| | |

IMPROVEMENTS TO WASTEWATER COLLECTION SYSTEM

# LIFT STATION CONSTRUCTION DETAILS

ELECTRICAL STANDARDS

EMERALD COAST UTILITIES AUTHORITY

APPROVED BY:

Drawn:
Designed:
Checked:
Date: 12/18/2014
Scale:
Project No:
Sheet No. 9
OF 18 Sheets

ALL WORK SHALL BE CONSTRUCTED IN ACCORDANCE WITH THE LATEST EDITION OF THE E.C.U.A. STANDARD SPECIFICATIONS

240-208V FVNR Equipment List

| Item | Tag | Panel | Description | Manufacturer | Model | Qty |
|---|---|---|---|---|---|---|
| 1 | ENC1 | All | 60X24X18 NEMA 4X SS Enclosure | Hoffman | A602418SSFSN4 | 4 |
| 2 | BPNL1 | All | 60x24 Painted Steel Backpanel | Hoffman | A60P24F1 | 4 |
| 3 | SPNL1 | Control | 28"H x 12"W Aluminum Sidepanel | EWS | Custom | 1 |
| 4 | DFNT | Power & Control | 60x24 Aluminum Deadfront Panel | EWS | Custom | 2 |
| 5 | DSWK | Power & Control | Door Swing Kit | Hoffman | ANADFK | 2 |
| 6 | FRM | Power | Expanded Metal Stainless Steel Frame | EWS | SEE DRAWINGS | 1 |
| 7 | PDB | Power | Incoming Power Distribution Block PDB | Square D | SEE HP TABLE SHEET 11 | 1 |
| 8 | PDB | Power | Incoming Power Distribution Block PDB Cover | Square D | SEE HP TABLE SHEET 11 | 1 |
| 9 | GND | Power | Power Panel Ground Bar | Square D | PK15GTA-L | 1 |
| 10 | ENC3 | Power | 16"H x 16"W x 8"D Screw Cover Type 3R Enclosure | Hoffman | A16168GSC | 1 |
| 11 | CB1 | Power | 600V Main Circuit Breaker | Square D | SEE HP TABLE SHEET 11 | 1 |
| 12 | CB2 | Power | 600V Emergency Circuit Breaker | Square D | SEE HP TABLE SHEET 11 | 1 |
| 13 | CB1,CB2 | Power | Mechanical Interlock for H/J Frame Circuit Breakers | Square D | S29369 | 1 |
| 14 | CB1,CB2 | Power | Door Mounted Rotary Handle for H/J Frame Circuit Breakers | Square D | S29338 | 2 |
| 15 | GEN REC | Power | NEMA 4X Generator Receptacle | Appleton | SEE HP TABLE SHEET 11 | 1 |
| 16 | PDB1 | Power | Main Power Distribution Block PDB1 | Square D | SEE HP TABLE SHEET 11 | 1 |
| 17 | PDB1 | Power | Main Power Distribution Block PDB1 Cover | Square D | SEE HP TABLE SHEET 11 | 1 |
| 18 | F1-F3, F38-F40 | Power | 3 Pole Rejection type Fuse Block | Bussmann | BC6033PQ | 2 |
| 19 | F1-F3, F38-F40 | Power | 1A Rejection Type Fuse, Class CC | Bussmann | KTK-R-1 | 6 |
| 20 | F1-F3, F38-F40 | Power | Fuse Cover | Bussmann | SAMI-7N | 6 |
| 21 | PM | Power | 240V Phase Monitor | Timemark | 257B | 1 |
| 22 | PM | Power | 600V, 8-Pin Relay Base | ABB | OT08PC | 1 |
| 23 | CB3-CB5 | Power | Breaker Stand | EWS | Custom | 1 |
| 24 | CB3 | Power | 30A 600V 3 Pole Circuit Breaker, Main Surge Arrestor | Square D | HDL36030 | 1 |
| 25 | SA | Power | Main Surge Arrestor | SSI | SEE HP TABLE SHEET 11 | 1 |
| 26 | CB4, CB5 | Power | 600V 3 Pole Circuit Breaker, Starter | Square D | SEE HP TABLE SHEET 11 | 2 |
| 27 | CB4, CB5 | Power | H & J Frame Circuit Breaker Locking System | Square D | S29371 | 2 |
| 28 | PDB2A, PDB3A | Pump 1 & 2 | Starter Power Distribution Block | Square D | 9080LBA362104 | 2 |
| 29 | PDB2A, PDB3A | Pump 1 & 2 | Starter Power Distribution Block Cover | Square D | 9080LB23 | 2 |
| 30 | M1, M2 | Pump 1 & 2 | NEMA Starter | Square D | SEE HP TABLE SHEET 11 | 2 |
| 31 | OL1, OL2 | Pump 1 & 2 | Overload Heaters | Square D | SEE HP TABLE SHEET 11 | 2 |
| 32 | OL1, OL2 | Pump 1 & 2 | Overload Contact, (2) N.C. | Square D | 9999-SO5 | 2 |
| 33 | GND | Pump 1 & 2 | Motor Ground Lug | NSI | 2-0T | 2 |
| 34 | PDB2, PDB3 | Pump 1 & 2 | Motor Power Distribution Block PDB2&3, (1)#14-2/0.....(1)#14-2/0 | Square D | 9080LBA362101 | 2 |
| 35 | PDB2, PDB3 | Pump 1 & 2 | Motor Power Distribution Block PDB2&3 Cover | Square D | 9080LB23 | 2 |
| 36 | CB7-CB11 | Power | Hinged Aluminum Bracked for Mounting 240/120V Circuit Breakers through Deadfront | EWS | Custom | 1 |
| 37 | PDB4 | Power | 240V/120V Power Distribution Block PDB4, (1) #14-2 ... (4) #18-10 | Square D | 9080LBA361104 | 1 |
| 38 | CB6 | Power | 20A, 240V, 2 Pole Circuit Breaker | Square D | QOU220 | 1 |
| 39 | REC1 | Power | 20A, 250V, 6-20R Receptacle | P&S | 5872I | 1 |
| 40 | CB7, CB8 | Power | 20A, 120V 1 Pole Circuit Breaker | Square D | QOU120 | 2 |
| 41 | REC2 | Power | 120V 20A GFCI Duplex Receptacle NEMA5-20R | P&S | 2094-I | 1 |
| 42 | REC1, REC2 | Power | Custom Receptacle Cover NEMA 4X S.S. | HOFFMAN | HIDRPSS-MOD | 1 |
| 43 | REC1, REC2 | Power | 3/4 1G AL FD BOX | Appelton | 4CS-1/2 | 2 |
| 44 | CB9 | Power | 15A, 120V, 1 Pole Circuit Breaker | Square D | QOU115 | 1 |
| 45 | CB10 | Power | 10A, 120V, 1 Pole Circuit Breaker | Square D | QOU110 | 1 |
| 46 | R1 | Power | 120V 3PDT General Purpose Relay w/ Indicator Lamp | Potter Brumfield | KRPA-14AN-120 | 1 |
| 47 | R1-R13, SF1, SF2 | All | 11 Pin Relay Base | ABB | NDS-11 | 15 |
| 48 | F4-F7 | Pump 1, 2 & Power | Fused Terminal Block w/ 120V Blown Fuse Indication | Allen Bradley | 1492-H4 | 4 |
| 49 | - | Pump 1, 2 & Power | 1492-H4 &H5 Fused Terminal Block End Cover | Allen Bradley | 1492-N37 | 4 |
| 50 | F6, F7 | Power | 3A Fuse | Bussmann | AGC-3 | 2 |
| 51 | PS1, PS2 | Power | 10A 24VDC Power Supply | Phoenix Contact | 2938604 | 2 |
| 52 | D1, D2 | Power | 10A Diode, P1000A | Newark | 51R7094 | 2 |
| 53 | - | Power | Custom Stand/Lexan Hinged Cover w/Alum Stand for TBPP & Power Supply Fuses | EWS | Custom | 1 |
| 54 | F8-F24 | Control | Fused Terminal Block w/ 24VDC Blown Fuse Indication | Allen Bradley | 1492-H5 | 17 |
| 55 | F8 - F11 | Control | 10A Fuse | Bussmann | AGC-10 | 4 |
| 56 | BAT1, BAT2 | Control | 12VDC Battery | Power Sonic | PS1290 | 2 |
| 57 | PS3 | Control | 24VDC-15VDC Converter, 2A | Vicor | V1-J12-EY-B1 | 1 |
| 58 | RADIO | Control | 400MHz Radio | GE MDS | SD04MD | 1 |
| 59 | RADIO | Control | DB9 Male/Male Gender Changer | Office Depot | 946660 | 1 |
| 60 | RADIO/SS | Control | 3 Foot LMR400UF Coaxial Jumper NMale to TNCMale | Tessco | 324503 | 1 |
| 61 | SS | Control | Coaxial Surge Suppressor, 100 - 512MHz | Polyphaser | VHF50HN | 1 |
| 62 | - | - | 50FT Coaxial Cable, NMale-Nmale, Wireless Solutions 400-07-07-P50 (Ship Loose ) | Tessco | 370875 | 1 |
| 63 | - | - | 400MHz Yagi Antenna w/ N Female Connector, MAXRAD MYA4506N (Ship Loose ) | Tessci | 37634 | 1 |
| 64 | - | - | Antenna Tower 5' Base Section, ROHN R-SB25G5 (Ship Loose) | Tessco | 64559 | 1 |
| 65 | - | - | Antenna Tower 10' Mid Section, ROHN R-25G (Ship Loose) | Tessco | 56866 | 1 |
| 66 | - | - | Antenna Tower 9' Top Section, ROHN R-25AG2 (Ship Loose) | Tessco | 70080 | 1 |
| 67 | - | - | 21' 1-1/4" S.S. Antenna Mast (Ship Loose) | Bell Steel | 23008 | 1 |
| 68 | F14, F15 | Control | 1/4A Fuse | Bussmann | AGC-1/4 | 2 |
| 69 | F12, F13, F19, F20 | Control | 2A Fuse | Bussmann | AGC-2 | 4 |
| 70 | SS1, SS2 | Control | 3 Position Selector Switch, 30MM | Square D | 9001SKS43BH2 | 2 |
| 71 | R2-R13 | Control | 24VDC 3PDT General Purpose Relay w/ Indicator Lamp | Potter Brumfield | KRPA-14DN-24 | 12 |
| 72 | SF1, SF2 | Control | 120V Seal Failure Relay | ATC | SPM-120-AAA-10K | 2 |
| 73 | ISR1 | Control | Intrinsically Safe Barrier Relay, 24VDC | Phoenix Contact | 2685476 | 1 |

240-208V FVNR Equipment List

| Item | Tag | Control | Description | Manufacturer | Model | Qty |
|---|---|---|---|---|---|---|
| 74 | TB2 | Control | Terminal Block, Blue TB2 | Phoenix Contact | 3044115 | 4 |
| 75 | TB2 | Control | Terminal Block, Blue End Barrier, TB2 | Phoenix Contact | 3047235 | 1 |
| 76 | TB2 | Control | Ground Terminal Blocks, TB2 | Phoenix Contact | 3044128 | 2 |
| 77 | PB1, PB2 | Control | Push Button, Black 1NO 1NC | Square D | 9001SKR1BH13 | 2 |
| 78 | SS3, SS4 | Control | 2 Position Selector Switch, 30MM | Square D | 9001SKS11BH2 | 2 |
| 79 | TD1 | Control | 24VDC 0-180 Second Time Delay Relay | Square D | RE48ATM12MW | 1 |
| 80 | TD1 | Control | 8 Pin Relay Base | ABB | NDS-8 | 1 |
| 81 | F16, F23, F24 | Control | 1/10A Fuse | Bussmann | AGC-1/10 | 3 |
| 82 | HMI | Control | ~~TD400C Te~~ **Panel View Plus 7, 6", Color; Manufacturer: Allen Bradley; Model # 2711P-T7C21D8S** | | ~~6 640-0AA00-0AX1~~ | ~~1~~ |
| 83 | F4, F5, F17, F18 | Control | 1A Fuse | Bussmann | AGC-1 | 4 |
| 84 | PLC | Control | ~~57-200 Du~~ **Compact Logix PLC Processor; Manufacturer: Allen Bradley; Model # 1769-L33ER** | | ~~7 216-2AD23-0XB0~~ | ~~1~~ |
| 85 | AI | Control | ~~57-200 4 P~~ **Analog Input Module, Isolated, 4Pt.; Manufacturer: Allen Bradley; Model # 1769-IF4I** | | ~~7 231-0HC22-0XA0~~ | ~~1~~ |
| 86 | AO | Control | ~~57-200 2 P~~ **Analog Output Module, 2Pt.; Manufacturer: Allen Bradley; Model # 1769-OF2** | | ~~7 232-0HB22-0XA0~~ | ~~1~~ |
| 87 | PLC | Control | ~~57-200 Co~~ **Serial Communications Cable; Manufacturer: - ; Model # CUSTOM** | | ~~7 901-3CB30-0XA0~~ | ~~1~~ |
| 88 | SP1-SP3 | Control | Plug In DI Surge Suppression, PT 4x1...DC | Phoenix Contact | 2838322 | 3 |
| 89 | SP1-SP3 | Control | Terminal Block Base for Plugable Surge Supression, PT 4x1-BE | Phoenix Contact | 2839363 | 3 |
| 90 | LS1-LS4 | Control | Panel Intrusion Switches, N.C. Contacts | NSI | 76030PS | 4 |
| 91 | F21 | Control | 1-1/2A Fuse, PLC Supply | Bussmann | AGC-1-1/2 | 1 |
| 92 | F22 | Control | 3/4A Fuse, Process Analyzer | Bussmann | AGC-3/4 | 1 |
| 93 | PT | Control | Process Transmitter | Endress & Hauser | RMA42AAAH2 | 1 |
| 94 | PT | - | Submersible Level Transducer, 33ft Range w/ 60ft Cable & Mounting Clamp (Ship Loose ) | Endress & Hauser | FMX21-FE221HGE21A | 1 |
| 95 | F25-F27 | Control | 24VDC Fused Terminal Block With Indication | Phoenix Contact | 3046090 | 3 |
| 96 | F25-F27 | Control | 1/4A Fuse, Analog Inputs | Bussmann | GMA-250 | 3 |
| 97 | TBPP,1,DC,P1, 1A, P2 & 2A | All | Terminal Block, Gray 26-10 AWG Wire | Phoenix Contact | 3044102 | 161 |
| 98 | TBPP,1,DC,P1, 1A, P2 & 2A | All | Terminal Block End Barrier | Phoenix Contact | 3047028 | 8 |
| 99 | TBPP,1,DC,P1, 1A, P2 & 2A | All | Terminal Block End Anchor | Phoenix Contact | 800886 | 17 |
| 100 | TBP1A, TBP2A | Pump 1 & 2 | Terminal Block, Gray 26-8 AWG Wire, TBVFD1A & TBVFD2A | Phoenix Contact | 3044131 | 8 |
| 101 | GND | Control | Control Panel Ground Bar | Square D | PK5GTA | 1 |
| 102 | - | - | Meter Socket (SHIP LOOSE) | Milbank | UAP9701-RRL | 1 |
| 103 | - | - | Stainless Steel 60' Float (SHIP LOOSE) | Anchor Scientific | P60NO-SST | 2 |
| 104 | - | - | Insulated Ground Neutral (SHIP LOOSE) | Square D | SN400LA | 1 |
| 105 | - | - | Ground Bar Kit (SHIP LOOSE) | Square D | PKDGTJ250 | 1 |
| 106 | - | - | NEMA 4A S.S. Disconnect (SHIP LOOSE) | Square D | J250DS | 1 |
| 107 | - | - | Antenna Mast Stabilization Plate (Ship Loose) | EWS | Custom | 1 |
| 108 | - | - | Stainless Steel 'U' Bolt, 2" Pole, 5/16" Diameter Bolt w/ 2-1/2" Threads (SHIP LOOSE) | | | 1 |
| 109 | - | - | 5/16" Stainless Steel Flat Washer for 'U' Bolt (SHIP LOOSE) | | | 2 |
| 110 | - | - | 5/16" Stainless Steel Lock Washer for 'U' Bolt (SHIP LOOSE) | | | 2 |
| 111 | - | - | 5/16" Stainless Steel Nut for 'U' Bolt (SHIP LOOSE) | | | 2 |
| 112 | - | - | Stainless Steel 'U' Bolt, 1/4" Diameter (SHIP LOOSE) | | | 2 |
| 113 | - | - | 1/4" Stainless Steel 1/4" Nut for 'U' Bolt (SHIP LOOSE) | | | 4 |
| 114 | - | - | 1-1/4" Reduction Bushing for Antenna Tower, ROHN R-TB50 (SHIP LOOSE) | Tessco | 36882 | 1 |
| 115 | PLC | Control | ~~57-200 Me~~ **Memory Card, Secure Digital, 1GB; Manufacturer: Allen Bradley; Model # 1784-SD1** | | ~~2918GF230AX0~~ | ~~1~~ |
| 116 | N | Power | Incoming Neutral Block | Square D | 9080LBA163206 | 1 |
| 117 | N | Power | Incoming Neutral Block Cover | Square D | 9080LB31 | 1 |
| 118 | N | Pump 1 & 2 | Neutral Block | Square D | 9080LBA161104 | 2 |
| 119 | SPNL2 | Power | 32"X12" Aluminum Sidepanel | EWS | Custom | 1 |
| 120 | CT1-CT6 | Pump 1 & 2 | Current Transducer; 4-20mA; 10, 20 or 50A Range; Loop Powered | NK Technologies | AT1-420-24L-FF | 6 |
| 121 | DIS1, DIS2 | Control | 4 Digit Loop Powered Process Indicator; 4-20mA | Red Lion | CUB4LP40 | 2 |
| 122 | SS5, SS6 | Control | 3 Position Selector Switch, 30MM | Square D | 9001SKS46BH2 | 2 |
| 123 | FM | Control | Flow Meter | Endress & Hauser | 50P Compact | 1 |
| 124 | PR | Control | Pressure Transmitter (0 - 150 PSI Transmitter) | Endress & Hauser | PMP71-AAC1P61RAAMA | 1 |
| 125 | PM2 | Power | Voltage Monitor, Siemens Sentron PAC3100 | Siemens | 7KM3133-0BA00-3AA0 | 1 |
| 126 | HTR | Pump 1 & 2 | 550W Heater | Stego | 02700.9-00 | 2 |
| 127 | TBCT | Power | | Phoenix Contact | 3047400 | 6 |
| 128 | TBCT | Power | | Phoenix Contact | 3034442 | 3 |
| 129 | TBCT | Power | | Phoenix Contact | 3034468 | 3 |
| 130 | TBCT | Power | | Phoenix Contact | 3047426 | 1 |
| 131 | CT1-CT3 | Power | Current Transformer, 200:5 Ratio | Square D | 2NR-201 | 3 |
| 132 | GFM | Power | Ground Fault Module | Square D | GFM150HD | 2 |
| 133 | F41 | Power | 1 Pole Rejection Type Fuse Block | Bussmann | BC6031PQ | 1 |
| 134 | F41 | Power | 0.6A Rejection Type Fuse, Class CC | Bussmann | KTK-R-6/10 | 1 |
| 135 | ENC4 | Power | 14 X 12 NEMA 4X SS Enclosure | Hoffman | LC353020SS | 1 |
| 136 | ENC4 | Power | 2" Galv. Rigid Coupling | - | - | 1 |
| 137 | ENC4 | Power | 2" x 1-1/2" Reducing Bushing | Crousehinds | - | 1 |
| 138 | ENC4 | Power | 2" Ring Seal Rubber Gasket | T&B | 5267 | 1 |
| 139 | ENC4 | Power | Cord Grip, 1.28 - 1.53 | Appleton | CG-128150 | 1 |
| 140 | ENC4 | Power | 1-1/2" Alum. Hub | Crousehinds | STA-S | 1 |
| **141** | **DI1-3** | **Control** | **Digital Input Module, 16Pt.** | **Allen Bradley** | **1769-IQ16** | **2** |
| **142** | **DO1** | **Control** | **Digital Output Relay Module, 16Pt.** | **Allen Bradley** | **1769-OW16** | **1** |
| **143** | **PLC-PS** | **Control** | **24VDC Power Supply for PLC** | **Allen Bradley** | **1769-PB4** | **1** |
| **144** | **COM** | **Control** | **Modbus Serial Communications Module** | **Allen Bradley** | **MVI69L-MBS** | **1** |
| **145** | **PLC** | **Control** | **Right End Cap** | **Allen Bradley** | **1769-ECR** | **1** |

**AS OF APRIL 15, 2015, DUE TO SIEMENS' DISCONTINUANCE OF PLC EQUIPMENT, ECUA WILL NOW UTILIZE ALLEN-BRADLEY EQUIPMENT PER THE INFORMATION SHOWN IN BOLD TEXT AND OUTLINED IN RED.**

REVISIONS BY

IMPROVEMENTS TO WASTEWATER COLLECTION SYSTEM

LIFT STATION CONSTRUCTION DETAILS

ELECTRICAL STANDARDS

EMERALD COAST UTILITIES AUTHORITY

APPROVED BY:

Drawn:
Designed:
Checked:
Date: 12/18/2014
Scale:
Project No:
Sheet No. 10
Of 18 Sheets

ALL WORK SHALL BE CONSTRUCTED IN ACCORDANCE WITH THE LATEST EDITION OF THE E.C.U.A. STANDARD SPECIFICATIONS

| Horsepower Related Compontents Equipment List | | | | | | | | | | | | | | | |
|---|---|---|---|---|---|---|---|---|---|---|---|---|---|---|---|
| Item | Tag | 240V Supply | | | | | | | 208V Supply | | | | | | |
| | | Horsepower | | | | | | | Horsepower | | | | | | |
| | | 1 | 2 | 3 | 5 | 7.5 | 10 | 15 | 1 | 2 | 3 | 5 | 7.5 | 10 | 15 |
| Incoming Power Distribution Block PDB | PDB | 9080LBA362101 | 9080LBA362101 | 9080LBA362101 | 9080LBA362101 | 9080LBA362101 | 9080LBA362101 | 9080LBA363101 | 9080LBA362101 | 9080LBA362101 | 9080LBA362101 | 9080LBA362101 | 9080LBA362101 | 9080LBA363101 | 9080LBA363101 |
| Incoming Power Distribution Block PDB Cover | PDB | 9080LB23 | 9080LB23 | 9080LB23 | 9080LB23 | 9080LB23 | 9080LB23 | 9080LB33 | 9080LB23 | 9080LB23 | 9080LB23 | 9080LB23 | 9080LB23 | 9080LB33 | 9080LB33 |
| Main Circuit Breaker | CB1 | HDL36060 | HDL36060 | HDL36070 | HDL36090 | HDL36110 | HDL36125 | HDL36175 | HDL36045 | HDL36050 | HDL36060 | HDL36090 | HDL36110 | HDL36150 | HDL36200 |
| Emergency Circuit Breaker | CB2 | HDL36060 | HDL36060 | HDL36070 | HDL36090 | HDL36110 | HDL36125 | HDL36175 | HDL36045 | HDL36050 | HDL36060 | HDL36090 | HDL36110 | HDL36150 | HDL36200 |
| Generator Receptacle | GEN REC | ADR1044-RS | ADR1044-RS | ADR1044-RS | ADR1044-RS | AR20044RS | AR20044RS | AR20044RS | ADR1044-RS | ADR1044-RS | ADR1044-RS | ADR1044-RS | AR20044RS | AR20044RS | AR20044RS |
| Main Power Distribution Block PDB1 | PDB1 | 9080LBA363206 | 9080LBA363206 | 9080LBA363206 | 9080LBA363206 | 9080LBA363206 | 9080LBA363206 | 9080LBA365208 | 9080LBA363206 | 9080LBA363206 | 9080LBA363206 | 9080LBA363206 | 9080LBA363206 | 9080LBA365208 | 9080LBA365208 |
| Main Power Distribution Block PDB1 Cover | PDB1 | 9080LB33 | 9080LB33 | 9080LB33 | 9080LB33 | 9080LB33 | 9080LB33 | 9080LB53 | 9080LB33 | 9080LB33 | 9080LB33 | 9080LB33 | 9080LB33 | 9080LB53 | 9080LB53 |
| Starter Circuit Breaker | CB4, CB5 | HDL36015SA | HDL36015SA | HDL36020SA | HDL36030SA | HDL36045SA | HDL36060SA | HDL36080SA | HDL36015SA | HDL36015SA | HDL36020SA | HDL36035SA | HDL36050SA | HDL36060SA | HDL36090SA |
| 3 Phase FVNR Starter | M1, M2 | 8536SAO12V02S | 8536SBO1V02S | 8536SBO1V02S | 8536SCO3V02S | 8536SCO3V02S | 8536SDO1V02S | 8536SDO1V02S | 8536SAO12V02S | 8536SBO1V02S | 8536SBO1V02S | 8536SCO3V02S | 8536SCO3V02S | 8536SDO1V02S | 8536SEO1V02S |
| Overloads | OL1, OL2 | B6.25 | B10.2 | B14 | B25 | B36 | B45 | B79 | B6.90 | B11.5 | B15.5 | B28 | B45 | B56 | CC74.6 |
| Surge Arrestor | SA | SDLA3D1 | SDLA3D1 | SDLA3D1 | SDLA3D1 | SDLA3D1 | SDLA3D1 | SDLA3D1 | SDLA3Y1 | SDLA3Y1 | SDLA3Y1 | SDLA3Y1 | SDLA3Y1 | SDLA3Y1 | SDLA3Y1 |
| Ground Fault Module | CB4, CB5 | GFM150HD | GFM150HD | GFM150HD | GFM150HD | GFM150HD | GFM150HD | GFM150HD | GFM150HD | GFM150HD | GFM150HD | GFM150HD | GFM150HD | GFM150HD | GFM150HD |

| Conductor Tag | | 240V | | | | | | | 208V | | | | | | |
|---|---|---|---|---|---|---|---|---|---|---|---|---|---|---|---|
| | | Horsepower | | | | | | | Horsepower | | | | | | |
| | | 1 | 2 | 3 | 5 | 7.5 | 10 | 15 | 1 | 2 | 3 | 5 | 7.5 | 10 | 15 |
| P-01, P-03 & P-04 | Description | (3)#6 | (3)#6 | (3)#4 | (3)#3 | (3)#2 | (3)#1 | (3)#2/0 | (3)#8 | (3)#8 | (3)#6 | (3)#3 | (3)#2 | (3)#1/0 | (3)#2/0 |
| | Manufacturer | N/A | N/A | N/A | N/A | N/A | N/A | N/A | N/A | N/A | N/A | N/A | N/A | N/A | N/A |
| | Catalog # | N/A | N/A | N/A | N/A | N/A | N/A | N/A | N/A | N/A | N/A | N/A | N/A | N/A | N/A |
| | Length (Ft. Max) | N/A | N/A | N/A | N/A | N/A | N/A | N/A | N/A | N/A | N/A | N/A | N/A | N/A | N/A |
| | Cable Dia (in) | 0.254" | 0.254" | 0.324" | 0.352" | 0.384" | 0.446" | 0.532" | 0.216" | 0.216" | 0.254" | 0.352" | 0.384" | 0.486" | 0.532" |
| | Appleton Connector | (3) -CG-1850 | (3) -CG-1850 | (3) -CG-3150 | (3) -CG-3150 | (3) -CG-3150 | (3)-CG-3775 | (3) -CG-5075 | (3) -CG-1850 | (3) -CG-1850 | (3) -CG-1850 | (3) -CG-3150 | (3) -CG-3150 | (3) -CG-3775 | (3) -CG-5075 |
| | Connector Range | 0.187"-0.312" | 0.187"-0.312" | 0.312"-0.437" | 0.312"-0.437" | 0.312"-0.437" | 0.375"-0.500" | 0.500"-0.625" | 0.187"-0.312" | 0.187"-0.312" | 0.187"-0.312" | 0.312"-0.437" | 0.312"-0.437" | 0.375"-0.500" | 0.500"-0.625" |
| | Meyers Hub | (3) 1/2" - STA-1 | (3) 1/2" - STA-1 | (3) 1/2" - STA-1 | (3) 1/2" - STA-1 | (3) 1/2" - STA-1 | (3) 3/4" - STA-2 | (3) 3/4" - STA-2 | (3) 1/2" - STA-1 | (3) 1/2" - STA-1 | (3) 1/2" - STA-1 | (3) 1/2" - STA-1 | (3) 1/2" - STA-1 | (3) 3/4" - STA-2 | (3) 3/4" - STA-2 |
| P-02A | Description | (1)#10 | (1)#10 | (1)#8 | (1)#8 | (1)#6 | (1)#6 | (1)#6 | (1)#10 | (1)#10 | (1)#10 | (1)#8 | (1)#6 | (1)#6 | (1)#6 |
| | Manufacturer | N/A | N/A | N/A | N/A | N/A | N/A | N/A | N/A | N/A | N/A | N/A | N/A | N/A | N/A |
| | Catalog # | N/A | N/A | N/A | N/A | N/A | N/A | N/A | N/A | N/A | N/A | N/A | N/A | N/A | N/A |
| | Length (Ft. Max) | N/A | N/A | N/A | N/A | N/A | N/A | N/A | N/A | N/A | N/A | N/A | N/A | N/A | N/A |
| | Cable Dia (in) | 0.164" | 0.164" | 0.216" | 0.216" | 0.254" | 0.254" | 0.254" | 0.164" | 0.164" | 0.164" | 0.216" | 0.254" | 0.254" | 0.254" |
| | Appleton Connector | (1)-GC-1250 | (1)-GC-1250 | (1)-GC-1850 | (1)-GC-1850 | (1)-GC-1850 | (1)-GC-1850 | (1)-GC-1850 | (1)-GC-1250 | (1)-GC-1250 | (1)-GC-1250 | (1)-GC-1850 | (1)-GC-1850 | (1)-GC-1850 | (1)-GC-1850 |
| | Connector Range | 0.125"-0.187" | 0.125"-0.187" | 0.187"-0.312" | 0.187"-0.312" | 0.187"-0.312" | 0.187"-0.312" | 0.187"-0.312" | 0.125"-0.187" | 0.125"-0.187" | 0.125"-0.187" | 0.187"-0.312" | 0.187"-0.312" | 0.187"-0.312" | 0.187"-0.312" |
| | Hub | (1) 1/2" - STA-1 | (1) 1/2" - STA-1 | (1) 1/2" - STA-1 | (1) 1/2" - STA-1 | (1) 1/2" - STA-1 | (1) 1/2" - STA-1 | (1) 1/2" - STA-1 | (1) 1/2" - STA-1 | (1) 1/2" - STA-1 | (1) 1/2" - STA-1 | (1) 1/2" - STA-1 | (1) 1/2" - STA-1 | (1) 1/2" - STA-1 | (1) 1/2" - STA-1 |
| P-02B | Description | (1)#10 | (1)#10 | (1)#8 | (1)#8 | (1)#6 | (1)#6 | (1)#6 | (1)#10 | (1)#10 | (1)#10 | (1)#8 | (1)#6 | (1)#6 | (1)#6 |
| | Manufacturer | Southwire | Southwire | Southwire | Southwire | Southwire | Southwire | Southwire | Southwire | Southwire | Southwire | Southwire | Southwire | Southwire | Southwire |
| P-05 & P-06 | Description | (3)#6 | (3)#6 | (3)#4 | (3)#3 | (3)#2 | (3)#1 | (3)#2/0 | (3)#8 | (3)#8 | (3)#6 | (3)#3 | (3)#2 | (3)#1/0 | (3)#2/0 |
| | Manufacturer | Southwire | Southwire | Southwire | Southwire | Southwire | Southwire | Southwire | Southwire | Southwire | Southwire | Southwire | Southwire | Southwire | Southwire |
| | Catalog # | N/A | N/A | N/A | N/A | N/A | N/A | N/A | N/A | N/A | N/A | N/A | N/A | N/A | N/A |
| | Length (Ft. Max) | N/A | N/A | N/A | N/A | N/A | N/A | N/A | N/A | N/A | N/A | N/A | N/A | N/A | N/A |
| | Cable Dia (in) | 0.254" | 0.254" | 0.324" | 0.352" | 0.384" | 0.446" | 0.532" | 0.216" | 0.216" | 0.254" | 0.352" | 0.384" | 0.486" | 0.532" |
| | Appleton Connector | (3) -CG-1850 | (3) -CG-1850 | (3) -CG-3150 | (3) -CG-3150 | (3) -CG-3150 | (3)-CG-3775 | (3) -CG-5075 | (3) -CG-1850 | (3) -CG-1850 | (3) -CG-1850 | (3) -CG-3150 | (3) -CG-3150 | (3) -CG-3775 | (3) -CG-5075 |
| | Connector Range | 0.187"-0.312" | 0.187"-0.312" | 0.312"-0.437" | 0.312"-0.437" | 0.312"-0.437" | 0.375"-0.500" | 0.500"-0.625" | 0.187"-0.312" | 0.187"-0.312" | 0.187"-0.312" | 0.312"-0.437" | 0.312"-0.437" | 0.375"-0.500" | 0.500"-0.625" |
| | Hub | (3) 1/2" - STA-1 | (3) 1/2" - STA-1 | (3) 1/2" - STA-1 | (3) 1/2" - STA-1 | (3) 1/2" - STA-1 | (3) 3/4" - STA-2 | (3) 3/4" - STA-2 | (3) 1/2" - STA-1 | (3) 1/2" - STA-1 | (3) 1/2" - STA-1 | (3) 1/2" - STA-1 | (3) 1/2" - STA-1 | (3) 3/4" - STA-2 | (3) 3/4" - STA-2 |
| P-07 & P-09 | Description | (5)#14 TC | (5)#14 TC | (5)#14 TC | (5)#14 TC | (5)#10 TC | (5)#10 TC | (4)#6 W/G, TC | (5)#14 TC | (5)#14 TC | (5)#14 TC | (5)#12 TC | (5)#10 TC | (4)#8 W/G, TC | (4)#6 W/G, TC |
| | Manufacturer | Houston Wire | Houston Wire | Houston Wire | Houston Wire | Houston Wire | Houston Wire | Houston Wire | Houston Wire | Houston Wire | Houston Wire | Houston Wire | Houston Wire | Houston Wire | Houston Wire |
| | Catalog # | HW151 01405 | HW151 01405 | HW151 01405 | HW151 01405 | HW151 01005 | HW151 01005 | HW 154 00604 | HW151 01405 | HW151 01405 | HW151 01405 | HW151 01205 | HW151 01005 | HW 154 00804 | HW 154 00604 |
| | Length (Ft. Max) | 19 FT | 19 FT | 19 FT | 19 FT | 19 FT | 19 FT | 19 FT | 19 FT | 19 FT | 19 FT | 19 FT | 19 FT | 19 FT | 19 FT |
| | Cable Dia (in) | 0.41" | 0.41" | 0.41" | 0.41" | 0.58" | 0.58" | 0.76" | 0.41" | 0.41" | 0.41" | 0.46" | 0.58" | 0.61" | 0.76" |
| | Appleton Connector | (2) -CG-3150 | (2) -CG-3150 | (2) -CG-3150 | (2) -CG-3150 | (2) -CG-5075 | (2) -CG-5075 | (2) - CG-7575 | (2) -CG-3150 | (2) -CG-3150 | (2) -CG-3150 | (2) -CG-3750 | (2) -CG-5075 | (2) -CG-5075 | (2) - CG-7575 |
| | Connector Range | 0.312"-0.437" | 0.312"-0.437" | 0.312"-0.437" | 0.312"-0.437" | 0.500"-0.625" | 0.500"-0.625" | 0.750"-0.875" | 0.312"-0.437" | 0.312"-0.437" | 0.312"-0.437" | 0.375"-0.500" | 0.500"-0.625" | 0.500"-0.625" | 0.750"-0.875" |
| | Hub | (2) 1/2" - STA-1 | (2) 1/2" - STA-1 | (2) 1/2" - STA-1 | (2) 1/2" - STA-1 | (2) 3/4" - STA-2 | (2) 3/4" - STA-2 | (2) 3/4" - STA-2 | (2) 1/2" - STA-1 | (2) 1/2" - STA-1 | (2) 1/2" - STA-1 | (2) 1/2" - STA-1 | (2) 3/4" - STA-2 | (2) 3/4" - STA-2 | (2) 3/4" - STA-2 |
| P-08 & P-10 | Description | (3)#14 | (3)#14 | (3)#14 | (3)#14 | (3)#10 | (3)#10 | (3)#6 | (3)#14 | (3)#14 | (3)#14 | (3)#12 | (3)#10 | (3)#8 | (3)#6 |
| | Manufacturer | Southwire | Southwire | Southwire | Southwire | Southwire | Southwire | Southwire | Southwire | Southwire | Southwire | Southwire | Southwire | Southwire | Southwire |

| REVISIONS | BY |
|---|---|
| | |
| | |
| | |
| | |

IMPROVEMENTS TO WASTEWATER COLLECTION SYSTEM

LIFT STATION CONSTRUCTION DETAILS

ELECTRICAL STANDARDS

EMERALD COAST UTILITIES AUTHORITY

APPROVED BY:

Drawn:
Designed:
Checked:
Date: 12/18/2014
Scale:
Project No:
Sheet No. 11
Of 18 Sheets

ALL WORK SHALL BE CONSTRUCTED IN ACCORDANCE WITH THE LATEST EDITION OF THE E.C.U.A. STANDARD SPECIFICATIONS

| Power & Control Conductors, CGB's and Hubs | | | | | | | | | | |
|---|---|---|---|---|---|---|---|---|---|---|
| Cable Number | Description | Manufacturer | Catalog Numer | Length (Ft. Max) | Cable Diameter | Appleton Liquidtight Cable Connector | Connector Cable Range | Crouse-Hinds Myers Hub | From Panel/Enclosure | To Panel/Enclosure |
| P-14 | (1) #8 AWG | N/A | N/A | AS REQ'D | N/A | N/A | N/A | N/A | Field | Power Panel |
| P-15 | 3-1/C #12 AWG | N/A | N/A | AS REQ'D | N/A | N/A | N/A | N/A | Power Panel | Power Panel |
| P-16 | 3-1/C #12 AWG | N/A | N/A | AS REQ'D | N/A | N/A | N/A | N/A | Power Panel | Power Panel |
| C-01 | (16) #14 AWG, Tray Cable | Houston Wire & Cable | HW 151 01416 | 24 FT | 0.68" | (2) - CG-6275 | 0.625"-0.750" | (2) 3/4" - STA-2 | Power Panel | Control Panel |
| C-02 | (5) #14 AWG, Tray Cable | Houston Wire & Cable | HW 151 01405 | 19 FT | 0.41" | (2) - CG-3750 | 0.375"-0.500" | (2) 1/2" - STA-1 | Power Panel | Pump 1 Panel |
| C-03 | (16) #14 AWG, Tray Cable | Houston Wire & Cable | HW 151 01416 | 22 FT | 0.68" | (2) - CG-6275 | 0.625"-0.750" | (2) 3/4" - STA-2 | Pump 2 Panel | Control Panel |
| C-04 | 1 Pair #16 SH, Tray Cable | Houston Wire & Cable | HW 120 01601 | 22 FT | 0.33" | (2) - CG-2575 | 0.250"-0.375" | (2) 3/4" - STA-2 | Pump 1 Panel | Control Panel |
| C-05 | 1 Pair #16 SH, Tray Cable | Houston Wire & Cable | HW 120 01601 | 22 FT | 0.33" | (2) - CG-2575 | 0.250"-0.375" | (2) 3/4" - STA-2 | Pump 2 Panel | Control Panel |
| PUMP 1-PWR | Per Mfg Specs | N/A | N/A | N/A | N/A | CG Series based on Mfg Specs | N/A | STA Series based on Mfg Specs | Field | Pump 1 Panel |
| PUMP 1-MTP | Per Mfg Specs | N/A | N/A | N/A | N/A | CG Series based on Mfg Specs | N/A | STA Series based on Mfg Specs | Field | Pump 1 Panel |
| PUMP 1-SF | Per Mfg Specs | N/A | N/A | N/A | N/A | CG Series based on Mfg Specs | N/A | STA Series based on Mfg Specs | Field | Pump 1 Panel |
| PUMP 2-PWR | Per Mfg Specs | N/A | N/A | N/A | N/A | CG Series based on Mfg Specs | N/A | STA Series based on Mfg Specs | Field | Pump 2 Panel |
| PUMP 2-MTP | Per Mfg Specs | N/A | N/A | N/A | N/A | CG Series based on Mfg Specs | N/A | STA Series based on Mfg Specs | Field | Pump 2 Panel |
| PUMP 2-SF | Per Mfg Specs | N/A | N/A | N/A | N/A | CG Series based on Mfg Specs | N/A | STA Series based on Mfg Specs | Field | Pump 2 Panel |
| Float Switch 1 | Float Switch Cable | BY OTHERS | N/A | N/A | 0.56" | (1) - CG-5050 | 0.500"-0.625" | (1) 1/2" - STA-1 | Field | Control Panel |
| Float Switch 2 | Float Switch Cable | BY OTHERS | N/A | N/A | 0.56" | (1) - CG-5050 | 0.500"-0.625" | (1) 1/2" - STA-1 | Field | Control Panel |
| Pressure Xducer | Pressure Transducer Cable | BY OTHERS | N/A | N/A | 0.35" | (1) - G-3150 | 0.312"-0.437" | (1) 1/2" - STA-1 | Field | Control Panel |
| Antenna COAX | Coaxial Cable | BY OTHERS | N/A | N/A | 0.408" | (1) - CG-3750 | 0.375"-0.500" | (1) 1/2" - STA-1 | Field | Control Panel |

## SERVICING CT & TESTING AMMETERS INSTRUCTIONS

**WARNING**

NEVER LEAVE THE CT CIRCUIT OPEN ALWAYS SHORT THE CIRCUIT. WHEN MAINTENANCE IS REQUIRED ENSURE TO FOLLOW THE INSTRUCTIONS BELOW. FAILURE TO DO SO MAY RESULT IN HIGH VOLTAGE SURGE THAT COULD INJURE PERSONAL AND DAMAGE EQUIPMENT.

**THE CALIBRATION & DISCONNECT PROCESS**

1. Loosen the screws on the SB-ME 2-8 and move the shorting bar from position A to B to short the outputs of the CT.
2. Secure the shorting bar by tightening the screws. The CT is now neutralized and the circuit is "safe" to open.
   2.1. For circuits that include an ME knife-disconnect terminal block, the knife disconnects can now be safely opened.
3. The test signal can now be injected into the transducer/meter side of the circuit by inserting the signal probes into the test adapters or connecting the signal to the disconnected wiring of the measurement circuit.

To return the unit to normal operation, perform the above steps in reverse order:

1. Disconnect the test signal/probes from the transducer wires or remove probes from the test plugs.
   1.1. For circuits that include the ME, the knife disconnect must now be CLOSED.
2. Open the switching bridge and return to normal operation.
3. Loosen the screws and move the shorting bar from position B to A and snap into place.
4. Tighten the screws to prevent movement and inadvertent shorting of the CT.

The CT measurement circuit is now functional

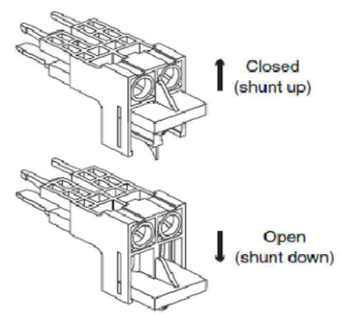


FIGURE 1: SB-ME 2-8 switching bridge

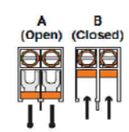


FIGURE 2: SB-ME 2-8 switching bridge

| REVISIONS | BY |
|---|---|
| | |
| | |
| | |
| | |

IMPROVEMENTS TO WASTEWATER COLLECTION SYSTEM

LIFT STATION CONSTRUCTION DETAILS

ELECTRICAL STANDARDS

EMERALD COAST UTILITIES AUTHORITY

APPROVED BY:

Drawn:
Designed:
Checked:
Date: 12/18/2014
Scale:
Project No:
Sheet No. 12
Of 18 Sheets

ALL WORK SHALL BE CONSTRUCTED IN ACCORDANCE WITH THE LATEST EDITION OF THE E.C.U.A. STANDARD SPECIFICATIONS

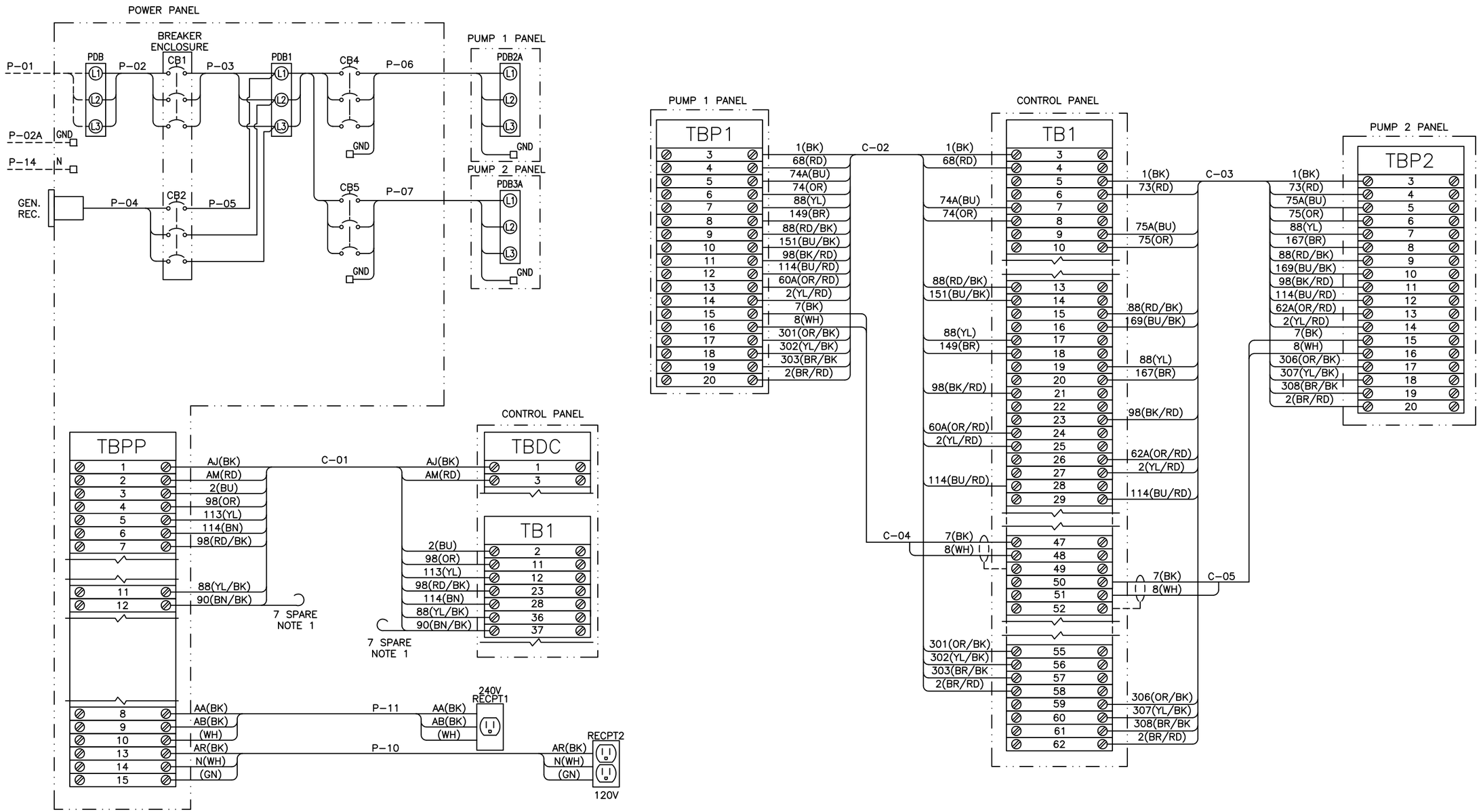


## NOTES:

1) ALL SPARE WIRE WILL BE CLEARLY LABELED WITH THE CABLE NUMBER & A SPARE DESIGNATION ON INDIVIDUAL WIRES. THESE SPARES WILL BE LONG ENOUGH TO REACH ANY POINT IN THE PANEL.
2) SPARE CONDUCTORS SHOULD BE TRIMMED AND HEAT SHRINK SHOULD BE USED TO SECURE THE SPARE CONDUCTORS IN THE CABLE.
3) THE INNER CONNECTING CONDUCTORS BETWEEN THE PANELS ARE CODED AS FOLLOWS: THE FIRST GROUP OF CHARACTER IS THE WIRE NUMBER AND THE SECOND GROUP IS THE COLOR (I.E. 1(BK) SIGNIFIES THAT THE WIRE NUMBER IS 1 AND THE COLOR IS BLACK). WIRE COLOR CODE AS FOLLOWS: BK-BLACK, RD-RED, BU-BLUE, OR-ORANGE, YL-YELLOW, BN-BROWN. FOR COLORS THAT ARE DENOTED AS XX/YY, XX IS THE BASE COLOR AND YY IS THE SPIRAL STRIPE (1.E. RD/BK IS A RED WIRE WITH A BLACK SPIRAL STRIPE).
4) SEE SHEETS 11 & 12 FOR PANEL TO PANEL INNER CONNECTING CONDUCTOR AND CABLE DETAILS.

| REVISIONS | BY |
|---|---|
| | |
| | |
| | |
| | |

IMPROVEMENTS TO WASTEWATER COLLECTION SYSTEM

# LIFT STATION CONSTRUCTION DETAILS

ELECTRICAL STANDARDS

EMERALD COAST UTILITIES AUTHORITY

APPROVED BY:

Drawn:
Designed:
Checked:
Date: 12/18/2014
Scale:
Project No:
Sheet No. 13
Of 18 Sheets

ALL WORK SHALL BE CONSTRUCTED IN ACCORDANCE WITH THE LATEST EDITION OF THE E.C.U.A. STANDARD SPECIFICATIONS

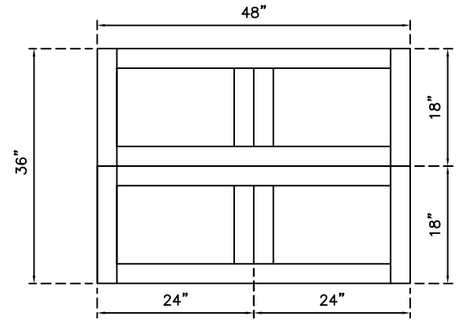


TOP VIEW

NOTES:

1. TOP AND BOTTOM OF BASE TO BE LEFT OPEN.
2. DRILL TOP OF BASE TO ATTACH ENCLOSURES AS REQUIRED.
3. DRILL BOTTOM OF BASE TO ATTACH TO SLAB AS REQUIRED.

## ATTENTION

THIS LAYOUT IS ONE OF TWO (2) POSSIBLE CHOICES – SEE SHEET 14 FOR THE OTHER OPTION. IF THIS LAYOUT OPTION IS SELECTED, SEE SHEET 7A FOR ASSOCIATED PANEL LAYOUT DETAILS.

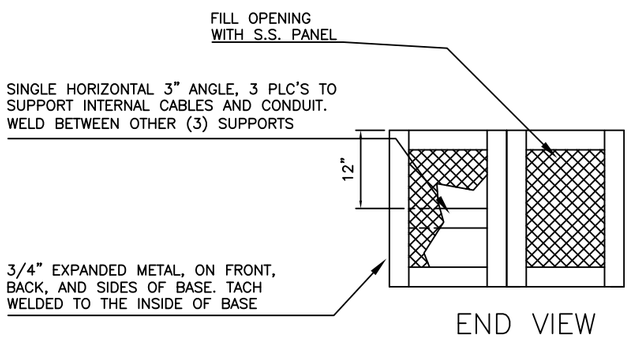


END VIEW

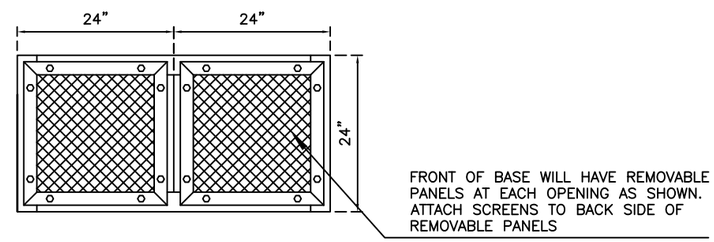


FRONT VIEW

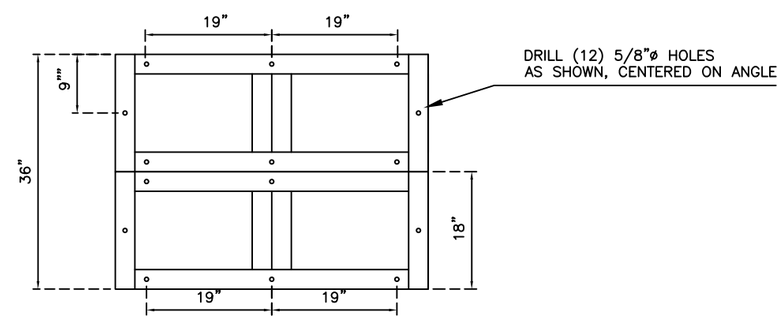


BOTTOM VIEW

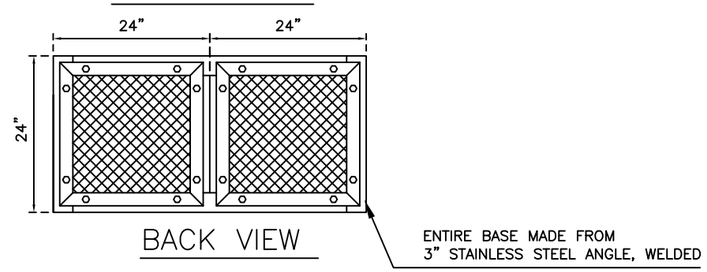


BACK VIEW

| REVISIONS | BY |
|---|---|
| | |
| | |
| | |
| | |

IMPROVEMENTS TO WASTEWATER COLLECTION SYSTEM

# LIFT STATION CONSTRUCTION DETAILS

ELECTRICAL STANDARDS

EMERALD COAST UTILITIES AUTHORITY

APPROVED BY:

Drawn:
Designed:
Checked:
Date: 12/18/2014
Scale:
Project No:
Sheet No. 14A
Of 18 Sheets

ALL WORK SHALL BE CONSTRUCTED IN ACCORDANCE WITH THE LATEST EDITION OF THE E.C.U.A. STANDARD SPECIFICATIONS

| Power Panel Fuse Schedule | | | | |
|---|---|---|---|---|
| Fuse | Type | Voltage | Amps | Description |
| F1 | KTK-R-1 | 600 | 1A | PM1 Phase Monitor A Phase |
| F2 | KTK-R-1 | 600 | 1A | PM1 Phase Monitor B Phase |
| F3 | KTK-R-1 | 600 | 1A | PM1 Phase Monitor C Phase |
| F6 | AGC-3 | 250 | 3A | Power Supply 1 Primary |
| F7 | AGC-3 | 250 | 3A | Power Supply 2 Primary |
| F38 | KTK-R-1 | 600 | 1A | PM2 Power Monitor A Phase |
| F39 | KTK-R-1 | 600 | 1A | PM2 Power Monitor B Phase |
| F40 | KTK-R-1 | 600 | 1A | PM2 Power Monitor C Phase |
| F41 | KTK-R-6/10 | 600 | .6A | Power Monitor |

| Pump 1 Panel Fuse Schedule | | | | |
|---|---|---|---|---|
| Fuse | Type | Voltage | Amps | Description |
| F4 | AGC-1 | 250 | 1A | Pump 1 Control Power |

| Pump 2 Panel Fuse Schedule | | | | |
|---|---|---|---|---|
| Fuse | Type | Voltage | Amps | Description |
| F5 | AGC-1 | 250 | 1A | Pump 2 Control Power |

| Control Panel Fuse Schedule | | | | |
|---|---|---|---|---|
| Fuse | Type | Voltage | Amps | Description |
| F8 | AGC-10 | 250 | 10A | Power Supply 1 Secondary |
| F9 | AGC-10 | 250 | 10A | Power Supply 2 Secondary |
| F10 | AGC-10 | 250 | 10A | Control Power |
| F11 | AGC-10 | 250 | 10A | Batteries |
| F12 | AGC-2 | 250 | 2A | Radio Power Supply Primary |
| F13 | AGC-2 | 250 | 2A | Radio Power Supply Secondary |
| F14 | AGC-1/4 | 250 | 1/4A | Pump 1 Motor Thermal |
| F15 | AGC-1/4 | 250 | 1/4A | Pump 2 Motor Thermal |
| F16 | AGC-1/10 | 250 | 1/10A | Operator Interface |
| F17 | AGC-1 | 250 | 1A | Digital Inputs 0.0-1.4 |
| F18 | AGC-1 | 250 | 1A | Digital Inputs 1.5-2.7 |
| F19 | AGC-2 | 250 | 2A | Digital Outputs 0.0-0.7 |
| F20 | AGC-2 | 250 | 2A | Digital Outputs 1.0-1.7 |
| F21 | AGC-1-1/2 | 250 | 1-1/2A | PLC Power |
| F22 | AGC-3/4 | 250 | 3/4A | Process Transmitter Supply |
| F23 | AGC-1/10 | 250 | 1/10A | Analog Inputs |
| F24 | AGC-1/10 | 250 | 1/10A | Analog Outputs |
| F25 | GMA-1/4 | 250 | 1/4A | Analog Input 2 |
| F26 | GMA-1/4 | 250 | 1/4A | Analog Input 3 |
| F27 | GMA-1/4 | 250 | 1/4A | Analog Input 4 |

| HMI BUTTON LEGEND | |
|---|---|
| F1 | FAULT RESET/ENABLE INTRUSION |
| SHIFT+F1 | DISABLE INTRUSION |
| F2 | ALTERNATE PUMP ASSIGNMENTS |
| F3 | RESET PUMP 1 RUNTIME |
| SHIFT+F3 | RESET PUMP 2 RUNTIME |
| F4 | ALARMS SCREEN |
| F5 | OVERVIEW SCREEN |
| F6 | PUMP 1 SCREEN |
| F7 | PUMP 2 SCREEN |
| F8 | SETPOINTS SCREEN |

CONTROL PANEL ISR INFORMATION TAGS

THIS AREA IN BLUE IS FOR INTRINSICALLY SAFE CIRCUITS AND DEVICES ONLY. THIS AREA INCLUDES THE AIR SPACE DIRECTLY IN FRONT OF THE BLUE AREA BETWEEN THE BACKPANEL AND THE ENCLOSURE WALLS AND DOOR INCLUDING THE BOTTOM OF THE ENCLOSURE. ONLY INTRINSICALLY SAFE DEVICES AND WIRING ARE ALLOWED IN THIS AREA. DO NOT ROUTE NON–INTRINSICALLY SAFE WIRING THROUGH THIS AREA OF ENCLOSURE.

WARNING

SUBSTITUTION OF COMPONENTS MAY IMPAIR INTRINSIC SAFETY

CONTROL PANEL EXTERIOR TAG INFORMATION

WARNING

TO PREVENT IGNITION OF FLAMMABLE OR COMBUSTIBLE ATMOSPHERES DISCONNECT POWER BEFORE SERVICING

PROVIDES INTRINSICALLY SAFE CIRCUIT EXTENSIONS FOR USE IN CLASS 1, GROUPS A, B, C, AND D WHEN CONNECTED PER REFERENCE DRAWINGS ON MAIN NAMEPLATE LABEL

CONTROL PANEL DEADFRONT TAG INFORMATION

SECURELY FASTEN ALL INNER DOOR LATCHES BEFORE CLOSING OUTER DOOR. FAILURE TO FOLLOW THESE INSTRUCTIONS COULD CAUSE THE OUTER DOOR TO JAM WHEN RE–OPENED

| 240V Nameplate Data | | | | | | | |
|---|---|---|---|---|---|---|---|
| Total Load (FLA) | 46 | 51 | 57 | 68 | 82 | 94 | 122 |
| Motor Hp | 1 | 2 | 9.6 | 15.2 | 22 | 28 | 42 |
| Motor FLA | 4.2 | 6.8 | 4.8 | 7.6 | 11 | 14 | 21 |

| 208V Nameplate Data | | | | | | | |
|---|---|---|---|---|---|---|---|
| Total Load (FLA) | 31 | 37 | 44 | 57 | 72 | 86 | 118 |
| Motor Hp | 1 | 2 | 3 | 5 | 7.5 | 10 | 15 |
| Motor FLA | 4.8 | 7.8 | 11 | 17.5 | 25.3 | 32.2 | 48.3 |

| Torque Rating Table | | | | | | | | | | | | | | |
|---|---|---|---|---|---|---|---|---|---|---|---|---|---|---|
| | 240V Supply | | | | | | | 208V Supply | | | | | | |
| | Horsepower | | | | | | | Horsepower | | | | | | |
| Component | 1 | 2 | 3 | 5 | 7.5 | 10 | 15 | 1 | 2 | 3 | 5 | 7.5 | 10 | 15 |
| Incoming Distribution Block (PDB1) | 120lb-in/13.5N-m | 120lb-in/13.5N-m | 120lb-in/13.5N-m | 120lb-in/13.5N-m | 120lb-in/13.5N-m | 120lb-in/13.5N-m | 275lb-in/31.0N-m | 40lb-in/4.5N-m | 40lb-in/4.5N-m | 120lb-in/13.5N-m | 120lb-in/13.5N-m | 120lb-in/13.5N-m | 275lb-in/31.0N-m | 275lb-in/31.0N-m |
| Incoming Neutral Block | 40lb-in/4.5N-m | 40lb-in/4.5N-m | 40lb-in/4.5N-m | 40lb-in/4.5N-m | 40lb-in/4.5N-m | 40lb-in/4.5N-m | 40lb-in/4.5N-m | 40lb-in/4.5N-m | 40lb-in/4.5N-m | 40lb-in/4.5N-m | 40lb-in/4.5N-m | 40lb-in/4.5N-m | 40lb-in/4.5N-m | 40lb-in/4.5N-m |
| Main Ground Block | 20lb-in/2.2N-m | 20lb-in/2.2N-m | 20lb-in/2.2N-m | 25lb-in/2.8N-m | 35lb-in/4.0N-m | 35lb-in/4.0N-m | 35lb-in/4.0N-m | 20lb-in/2.2N-m | 20lb-in/2.2N-m | 20lb-in/2.2N-m | 25lb-in/2.8N-m | 35lb-in/4.0N-m | 35lb-in/4.0N-m | 35lb-in/4.0N-m |
| Motor Distribution Block (PDB2 & 3) | 35lb-in/4.0N-m | 35lb-in/4.0N-m | 35lb-in/4.0N-m | 35lb-in/4.0N-m | 35lb-in/4.0N-m | 35lb-in/4.0N-m | 120lb-in/13.5N-m | 35lb-in/4.0N-m | 35lb-in/4.0N-m | 35lb-in/4.0N-m | 35lb-in/4.0N-m | 35lb-in/4.0N-m | 40lb-in/4.5N-m | 120lb-in/13.5N-m |
| Motor Ground Block | 20lb-in/2.2N-m | 20lb-in/2.2N-m | 20lb-in/2.2N-m | 20lb-in/2.2N-m | 20lb-in/2.2N-m | 20lb-in/2.2N-m | 35lb-in/4.0N-m | 20lb-in/2.2N-m | 20lb-in/2.2N-m | 20lb-in/2.2N-m | 20lb-in/2.2N-m | 20lb-in/2.2N-m | 35lb-in/4.0N-m | 35lb-in/4.0N-m |

| REVISIONS | BY |
|---|---|
| | |
| | |
| | |
| | |

IMPROVEMENTS TO WASTEWATER COLLECTION SYSTEM

LIFT STATION CONSTRUCTION DETAILS

ELECTRICAL STANDARDS

EMERALD COAST UTILITIES AUTHORITY

APPROVED BY:

Drawn:
Designed:
Checked:
Date: 12/18/2014
Scale:
Project No:
Sheet No. 15
Of 18 Sheets

ALL WORK SHALL BE CONSTRUCTED IN ACCORDANCE WITH THE LATEST EDITION OF THE E.C.U.A. STANDARD SPECIFICATIONS

PHOENIX CONTACT
PHOENIX CONTACT GmbH & Co. KG
Flachsmarktstraße 8, 32825 Blomberg, Germany
Fax +49-(0)5235-341200, Phone +49-(0)5235-300
www.phoenixcontact.com

MNR 9040234 / 2010-11-03

# CONTROL / INSTALLATION DRAWING
## MACX MCR-EX Series

**Doc.-No.: 83104549-04**

| Art.Nr. | Model Number |
|---|---|
| 2865476 | MACX MCR-EX-SL-2NAM-RO |
| ~~2924087~~ | ~~MACX MCR-EX-SL-2NAM-RO-SP~~ |

WARNING – EXPLOSION HAZARD – Substitution of components may impair suitable for Class I, Division 2.

WARNING – EXPLOSION HAZARD – Do not disconnected equipment unless power has been removed or the area is known to be non-hazardous.

WARNING – Exposure to some chemicals may degrade the sealing properties of materials used in the sealed relays.

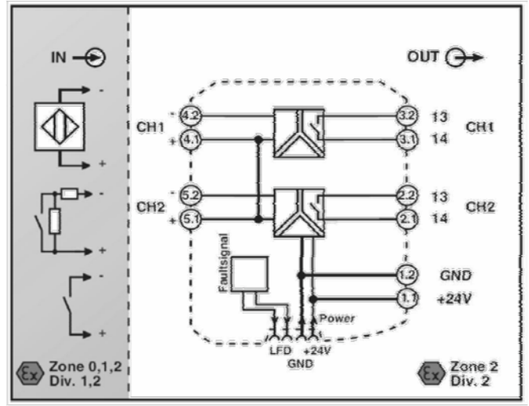


**HAZARDOUS AREA**
Class I, Division 1, Groups A,B,C,D
Class II, Division 1, Groups E,F,G
Class III, Division 1
Class I, Zone 0,1,2, Groups IIC,IIB,IIA

**NON HAZARDOUS AREA**
or Class I, Division 2, Groups A,B,C,D
or Class I, Zone 2, Groups IIC,IIB,IIA

I. The Entity Concept allows interconnection of intrinsically safe apparatus with associated apparatus not specifically examined in combination as a system. Selected Intrinsically Safe Equipment must be third party listed as intrinsically safe for the application and have intrinsically safe entity parameters conforming with table 1 below:

Tabelle1:

| I.S. Equipment | | Associated Apparatus |
|---|---|---|
| V max (or Ui) | ≥ | Voc or Vt (or Uo) |
| I max (or Ii) | ≥ | Isc or It (or Io) |
| P max (or Pi) | ≥ | Po |
| Ci + Ccable | ≤ | Ca (or Co) |
| Li + Lcable | ≤ | La (or Lo) |

II. Capacitance and inductance of the field wiring from the intrinsically safe equipment to the associated apparatus shall be calculated and must be included in the system calculations as shown under **I.** Where the cable capacitance and inductance per foot are not known, the following values shall be used: Ccable = 60 pF / ft., Lcable = 0.2 µH / ft.

III. The output current of this associated apparatus is limited by a resistor such that the output voltage-current plot is a straight line drawn between open-circuit voltage and short-circuit current.

IV. This associated apparatus has not been evaluated for use in combination with another associated apparatus.

V. This associated apparatus may also be connected to simple apparatus as defined in Article 504.2 and installed and temperature classified in accordance with Article 504.10(B) of the National Electrical Code (ANSI/NFPA70), or other local codes applicable.

VI. Associated apparatus must be installed in an enclosure (which meets the requirements of ANSI/ISA S82) suitable for the application in accordance with the National Electrical Code (ANSI/NFPA 70) for installation in the United States, the Canadian Electrical Code for installation in Canada, or other local codes, as applicable.

VII. When using as non-incendive device for Class I, Division 2 or Class I, Zone 2 do not snap equipment onto or off the T-connector, or connect and disconnect non-intrinsically safe-lines unless power has been removed or the area is known to be non hazardous.

VIII. Intrinsically safe circuits must be wired separately in according with Article 504.20 of the National Electrical Code (ANSI/NFPA 70) for installation in the United States, the Canadian Electrical Code Part 1, Appendix F for installation in Canada, or other local codes, as applicable.

IX. When multiple circuits extend from the same piece of associated apparatus, they must be installed in separate cables or in one cable having suitable insulation. Refer to Article 504.30(B) of the National Electrical Code (ANSI/NFPA 70) and Instrument Society of America Recommended Practice ISA RP12.6 for installing intrinsically safe equipment.

X. When using as non-incendive device for Class I, Division 2 or Class I, Zone 2 with exposure to some chemicals a periodically inspect of the relays for any degradation of properties and a replacement if degradation is found is recommended.

| | | output circuit - hazardous zone | | | | | | Group A, B or IIC | | Group C or IIB | | Group D or IIA | | input circuit - hazardous zone | | | | |
|---|---|---|---|---|---|---|---|---|---|---|---|---|---|---|---|---|---|---|
| Art.Nr. | Model Number | Terminal | Voc or Uo / Vdc | Isc or Io / mA | Po / mW | Ci / nF | Li / mH | Ca or Co / nF | La or Lo / mH | Ca or Co / nF | La or Lo / mH | Ca or Co / nF | La or Lo / mH | Terminal | Vmax or Ui / V | Imax or Ii / mA | Ci / nF | Li / mH |
| 2865476 | MACX MCR-EX-SL-2NAM-RO | 4.1-4.2<br>5.1.5.2 | 9,6 | 10 | 25 | 1,1 | negligible | 510<br>840<br>1200<br>3600 | 100<br>5<br>1<br>0,01 | 2700<br>4400<br>6300<br>26000 | 100<br>5<br>1<br>0,01 | - | - | - | - | - | - | - |
| ~~2924087~~ | ~~MACX MCR-EX-SL-2NAM-RO-SP~~ | ~~4.1-4.2<br>5.1.5.2~~ | ~~9,6~~ | ~~10~~ | ~~25~~ | ~~1,1~~ | ~~negligible~~ | ~~510<br>840<br>1200<br>3600~~ | ~~100<br>5<br>1<br>0,01~~ | ~~2700<br>4400<br>6300<br>26000~~ | ~~100<br>5<br>1<br>0,01~~ | ~~-~~ | ~~-~~ | ~~-~~ | ~~-~~ | ~~-~~ | ~~-~~ | ~~-~~ |

| | | power supply circuit | | | | Max. Surrounding Air Temperature Rating: 60°C | signal circuit - safe zone | | | interface circuit |
|---|---|---|---|---|---|---|---|---|---|---|
| Art.Nr. | Model Number | Terminal | T-Connector | Un = 24 V - 20% +25% U range | Um | Ambient Temperature Range: Tamb | Terminal | output | input | socket |
| 2865476 | MACX MCR-EX-SL-2NAM-RO | 1.1-1.2 | yes | 19,2 ... 30 V DC | 253 V AC / 125 V DC | -20...+60°C | 3.1-3.2 + 2.1-2.2 | X | - | - |
| ~~2924087~~ | ~~MACX MCR-EX-SL-2NAM-RO-SP~~ | ~~1.1-1.2~~ | ~~yes~~ | ~~19,2 ... 30 V DC~~ | ~~253 V AC / 125 V DC~~ | ~~-20...+60°C~~ | ~~3.1-3.2 + 2.1-2.2~~ | ~~X~~ | ~~-~~ | ~~-~~ |

© PHOENIX CONTACT 2010



| REVISIONS | BY |
|---|---|
| | |
| | |
| | |
| | |

IMPROVEMENTS TO WASTEWATER COLLECTION SYSTEM
LIFT STATION CONSTRUCTION DETAILS
ELECTRICAL STANDARDS

EMERALD COAST UTILITIES AUTHORITY

APPROVED BY:

Drawn:
Designed:
Checked:
Date: 12/18/2014
Scale:
Project No:
Sheet No. 16
Of 18 Sheets

# GENERAL ELECTRICAL NOTES

NEW WORK:

1. ENTIRE ELECTRICAL INSTALLATION SHALL BE IN ACCORDANCE WITH THE LATEST EDITION (UNLESS NOTED OTHERWISE) OF THE FOLLOWING CODES AND STANDARDS:
   1.1. NATIONAL ELECTRICAL CODE (NFPA 70).
   1.2. STANDARD FOR FIRE PROTECTION IN WASTEWATER TREATMENT AND COLLECTION FACILITIES (NFPA 820).
2. THE CONTRACTOR SHALL BE RESPONSIBLE FOR READING ALL PROJECT SPECIFICATIONS AND WILL BE RESPONSIBLE FOR MEETING ALL REQUIREMENTS OUTLINED IN THE SPECIFICATIONS.
3. CONTRACTOR SHALL COORDINATE ALL WORK WITH OTHER TRADES PRIOR TO ROUGH-IN AND INSTALLATION.
4. WORKING SPACE FOR ALL ELECTRICAL AND CONTROL EQUIPMENT OPERATING AT 600V VOLTS OR LESS TO GROUND AND LIKELY TO REQUIRE EXAMINATION, ADJUSTMENT, SERVICING, OR MAINTENANCE WHILE ENERGIZED SHALL COMPLY WITH NEC, ARTICLE 110.26.
5. THE ELECTRICAL DESIGN PROVIDES A NUMBER OF BRANCH CIRCUITS, AMPACITY AND OVERCURRENT PROTECTION FOR OTHER DIVISIONS DESIGN BASIS EQUIPMENT CONFORMING TO MANUFACTURER'S SPECIFICATIONS AVAILABLE AT TIME OF DESIGN. THE CONTRACTOR SHALL VERIFY ALL EQUIPMENT LOADS PRIOR TO ROUGH-IN. IF REQUIREMENTS OF EQUIPMENT ACTUALLY PROVIDED UNDER CONTRACT FOR CONSTRUCTION ARE DIFFERENT, CONTRACTOR SHALL MAKE ALL CHANGES NECESSARY WITHOUT INCREASE IN THE CONTRACT AMOUNT. SUCH CHANGES SHALL BE BASED UPON REQUIREMENTS, NAMEPLATE VALUES AND CODE REQUIREMENTS, WHICHEVER IS MORE STRINGENT, AND MAY INCLUDE, BUT ARE NOT LIMITED TO: SIZE OF CONDUCTORS, SIZE OF CONDUIT, QUANTITY OF CONDUCTORS AND CONDUITS, TYPE AND SIZE OF CIRCUIT BREAKER OR DISCONNECT, OVERLOADS, FULL-VOLTAGE STARTERS, REDUCED VOLTAGE SOFT STARTERS, VARIABLE FREQUENCY DRIVES, AND FUSE PROTECTION.
6. THE ELECTRICAL CONTRACTOR IS REQUIRED TO COORDINATE, PROVIDE, AND INSTALL A FULLY OPERATIONAL AND CODE COMPLIANT ELECTRICAL SYSTEM. THIS MAY INCLUDE THE ADDITION OF ELECTRICAL ITEMS NOT SHOWN ON THE ELECTRICAL PLANS, BUT REQUIRED FOR SYSTEM OPERATION.
7. CONTRACTOR SHALL COORDINATE INSTALLATION OF ELECTRICAL SERVICE WITH ELECTRICAL UTILITY COMPANY PROVIDING ELECTRICAL SERVICE TO FACILITY. CONTRACTOR SHALL PAY ALL FEES ASSESSED BY ELECTRICAL UTILITY COMPANY TO PROVIDE ELECTRICAL SERVICE TO FACILITY.
8. CONTRACTOR SHALL EXCAVATE AND CONDUCT DEMOLITION SO AS TO AVOID DAMAGE TO EXISTING UTILITIES AND OTHER UNDERGROUND OR CONCEALED ITEMS. IF EXISTING OR NEW ITEMS ARE DAMAGED, THE CONTRACTOR SHALL NOTIFY THE OWNER AT ONCE OF ALL DAMAGE AND SHALL REPAIR (OR REPLACE IF NECESSARY) TO THE ORIGINAL CONDITION TO THE SATISFACTION OF OWNER AND ENGINEER AT NO CHARGE IN THE CONTRACT AMOUNT.
9. THE CONTRACTOR SHALL BE RESPONSIBLE FOR PROVIDING DETAILED ELECTRICAL AND CONTROL EQUIPMENT LAYOUT DRAWINGS TO THE ENGINEER AND OWNER FOR APPROVAL PRIOR TO INSTALLATION.
10. ALL CONDUITS NOT LOCATED UNDER SLAB SHALL HAVE A MINIMUM BURIAL DEPTH OF 42", UNLESS NOTED OTHERWISE.
11. CONDUITS SHALL BE BURIED 42" (MINIMUM) BELOW GRADE WITH MARKER TAPE 6" ABOVE TOP OF CONDUIT, UNLESS NOTED OTHERWISE.
12. MINIMUM SIZE CONDUIT SHALL BE 1" (UNLESS NOTED OTHERWISE).
13. CONDUIT ROUTINGS AND DEVICE/EQUIPMENT LOCATIONS SHOWN ARE DIAGRAMMATIC ONLY. CONTRACTOR SHALL FIELD ROUTE AND LOCATE AS REQUIRED.
14. CONTRACTOR SHALL PROVIDE PULL BOXES IN POWER CIRCUIT CONDUIT AS REQUIRED TO LIMIT THE NUMBER OF BENDS TO A MAXIMUM OF 270° OR THREE 90° BENDS.
15. ALL WIRE SHALL BE COPPER.
16. ALL ELECTRICAL CIRCUITS SHALL INCLUDE A GREEN GROUNDING CONDUCTOR SIZED PER NEC.
17. CONDUCTORS SHALL BE TERMINATED ON TERMINAL BLOCKS.
18. THE CONTRACTOR SHALL TAG ALL POWER AND CONTROL SYSTEM CABLING AT ALL TERMINATION POINTS.
19. FINAL CONNECTION TO ALL EQUIPMENT IS SHOWN DIAGRAMMATIC. PROVIDE FINAL CONNECTION AS REQUIRED PER MANUFACTURER OF EQUIPMENT.
20. CONTRACTOR SHALL MAINTAIN A SET OF PRINTS AND MARK-UP DURING CONSTRUCTION TO REFLECT "AS-BUILT" CONDITIONS. PRINTS SHALL BE DELIVERED TO THE ENGINEER UPON COMPLETION OF THE PROJECT.
21. ALL HARDWARE SHALL BE STAINLESS STEEL.
22. ALUMINUM CONDUIT SHALL BE COATED WITH (2) WRAPS OF ANTI-CORROSION TAPE OR RUN THROUGH A SCHEDULE 80 PVC SLEEVE TO WHEN IN CONTACT WITH CONCRETE.
23. BARE COPPER SHALL BE COATED WITH (2) WRAPS OF ANTI-CORROSION TAPE OR RUN THROUGH A SCHEDULE 80 PVC SLEEVE TO WHEN IN CONTACT WITH CONCRETE.
24. ENGINEER OF RECORD SHALL BE RESPONSIBLE FOR FINAL SIZING OF ALL EQUIPMENT.

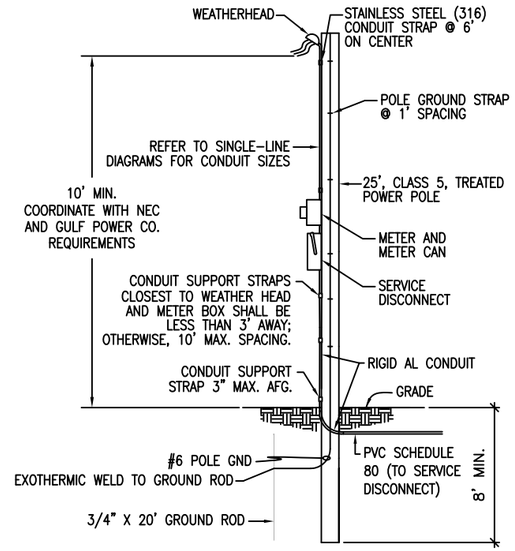


SERVICE LATERAL CONDUIT SHALL BE 3" (MIN) SCHEDULE 80 PVC BELOW GRADE AND 3" (MIN) RIGID AL CONDUIT ABOVE GRADE. ANY REQUIREMENTS BY THE UTILITY COMPANY SHALL PREVAIL OVER THE REQUIREMENTS OUTLINED HERE AND SHALL BE COORDINATED BY THE ELECTRICAL CONTRACTOR PRIOR TO INSTALLATION.

A3 UTILITY POLE DETAIL
NOT TO SCALE

ALL WORK SHALL BE CONSTRUCTED IN ACCORDANCE WITH THE LATEST EDITION OF THE E.C.U.A. STANDARD SPECIFICATIONS

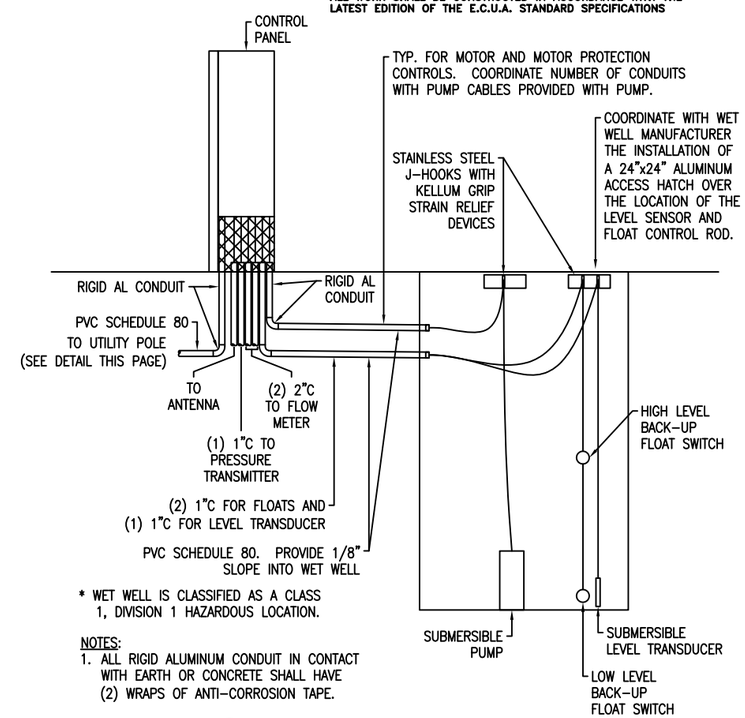


* WET WELL IS CLASSIFIED AS A CLASS 1, DIVISION 1 HAZARDOUS LOCATION.

NOTES:
1. ALL RIGID ALUMINUM CONDUIT IN CONTACT WITH EARTH OR CONCRETE SHALL HAVE (2) WRAPS OF ANTI-CORROSION TAPE.

B4 TYPICAL WET WELL SECTION DETAIL
NOT TO SCALE

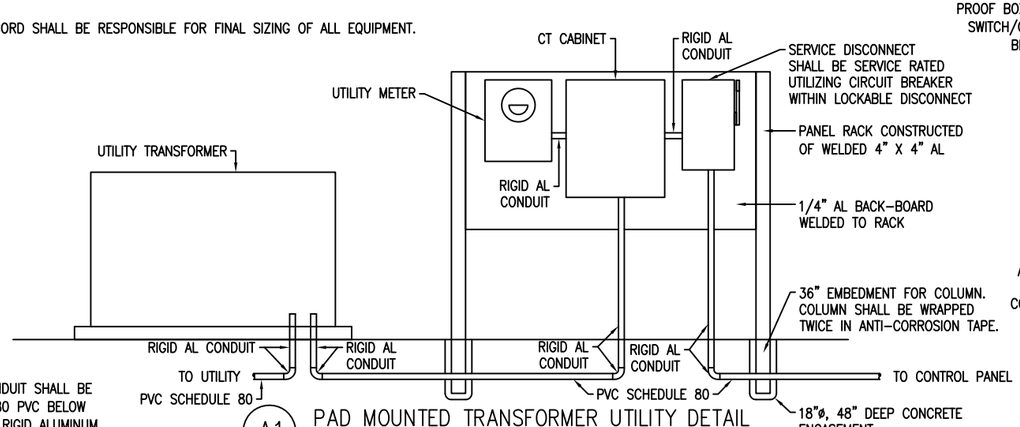


* SERVICE LATERAL CONDUIT SHALL BE 3" (MIN) SCHEDULE 80 PVC BELOW GRADE AND 3" (MIN) RIGID ALUMINUM CONDUIT ABOVE GRADE.

A1 PAD MOUNTED TRANSFORMER UTILITY DETAIL
NOT TO SCALE

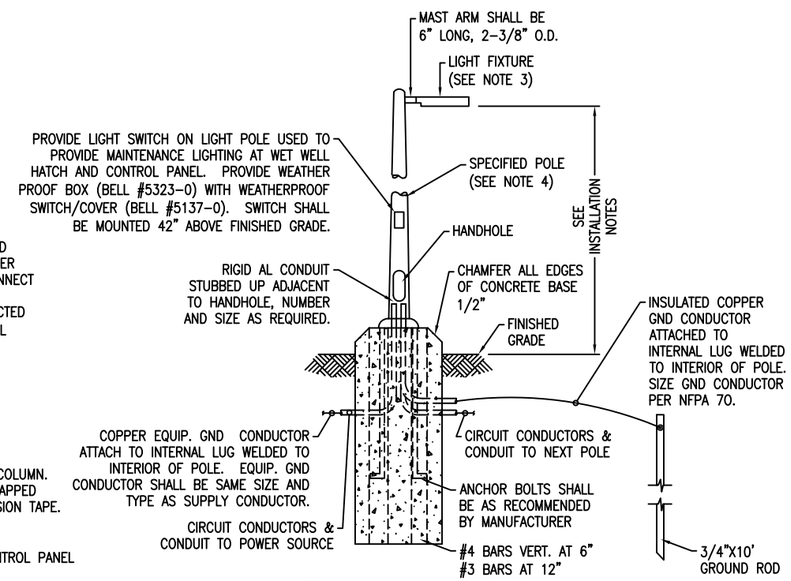


A4 LIGHT POLE INSTALLATION DETAIL
NOT TO SCALE

LIGHTING PERFORMANCE CRITERIA:
1. LIGHTING FIXTURE LAYOUT SHALL BE BASED UPON ACHIEVING 20 FOOT CANDLES (+/- 20%) AT THE FRONT OF THE CONTROL PANEL (WORK-PLANE OF 24" AFG) AND AT THE WET WELL ACCESS HATCH (WORKPLANE OF 0" AFG).
2. GENERAL SECURITY LIGHTING SHALL ENCOMPASS ACCESS GATE AND ALL PIPING/EQUIPMENT AT A MIN: AVERAGE 1 FOOT-CANDLE (+/- 20%, AT WORKPLANE OF 0" AFG).
3. REFER TO LIGHTING CONTROL DIAGRAM ON SHEET No. 18 FOR ADDITIONAL REQUIREMENTS.

LIGHT POLE INSTALLATION NOTES:
1. BURIAL AND DIAMETER DIMENSIONS INDICATED ARE FOR NOMINAL MINIMAL SIZES ONLY. FINAL DIMENSIONS SHALL BE DETERMINED BY A REGISTERED STRUCTURAL ENGINEER IN THE STATE OF FLORIDA. BASED UPON FIXTURES PROVIDED. PROVIDE SIGNED, DATED, AND SEALED PLANS FOR EACH INSTALLATION TYPE AND FIXTURE TYPE AS PART OF LIGHTING SUBMITTAL PACKAGE.
2. THE POLE AND FOUNDATION DESIGN SHALL BE BY A DELEGATED PROFESSIONAL ENGINEER TO MEET THE FOLLOWING CRITERIA:
   2.1. DESIGN WIND SPEED 160 MPH WITH A 1.3 GUST FACTOR. EXPOSURE CATEGORY C.
   2.2. SIZE EMBEDMENT FOR A MAXIMUM PERMANENT POLE DEFLECTION AFTER DESIGN WIND SPEED EVENT OF 1.00°.
   2.3. ALUMINUM, ROUND OR SQUARE, TAPERED.
3. FIXTURE SHALL BE AMERICAN ELECTRIC LIGHTING ATB2 FIXTURE, 40 LED, 1000mA DRIVER, 120V, TYPE 4, WITH PHOTOCONTROL.
4. REFER TO SPECIFICATIONS SECTION 16521 "EXTERIOR LIGHTING" FOR ADDITIONAL REQUIREMENTS.
5. LIGHT FIXTURES SHALL BE MOUNTED AT 15'-0" (MAXIMUM) ABOVE FINISHED GRADE.

| REVISIONS | BY |
|---|---|
| | |
| | |
| | |
| | |

IMPROVEMENTS TO WASTEWATER COLLECTION SYSTEM
LIFT STATION CONSTRUCTION DETAILS
ELECTRICAL STANDARDS

EMERALD COAST UTILITIES AUTHORITY

APPROVED BY:

Drawn:
Designed:
Checked:
Date: 12/18/2014
Scale:
Project No:
Sheet No. 17
Of 18 Sheets

ALL WORK SHALL BE CONSTRUCTED IN ACCORDANCE WITH THE LATEST EDITION OF THE E.C.U.A. STANDARD SPECIFICATIONS

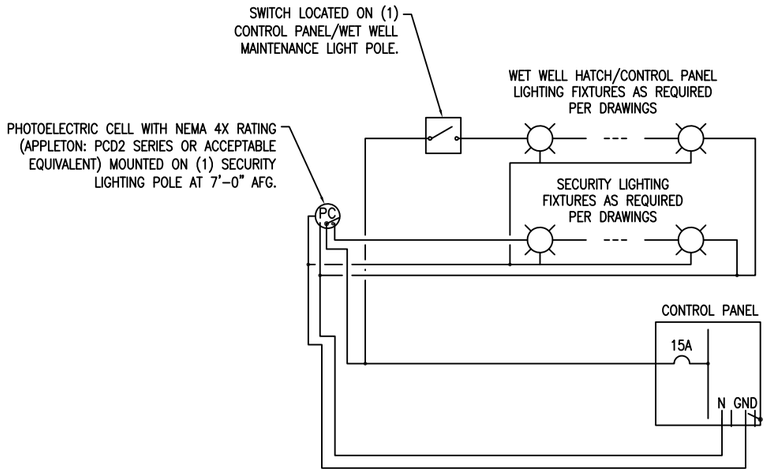


C2 TYPICAL LIGHTING CONTROL DIAGRAM

NOT TO SCALE

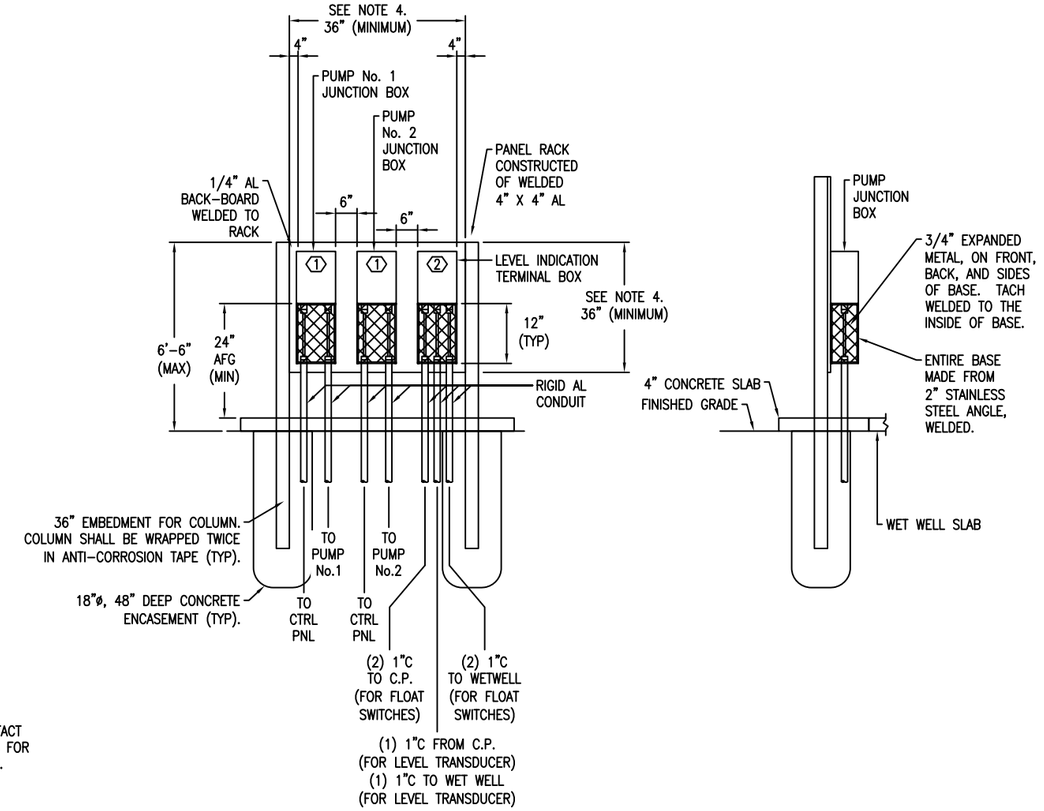


FRONT ELEVATION

SIDE ELEVATION

DETAIL NOTES:

1. THIS DETAIL SHALL ONLY APPLY WHEN THE CONTROL PANEL CANNOT BE PLACED WITHIN 10'-0" OF THE WET WELL TO ALLOW FOR CONNECTION OF STANDARD 50 FOOT PUMP CABLE CONNECTIONS.
2. BACKBOARD SHALL BE PLACED AT THE EDGE OF THE WET WELL SLAB BETWEEN THE WET WELL AND CONTROL PANEL.
3. JUNCTION BOXES SHALL BE MOUNTED SUCH THAT THEY ARE FACING THE WET WELL.
4. ENGINEER/CONTRACTOR SHALL SIZE JUNCTION BOXES AND BACKBOARDS BASED UPON INSTALLATION REQUIREMENTS PROVIDED AT TIME OF DESIGN.

KEY NOTES

1 REFER TO "TYPICAL PUMP JUNCTION BOX ELEVATION" (THIS SHEET) FOR ADDITIONAL REQUIREMENTS.

2 REFER TO "TYPICAL LEVEL INDICATION JUNCTION BOX ELEVATION" (THIS SHEET) FOR ADDITIONAL REQUIREMENTS.

A4 TYPICAL PUMP JUNCTION BOXES

NOT TO SCALE

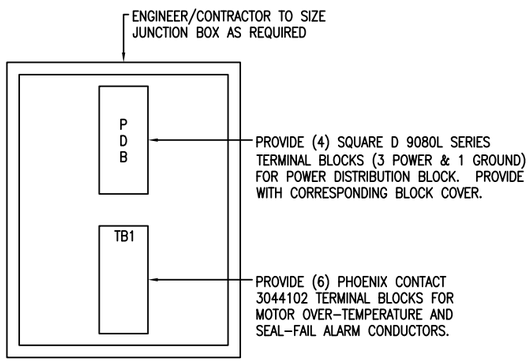


INTERIOR ELEVATION

DETAIL NOTES:

1. ALL TERMINAL BLOCKS SHALL BE PROVIDED WITH CORRESPONDING END BRACKETS AND END COVERS.
2. PROVIDE SEPARATE GROUND LUG IN EACH JUNCTION BOX, BONDED TO JUNCTION BOX.

A1 TYPICAL PUMP JUNCTION BOX ELEVATION

NOT TO SCALE

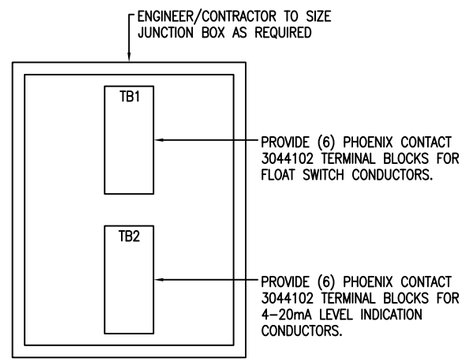


INTERIOR ELEVATION

DETAIL NOTES:

1. ALL TERMINAL BLOCKS SHALL BE PROVIDED WITH CORRESPONDING END BRACKETS AND END COVERS.
2. PROVIDE SEPARATE GROUND LUG IN EACH JUNCTION BOX, BONDED TO JUNCTION BOX.

A3 TYPICAL LEVEL INDICATION JUNCTION BOX ELEVATION

NOT TO SCALE

| REVISIONS | BY |
|---|---|
| | |
| | |
| | |
| | |

IMPROVEMENTS TO WASTEWATER COLLECTION SYSTEM

LIFT STATION CONSTRUCTION DETAILS

ELECTRICAL STANDARDS

EMERALD COAST UTILITIES AUTHORITY

APPROVED BY:

Drawn:
Designed:
Checked:
Date: 12/18/2014
Scale:
Project No:
Sheet No. 18
Of 18 Sheets