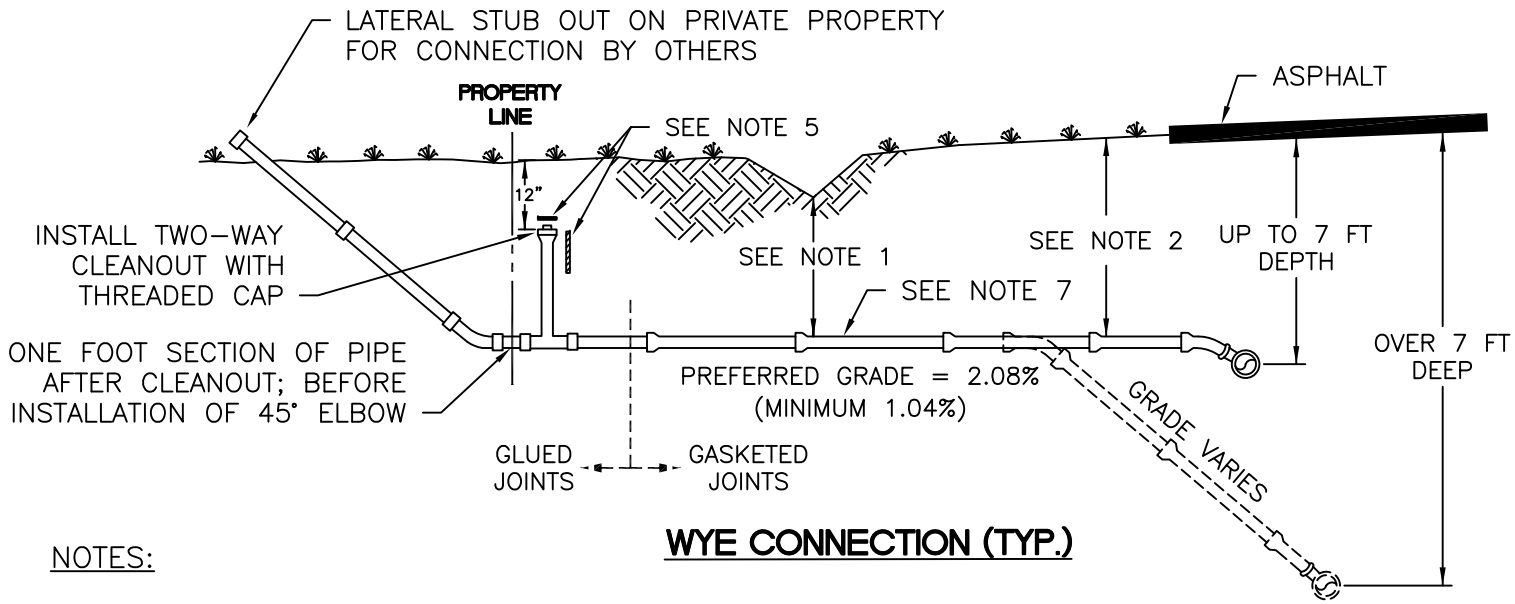


## WYE CONNECTION (TYP.)

NOTES:

1. MAINTAIN 18" MINIMUM IF DITCH IS PRESENT.
2. MAINTAIN 36" MINIMUM IF NO DITCH IS PRESENT.
3. ALL LATERALS TO BE 4" ø UNLESS PLANS SHOW LARGER DIAMETER.
4. SEWER LATERAL SHALL BE INSTALLED FOR EACH LOT UNLESS OTHERWISE INDICATED ON CONSTRUCTION PLANS.
5. INSTALL #4 REBAR, 12" LONG, 12" COVER, NEXT TO CLEANOUT. PLACE TEMPO UNIMARKER MODEL 172 DISC DIRECTLY ABOVE CLEANOUT CAP.
6. PLUMBERS SHALL CONNECT TO LATERAL PIPING UPSTREAM OF CLEANOUT AND NOT TO CLEANOUT.
7. ASTM D3034 DR 26 PIPE (SDR 35 SHALL NOT BE USED)

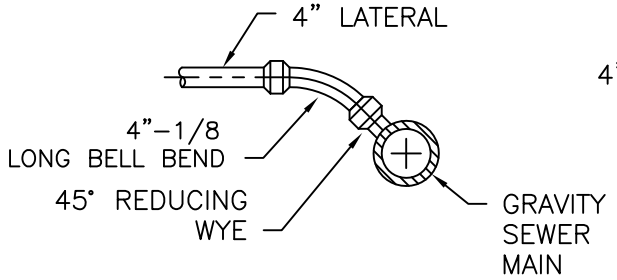


## SECTION

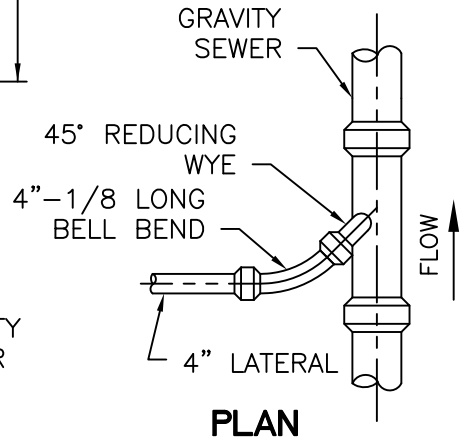


## PLAN

EMERALD COAST UTILITIES AUTHORITY

# SEWER LATERAL CONNECTION

| | |
|---|---|
| SCALE: | N.T.S. |
| DATE: | 12/18/14 |

DETAIL

D-1