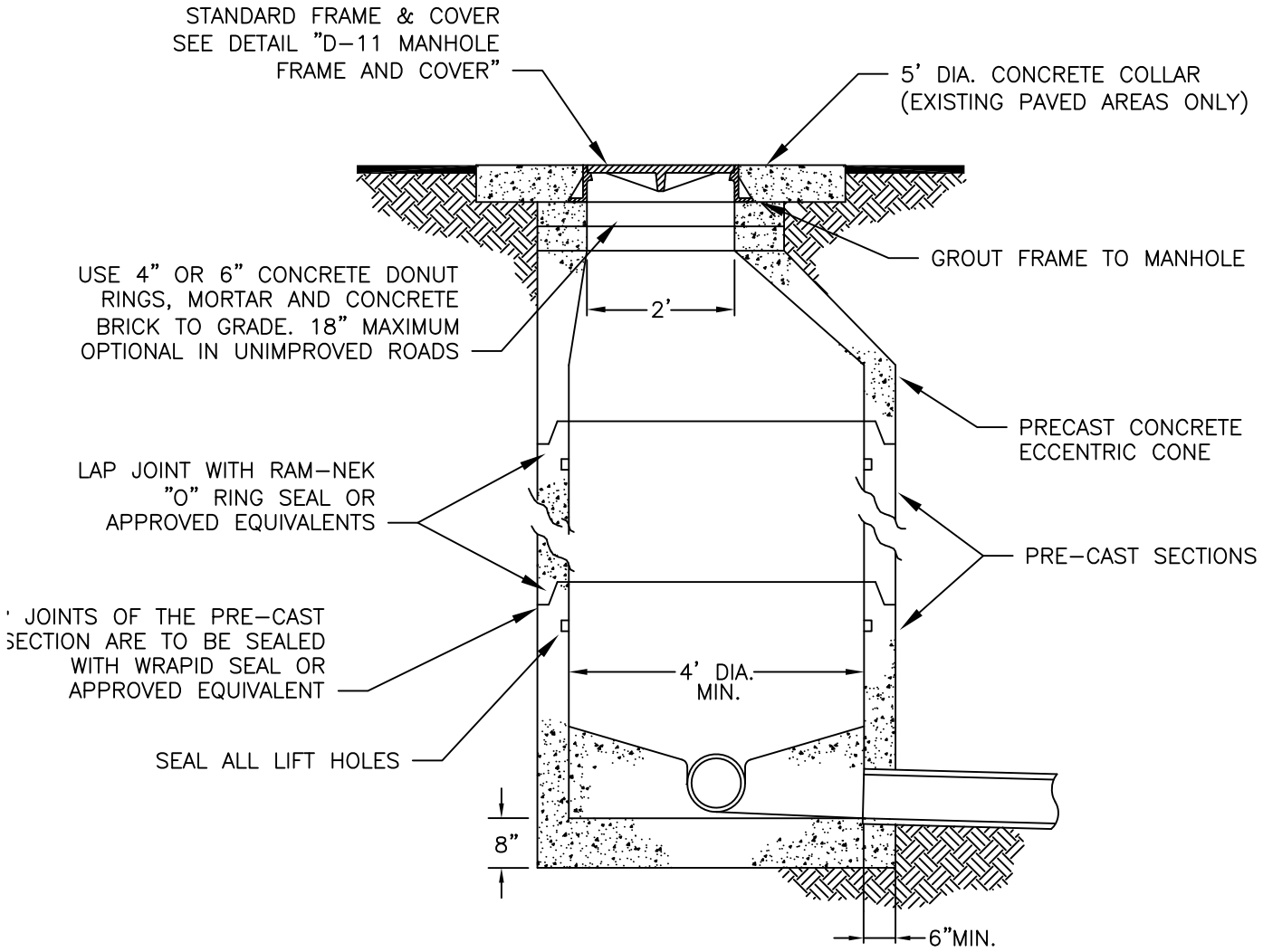

NOTE:

1. SEE SECTION 2570 FOR COMPLETE SPECIFICATIONS
2. VACUUM TEST TO BE COMPLETED IN ACCORDANCE WITH ASTM C–1244 AND PERFORMED PRIOR TO BACKFILLING
3. SUPPORTING SOILS UNDER THE BASE OF THE MANHOLE SHALL BE COMPACTED TO AT LEAST 98% OF MAXIMUM DENSITY

EMERALD COAST UTILITIES AUTHORITY

SCALE:	N.T.S.
DATE:	12/18/14

STANDARD MANHOLE

DETAIL

D-10