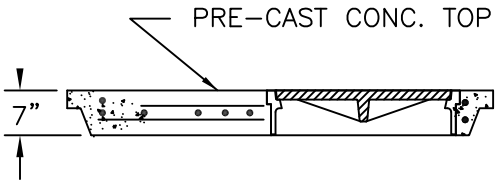

ALTERNATE TOP WITH INVERTED RING

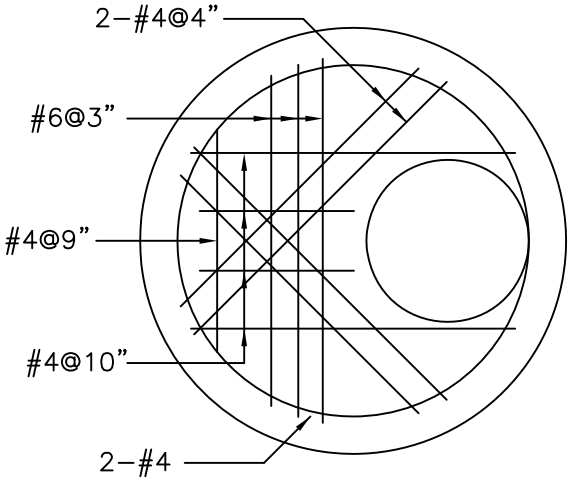

TOP REINFORCING

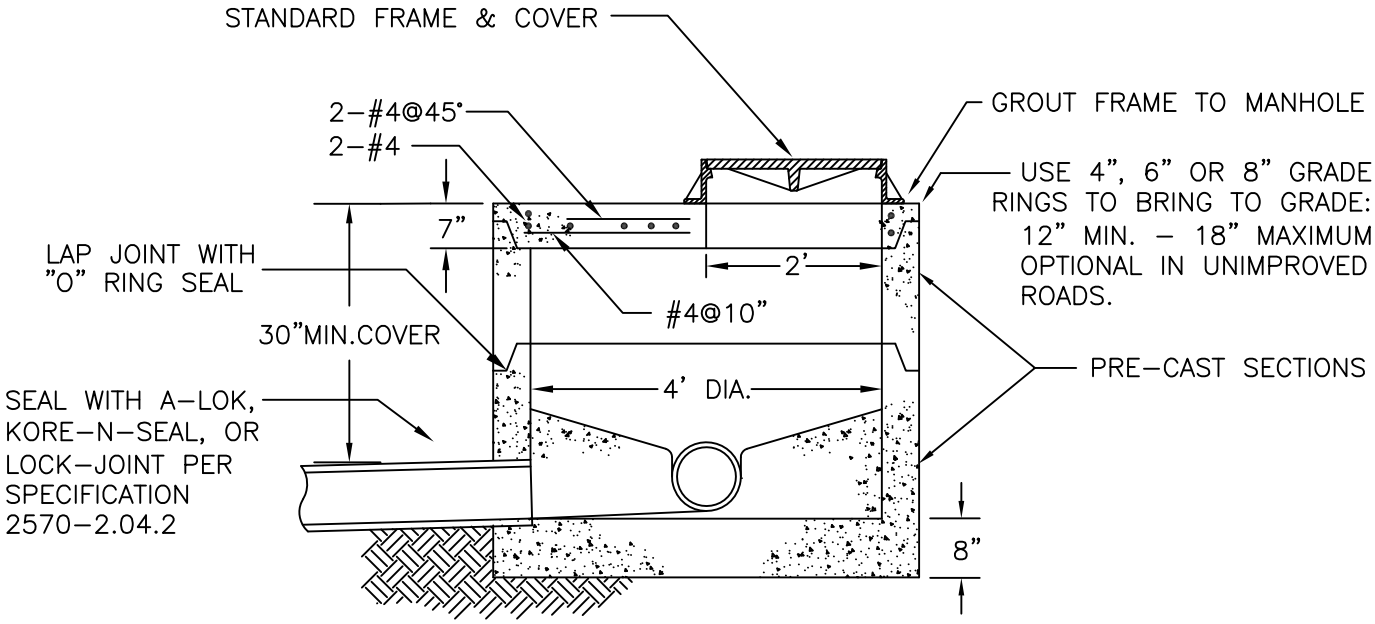

EMERALD COAST UTILITIES AUTHORITY

SCALE:	N.T.S.
DATE:	12/18/14

SHALLOW MANHOLE

DETAIL

D-12