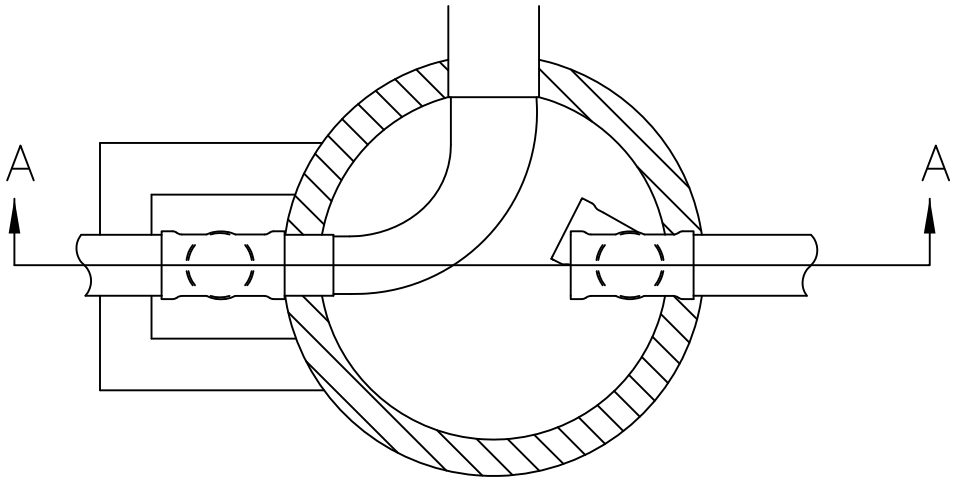

NOTE:
REFER TO SPECIFICATIONS AND DETAILS D–10 &
D–11 FOR NOTES PERTAINING TO MANHOLE CONSTRUCTION.

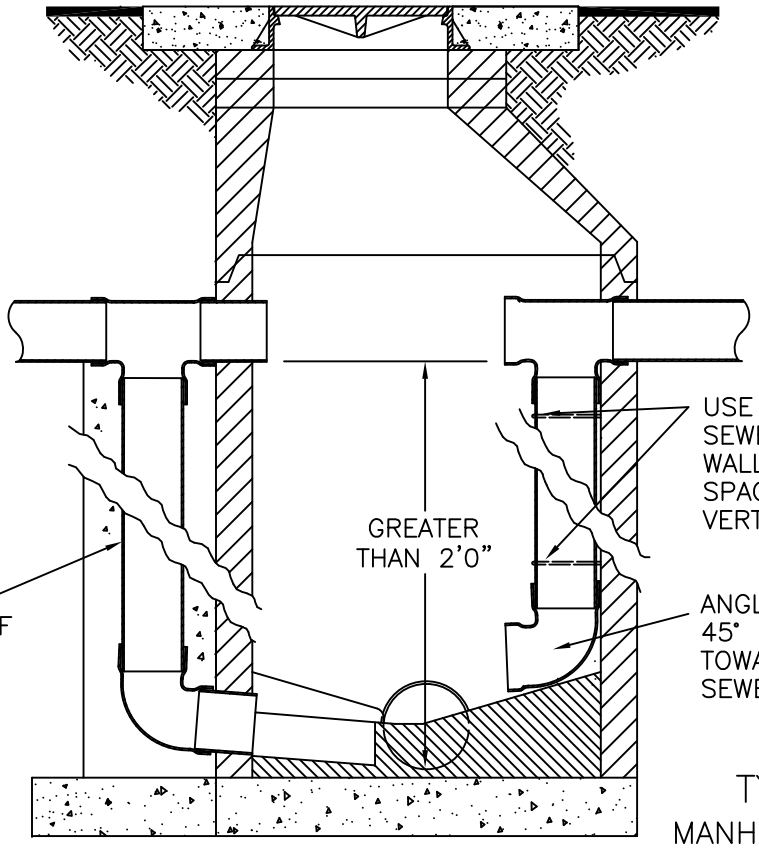

TYPE "A"
MANHOLE–EXTERNAL DROP CONNECTION

TYPE "B"
MANHOLE–INTERNAL DROP CONNECTION (BUILDING SERVICE & LATERALS ONLY)

SECTION A-A

EMERALD COAST UTILITIES AUTHORITY

SCALE:	N.T.S.
DATE:	12/18/14

DROP MANHOLE

DETAIL

D-13