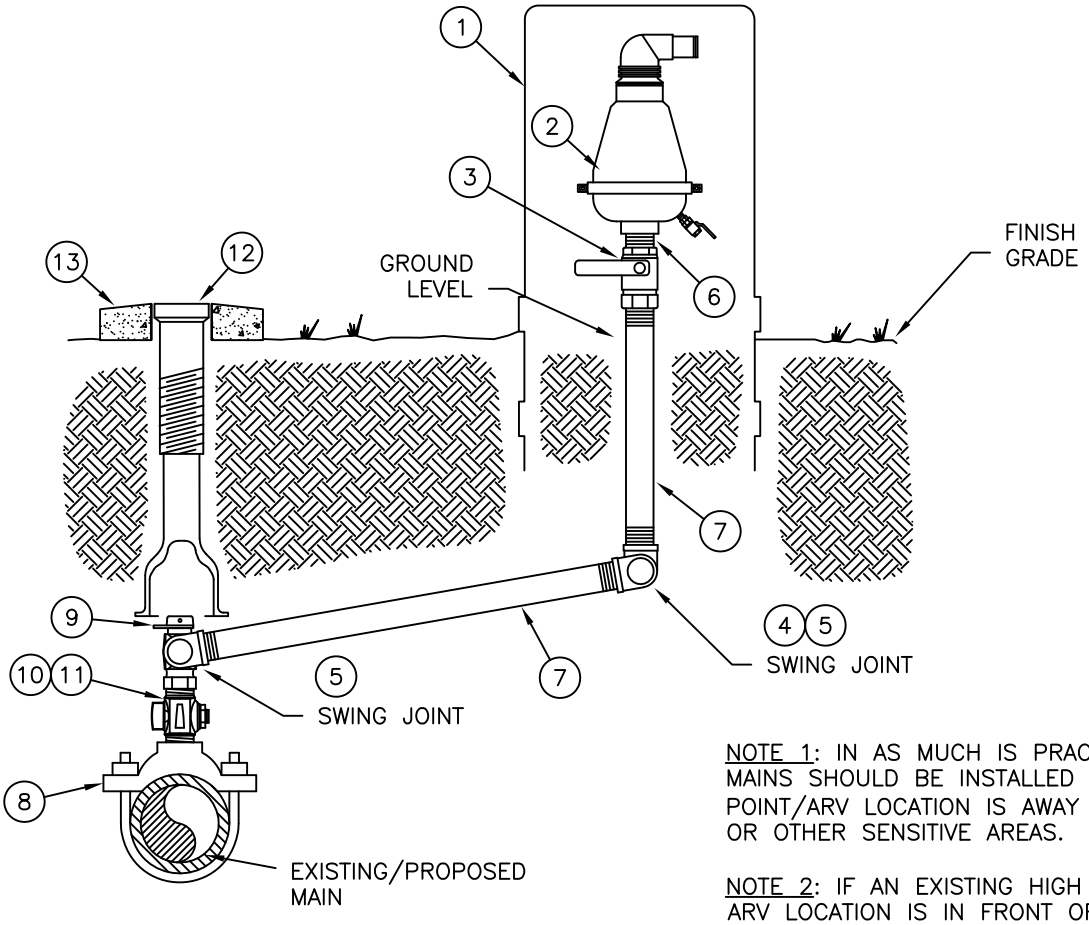

NOTE 1: IN AS MUCH IS PRACTICAL, NEW FORCE MAINS SHOULD BE INSTALLED SUCH THAT HIGH POINT/ARV LOCATION IS AWAY FROM RESIDENCES OR OTHER SENSITIVE AREAS.

NOTE 2: IF AN EXISTING HIGH POINT/PROPOSED ARV LOCATION IS IN FRONT OF A RESIDENCE OR IN A SENSITIVE AREA, THEN CONSULT WITH THE ECUA INSPECTOR AS TO THE BEST ALTERNATIVE LOCATION, PREFERABLY DOWNSTREAM FROM THE HIGH POINT.

MATERIALS		
1	1	ENCLOSURE, WATER PLUS CORPORATION, MODEL #131632 GREEN, WITH PIN ALLEN LOCK
2	1	AIR RELEASE VALVE 2" NPT, ARI MODEL D-025
3	1	2" BALL VALVE, 316 S.S.
4	1	2" STANDARD 90° ELBOW, 316 S.S.
5	2	2" STREET 90° ELBOW, 316 S.S.
6	3	2" SHORT NIPPLE, 316 S.S.
7	2	2" PIPE, 316 S.S. LENGTH AS REQUIRED, 2° ANGLE MIN. (3.5% SLOPE)
8	1	MAIN SIZE x 2" DOUBLE STRAP TAPPING SADDLE, IRON SADDLE WITH 316 S.S. STRAPS
9	1	2" x 90° FIPxFIP ANGLE BALL VALVE FORD PART No. BA11777W
10	1	2" CLOSE NIPPLE, 316 S.S. (EXISTING 2" BRASS CORPORATION STOP) (EXISTING AIR RELEASE VALVE ASSEMBLY INSTALLATION)
11	1	2" BRASS CORPORATION STOP FORD PART FB400-7-NL (NEW AIR RELEASE VALVE ASSEMBLY INSTALLATION)
12	1	VALVE BOX WITH LID LABELED "SEWER"
13	1	CONCRETE VALVE BOX COLLAR

EMERALD COAST UTILITIES AUTHORITY

SCALE: N.T.S.
DATE: 12/18/14

AIR RELEASE/VACUUM VALVE - AUTOMATIC FOR 10" AND SMALLER MAINS

DETAIL

D-31