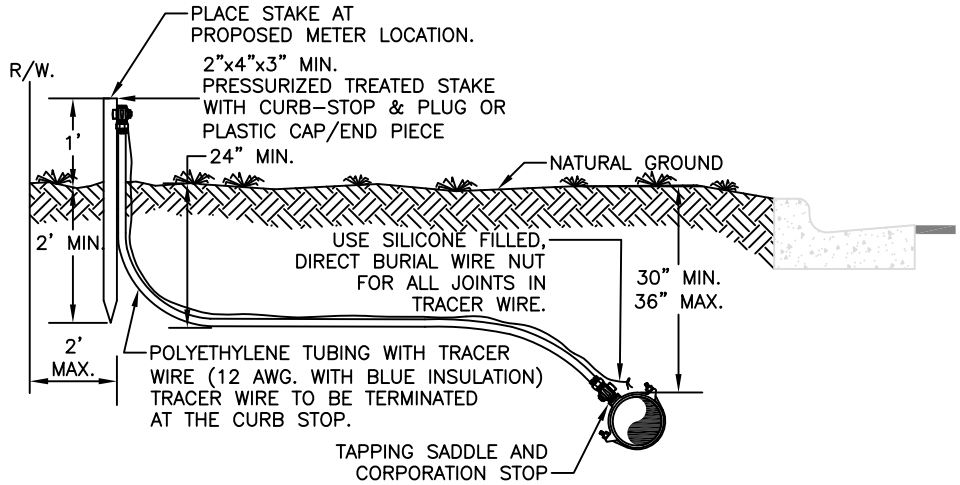

TYPICAL SHORT SERVICE

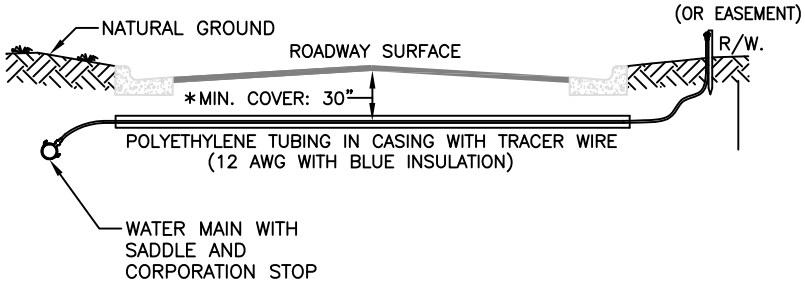

*OR GREATER AS REQUIRED BY CITY / COUNTY / D.O.T.

TYPICAL LONG SERVICE - STREET CROSSING

GENERAL NOTES:

- SERVICE LINES TO BE TERMINATED WITHIN 2 FEET OF THE R/W LINE BUT NOT UNDER ANY TYPE OF PAVEMENT.
- ALL WATER SERVICES SHALL BE INSTALLED 1 FOOT OFF THE COMMON PROPERTY LINE, ON THE OPPOSITE PROPERTY LINE FROM THE PROPOSED ELECTRICAL TRANSFORMERS. THE OWNER/DEVELOPER SHALL COORDINATE THE LOCATION OF THE WATER METER WITH THE POWER COMPANY PRIOR TO INSTALLATION.
- CASING SHALL BE PVC OR HDPE AND SHALL BE COLOR CODED BLUE OR BLACK WITH BLUE STRIPING.
- ALL METER BOXES AND PLUMBING SHALL BE INSTALLED BY THE OWNER/DEVELOPER. ALL METERS SHALL BE INSTALLED BY ECUA BY CONNECTING METER TO CURB-STOP.

RECOMMENDED TUBING SIZES FOR WATER SERVICES			
SIZE OF METER	DESIGN FLOW (GPM)	MAX. LENGTH OF TUBING FOR SIZE INDICATED	
		1"	2"
⅝"	20	92	2679
1"	50	17	492
1½"	100		136
SIZE OF CASING (LONG SERVICE ONLY)		2"	4"

1 1/2" WATER METER ASSEMBLY

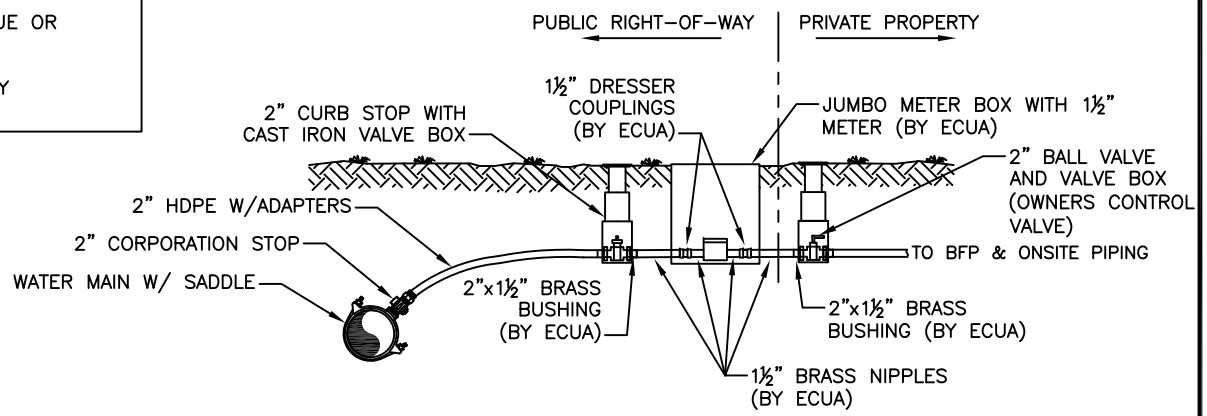

EMERALD COAST UTILITIES AUTHORITY

SCALE: N.T.S.
DATE: 12/18/14

WATER SERVICE FOR 5/8", 1", & 1 1/2" METERS

DETAIL

D-40