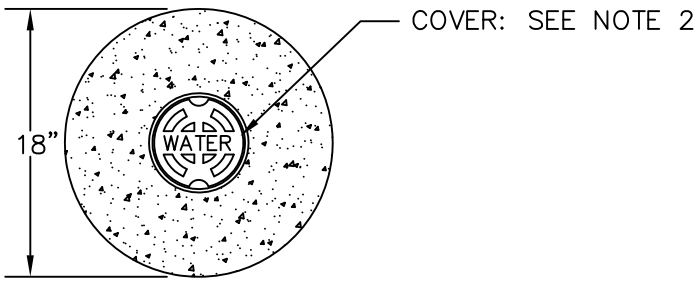

CAST-IN-PLACE COLLAR

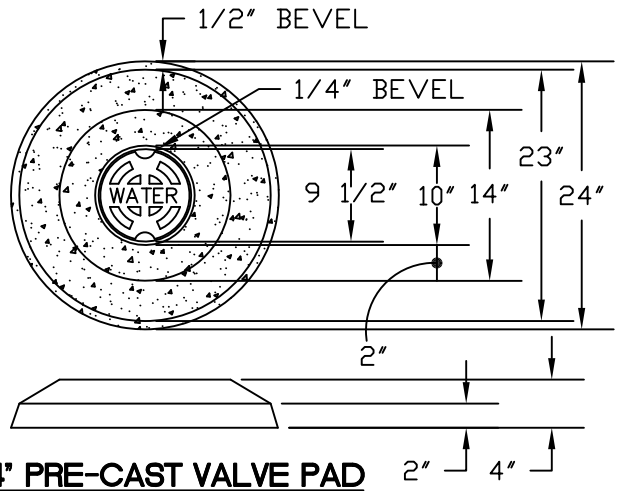

24" PRE-CAST VALVE PAD

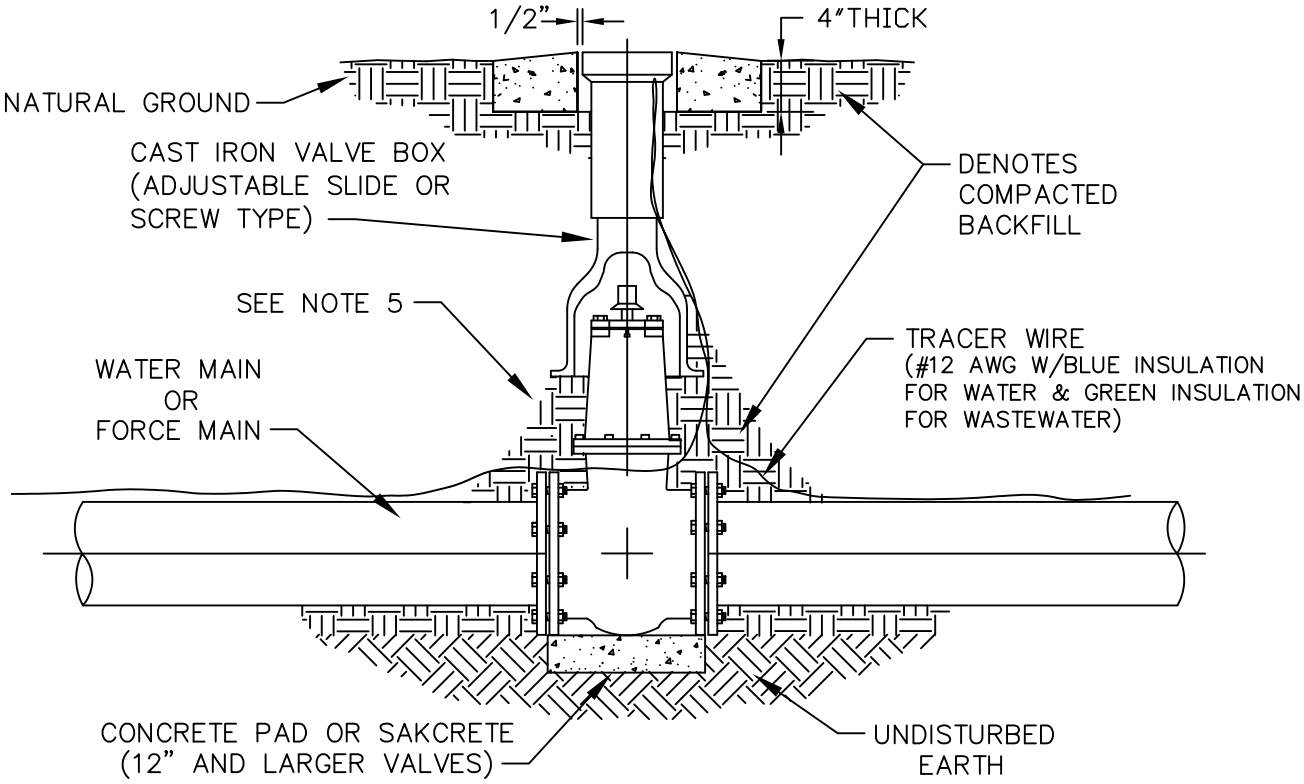

NOTES:

1. VALVE BOX AND BOOT SHALL BE CAST IRON.
2. VALVE COVER SHALL BE MARKED "WATER" OR "SEWER" AS APPLICABLE
3. VALVE BOX TOP & COLLAR SHALL BE FLUSH WITH FINISHED GRADE OR ½" ABOVE NATURAL GROUND LEVEL.
4. GATE VALVE SHALL BE RESILIENT SEAT WITH MECHANICAL JOINT ENDS.
5. EARTH UNDER FLANGE OF VALVE BOX & COLLAR TO BE FIRM AND WELL TAMPED TO ENSURE AGAINST VALVE BOX SETTLING.

EMERALD COAST UTILITIES AUTHORITY

SCALE: N.T.S.
DATE: 12/18/14

TYPICAL VALVE & BOX INSTALLATION

DETAIL

D-43