DUCTILE IRON

STRAIGHT REDUCERS

SMALL SIDE	Minimum Pipe Length to be Restrained, L (ft)									
Pipe Diameter (in)	4	6	8	10	12	14	16	18	20	24
3	18	54	81							
4		42	72	100	124					
6			41	75	103	130	153			
8				43	77	108	133	159		
10					41	77	107	136	161	
12						43	78	110	137	188
14							41	78	108	165
16								42	77	139
18									40	109
20										77

DUCTILE IRON

REDUCING TEES

BRANCH	Minimum Pipe Length to be Restrained, Lb (ft)									
Pipe Diameter (in)	4	6	8	10	12	14	16	18	20	24
3	1	1	1							
4		1	1	1	1	1	1			
6			1	1	1	1	1	1	1	1
8				1	1	1	1	1	1	1
10					12	1	1	1	1	1
12						32	14	1	1	1
14							55	38	21	1
16								73	59	27
18									94	66
20										98

PVC

STRAIGHT REDUCERS

SMALL SIDE	Minimum Pipe Length to be Restrained, L (ft)									
Pipe Diameter (in)	4	6	8	10	12	14	16	18	20	24
3	24	71	107							
4		55	95	132	164					
6			54	99	136	172	203			
8				57	101	142	177	210		
10					54	102	142	180	213	
12						57	103	146	182	249
14							54	103	144	217
16								56	102	184
18									53	143
20										101

PVC

REDUCING TEES

BRANCH	Minimum Pipe Length to be Restrained, Lb (ft)									
Pipe Diameter (in)	4	6	8	10	12	14	16	18	20	24
3	1	1	1							
4		1	1	1	1	1	1			
6			1	1	1	1	1	1	1	1
8				1	1	1	1	1	1	1
10					16	1	1	1	1	1
12						43	19	1	1	1
14							73	50	28	1
16								97	78	36
18									124	87
20										130

NOTES:

1. CALCULATIONS ARE BASED ON THE FOLLOWING ASSUMPTIONS:
   TEST PRESSURE = 150 PSI, SORL GROUP = SM, TRENCH TYPE = 3, DEPTH = 2.5', SAFETY FACTOR = 2
2. WITH REDUCING TEES, THE DISTACE OF THE RUN LENGTH IS ASSUMED TO BE 40'. FOR OTHER RUN LENGTHS (Lr), INDIVIDUAL CALCULATIONS MUST BE MADE.
3. AS A MINIMUM, PIPE RESTRAINTS ARE TO BE PLACED ON THE FIRST JOINT FROM THE FITTING.
4. FOR ALL NEW CONSTRUCTION, WHEN A PIPE MUST BE INSTALLED IN A CASING THE REQUIRED JOINT RESTRAINTS MUST ALSO BE INSTALLED INSIDE THE CASING. THE CASING IS TO BE SIZED ACCORDINGLY.
5. FOR AN EXISTING MAIN LOCATED UNDER A PAVED SURFACE, THE CONTRACTOR WILL NOT BE REQUIRED TO PLACE RESTAINTS ON THE EXISTING PIPE.
6. FOR AN EXISTING MAIN NOT LOCATED UNDER A PAVED SURFACE, THE CONTRACTOR WILL BE REQUIRED TO PLACE RESTAINTS ON THE EXISTING PIPE.

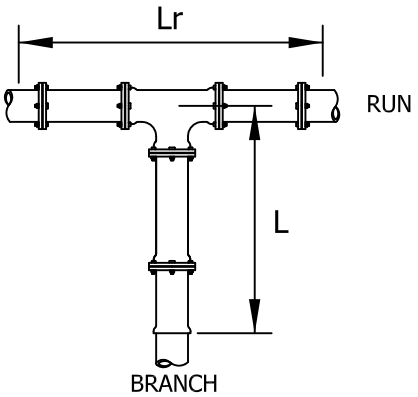

REDUCING TEE

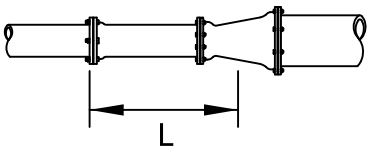

STRAIGHT REDUCER

EMERALD COAST UTILITIES AUTHORITY

SCALE: N.T.S.

DATE: 12/18/14

PIPE JOINT RESTRAINT REDUCERS & REDUCING TEES

DETAIL

D-63