EMERALD COAST UTILITIES AUTHORITY
ENGINEERING MANUAL

Adopted by the Board of the
Escambia County Utilities Authority
on May 26, 1988

Update No.2 - August 1999

Interim Lift Station Standards June 7, 2013

Prepared by
ECUA Engineering Department
9255 Sturdevant Street
P.O. Box 15311
Pensacola, FL 32514-5311

ECUA ENGINEERING MANUAL
USERS' GUIDE

The Manual consists of 4 sections. A description of each section, its contents, and the use of each section is summarized below.

Section

1. ENGINEERING PROCEDURES
   The procedures are for those areas or functions where developers, engineers, contractors and builders must interact with the ECUA Engineering Department. The procedures identify what information is required to be provided to the Engineering Department, how the Engineering Department will process the information, and the responses to be issued by the Engineering Department.

2. DESIGN STANDARDS
   This section is intended for consultant engineer or engineer-of-record when designing and preparing plans for submittal to and review by the ECUA Engineering Department.

3. TECHNICAL SPECIFICATIONS
   This section contains the acceptable specifications for construction of all water and wastewater improvements which will become the responsibility of the ECUA. The engineers design shall conform to these specifications and the contractor shall construct the improvements according to these standards.

4. DETAIL DRAWINGS
   This section contains standard plans for typical improvements and may be considered a supplement to the TECHNICAL SPECIFICATIONS. Where there is a conflict between the Technical Specifications and the Detail Drawings, the Detail Drawings will control.

TABLE OF CONTENTS

◆ DIVISION 1	ENGINEERING PROCEDURES	Pages
Procedure 1	Engineering Review of a Development with a Water and/or Sewer Line Extension • Request for Service Requirements • Utility Service Agreement • Notice of Intent • Contractor's Notification of Commencement of Construction • Certification of Completion – Water • Certification of Completion - Sewer	1-12
Procedure 7	Easements for ECUA Utilities	1-16
Procedure 8	New Product Approval	1-2
Procedure 9	Change Orders	1-3
Procedure 10	Pay Request Submittals	1-3

◆ DIVISION 2	DESIGN STANDARDS	
Section 1	Forward	i
Section 101	Plan Preparation	1-4
Section 556	Potable Water System	1-15
Section 570	Sanitary Wastewater Collection System	1-7
Section 575	Wastewater Lift Stations and Force Mains *(Interim)*	1-9

◆ DIVISION 3	TECHNICAL SPECIFICATIONS	
Section 1001	Abbreviations and Definitions	1-5
Section 1004	Testing Laboratory Services	1-3
Section 1013	Soils and Subsurface Investigations	1
Section 2102	Clearing and Grubbing	1-2
Section 2221	Trench Excavation, Backfill and Compaction	1-7
Section 2224	Pipe Boring, Drilling and Jacking	1-6
Section 2556	Water Distribution and Service Lines	1-32
Section 2570	Sanitary Sewers	1-14
Section 2575	Wastewater Lift Stations *(Interim)*	1-20
Section 2576	Sanitary Sewer Force Mains (*Interim*)	1-21
Section 2577	Fiberglass Wet Well *(Interim)*	1-7
Section 3300	Cast-in-Place Concrete	1-5
Section 16010	Basic Electrical Requirements	1-6
Section 16050	Basic Electrical Materials & Methods	1-4
Section 16055	Overcurrent Protective Device Coordination	1-6
Section 16060	Grounding and Bonding	1-6
Section 16073	Hangers and Supports for Electrical Systems	1-4
Section 16075	Electrical Identification	1-6
Section 16120	Conductors and Cables	1-4
Section 16130	Raceways and Boxes	1-8
Section 16211	Electricity Metering	1-4
Section 16410	Enclosed Circuit Breakers	1-6
Section 16521	Exterior Lighting	1-8
Section 16900	Systems Integration	1-8
Section 16910	Control Panel Construction	1-4
Section 16950	Field Instruments	1-4

Procedure for Engineering Review of a Development with a Water and/or Sewer Line Extension

Purpose:

This procedure provides an outline of the steps to receive ECUA approval of a development that includes extensions to ECUA water and/or sewer mains, or the installation of private water and/or sewer mains. The ECUA will coordinate with the developer and his engineer to minimize the time required for review. The timely submittal of all the required information will be helpful in assuring a prompt review.

I. Service Requirements (Optional)

A. At the conceptual stage of a project, the Owner/Developer may submit a written request to the ECUA Engineering Department for the availability of water and/or sewer service. Form E 1.1 may be used for this written request. This is an optional step in the review process.

The written request shall include the following information:

1. Type of development (i.e. commercial, residential, industrial, etc.)
2. Size of the development (i.e., number of units or homes, square footage of commercial building, etc.)
3. Location Map (to scale)
4. Type of service requested (water and/or sewer)
5. Service requirements (i.e. projected flows)
6. How water and/or sewer service will be provided if not by ECUA
7. Signature of the Owner, the Developer or the Engineer
8. Address and Telephone Number of the Owner or the Developer and of the submitter

B. ECUA's Engineering Department will review the request and respond with either:

1. Unconditional Availability – Service is available adjacent to the site with capacity to serve the project. This does not guarantee capacity in the system.
2. Conditional Availability – If facilities are in need of upgrade, or if facilities are deficient, they will be identified.

II. Preliminary Submittals

A. Preliminary submittals may be submitted once the Civil Engineering plans for the Development are substantially complete. The following items are required (Items that must be signed & sealed by a Professional Engineer registered in the State of Florida):

1. **Three sets of preliminary plans** of the proposed project including the following information:

   (a) Proposed improvements, with utility line sizes and types indicated, paving and stormwater improvements indicated and building footprints shown

   (b) Existing improvements, with utility line sizes and types indicated

   (c) Topographic contours at 2-foot intervals (minimum)

   (d) Hydrographic data including groundwater information and the location of any open bodies of water and any jurisdictional wetlands

   (e) Septic systems

   (f) Other pertinent information

2. **Two sets of specifications**, signed and sealed.

   If the project is to be constructed in accordance with the specifications contained within the ECUA Engineering Manual, in unmodified form, this item may be omitted from the review submittal/procedure.

3. **Two sets of Lift Station Calculations** (if applicable), signed and sealed.

4. **Two copies of the Executed Utility Service Agreement with Exhibits A and B attached** (see ECUA Engineering Manual for blank forms).

5. **One executed copy of the Notice of Intent** to Construct an Extension to Escambia County Utilities Authority's Drinking Water Distribution System and/or Wastewater Collection/Transmission System (see ECUA Engineering Manual for blank forms).

6. **The review fee**, in the form of a check in the amount of $250, payable to the ECUA.

7. **Draft easement forms**, if applicable (see ECUA Engineering Manual for blank forms).

8. **Cost estimate information**, if applicable, for oversizing requests.

B. The package will be processed as follows:

1. The Engineering Department Secretary will log it in, indicating items received, and in what quantity.

2. A Project Engineer will be assigned to the project, and will review the package for completeness.

3. One copy of the plans will be routed to the Regional Services Department and to the Water and Wastewater Department for comments.

4. The plans, specifications and calculations will be reviewed for compliance with ECUA Requirements or FDEP Requirements, as appropriate.

5. The Notice of Intent and the Utility Service Agreements will be reviewed for completeness and routed to the appropriate individuals for execution.

C. One of the following responses will be forwarded to the submitter:

1. A request for additional information will be issued when clarification is required or if all the required items were not included with the package.

2. A single copy of the plans, specifications and/or lift station calculations, either "Approved," "Approved with Comments," or "Revise and Resubmit" may be returned to the submitter with comments to be used to prepare the Final Review Package. A letter may be issued in lieu of the marked plans, indicating changes required for the Final Review Package.

III. Final Submittals

A. Once comments from the Preliminary Review Package have been addressed by the submitter, the Final Review Package shall be submitted. Revised items shall be submitted in their original quantities (i.e. if specs have been revised, two sets are required). Six sets of plans, signed and sealed by a Professional Engineer registered in the State of Florida shall be submitted.

The Final Review Package will be processed as follows:

1. The Department Secretary will log it in, indicating items received, and in what quantity.

2. The Project Engineer will review the package for completeness.

3. One copy of the plans will be routed to the Regional Services Department and to the Water and Wastewater Department for comments.

4. The plans, specifications and calculations will be reviewed for concurrence with ECUA comments indicated on the Preliminary Review Package.

B. Packages marked "Revise and Resubmit" by the Project Engineer will be returned to the submitter for corrections. One copy of submitted information shall be retained by ECUA.

C. Package marked "Approved" or "Approved with Comments" will be included in an Approval Package to the Owner/Developer. Inspection fees for the Development must be paid prior to the Owner/Developer picking up the package from the Engineering Department.

IV. Construction

A. Construction is authorized to proceed upon receipt of the Approval Package from ECUA's Director of Engineering. Other permits may be required from other agencies; the approval of ECUA's Engineering Department does not constitute approval from any other regulatory agency.

B. The Owner/Developer's Contractor must provide 72 hours written notice to ECUA's Engineering Department prior to beginning water or wastewater utility construction activities. (See ECUA Engineering Manual for Notification Form).

C. Any substantial changes to the construction plans shall be submitted to the Project Engineer and must be approved prior to construction of affected facilities.

D. The Contractor shall have, on the job site, one set of the ECUA "Approved" or "Approved with Comments" plans. A current set of As-Built plans shall also be kept on the job site.

E. All questions and comments regarding the construction plans shall be directed to the Engineer of Record (Owner/Developer's Engineer).

F. If facilities are not installed in accordance with the approved plans and/or the requirements of the ECUA, a re-inspection fee will be assessed for each required reinspection. Refer to the ECUA Code Book for specifics.

V. Final Acceptance

A. Upon completion of construction, including testing, the Engineer of Record shall submit a written statement to ECUA's Engineering Department stating the project was completed according to the approved plans and requesting final inspection.

ECUA will schedule the final inspection. The following items shall be submitted to the ECUA Construction Inspector upon successful completion of the Final Inspection:

1. **One copy of the approved bacteriological test results** for installed water systems.

2. **Two sets of As-Built drawings** completed by the Engineer of Record. A diskette containing the electronic as-builts in AutoCAD format, if applicable. As-builts in either format should clearly indicate the name, address and phone number of the Underground Utility Contractor of Record.

3. **Certification of Developer Form (Form SD-3) with a Statement of Improvement values or cost** (if applicable)

4. **Certification of Completion of Construction for an Extension to Escambia County Utilities Authority's Drinking Water Distribution System and/or Certificate of Completion of Construction for an Extension to Escambia County Utility Authority's Wastewater Collection/Transmission System** (see ECUA Engineering Manual for blank forms).

5. **Recorded plat and/or any applicable easement forms** (executed and recorded by the Owner/Developer).

B. After acceptance, the ECUA Engineering Department will issue a Certification of Final Acceptance Notice.

UTILITY SERVICE AGREEMENT FOR CONSTRUCTION OF WATER AND WASTEWATER SYSTEM EXTENSIONS

This AGREEMENT is made and entered into by and between the EMERALD COAST UTILITIES AUTHORITY, a governmental body, corporate and politic, ("ECUA") and
(Name of Company or Individual): _____
(Business Address): _____
(Business Tax I.D. No.): _____
(the "Developer"). This Agreement shall be effective as of the date on which both the Developer and ECUA or their representatives, as indicated below have signed it.

WHEREAS, the Developer owns or otherwise controls a development interest in certain land (the "Property") in Escambia County, Florida, more particularly described in Exhibit "A" to this Agreement and intends to construct on the Property a (Describe the type of project, i.e. subdivision, apartments, commercial, etc.):
_____
_____
_____,
to be known as (Name of Project):
_____ (the "Project");
and

WHEREAS, the Developer desires ECUA to provide to the Project:

A. Water service –
Projected average daily demand of _____ gallons per day;
B. Wastewater service –
Projected average daily flow of _____ gallons per day; and

WHEREAS, ECUA is willing to provide such service upon the terms and conditions hereinafter set forth;

NOW, THEREFORE, in consideration of the premises and the mutual covenants herein contained the Developer and ECUA hereby agree as follows:

1. The Developer shall, at the sole cost and expense of the Developer:

A. Construct or cause to be constructed such mains, services, laterals, lift stations, force mains, fire hydrants and other facilities as may be necessary for ECUA to provide such service to the Project.

B. Construct or cause to be constructed such other facilities outside the Property as are generally described in Exhibit "B" to this Agreement.

2. The Developer shall pay all Project costs of any kind, including the cost of any necessary relocation of existing utilities, and shall secure such permits and easements as may be required. However, ECUA may elect to modify the intended design and participate financially in certain system extensions as necessary to meet other current or future needs of the system. Such participation by ECUA shall be described in Exhibit "D" to this Agreement.

3. All such design and construction shall be done in accordance with the requirements of the ECUA Engineering Manual, latest edition.

4. No such construction shall be commenced until plans and specifications therefor have been submitted to and approved in writing by ECUA and other agencies or permitting authorities having jurisdiction.

5. In accordance with the requirements and conditions of the Plan Approval process the Developer or his representative shall notify ECUA in writing before commencing construction. Failure of the Developer or his Contractor to provide timely notice before commencement of construction, as required, may be considered as a breach of this Agreement. The Developer will be responsible for payment of penalties and other costs associated with such failure to notify.

6. All work related to the construction of extensions to ECUA water or wastewater facilities shall be subject to inspection by ECUA. Employees and agents of ECUA may at any reasonable time during or after construction enter upon the Property for the purpose of inspecting such facilities. Any work done prior to proper notification or without appropriate inspection is subject to rejection. Work requiring repeated inspections, failure to properly prepare work for inspection, or other actions which result in excessive use of inspection services, shall be cause for assessment of additional inspection fees payable prior to final completion or acceptance of the project.

7. Upon completion of construction the engineer that prepared the approved plans and specifications shall at the Developer's expense certify such facilities as to conformity with the approved plans and specifications and provide copies of the project plan drawings indicating the final, as-built record of construction including location references. Also prior to the facilities being placed into service the Developer shall provide or cause to be provided additional documentation including but not limited to easements, warranties, dedications, etc.

8. Ownership and maintenance responsibility for the completed facilities shall be defined by ECUA and outlined in Exhibit "C" to this Agreement. Prior to completion of the project, the Developer shall provide appropriate easements or

property transfers for all facilities that are proposed for ECUA ownership but that are not located in public rights-of-way.

9. Upon determination by ECUA that the facilities have been constructed by the Developer in accordance with the approved plans and specifications and all applicable requirements of ECUA and other agencies having jurisdiction, ECUA shall accept ownership and maintenance responsibility or acknowledge satisfactory completion of construction of the facilities as appropriate. For facilities not being accepted by ECUA the Developer shall provide the name, address, phone number and other contact information for the person or agency responsible for the maintenance of the facilities.

10. No building or similar facility shall be connected to any new or existing water or wastewater facilities until such time as ECUA acknowledges satisfactory completion of construction, and until all applicable rates, fees and charges have been paid to ECUA. If for any reason service is established to the Project prior to the receipt of all documentation necessary to meet the requirements of the completion or acceptance process such service shall be considered temporary and limited to a period of ninety days. Failure of the Developer to provide the necessary documentation within this period may result in discontinuance of service until such documentation is provided.

11. Upon acceptance of any facility by ECUA, such facility, together with all permits, easements, warranties, engineering drawings, and other matters owned by the Developer in connection therewith shall be delivered to and owned by ECUA. The Developer shall execute such instruments of conveyance as ECUA may require, and shall provide ECUA with as-built records of construction in a format suitable to ECUA.

12. The Developer hereby warrants the new facilities to be free of defects in material, workmanship and design for two (2) years after the acceptance or acknowledgment of completion thereof. Any such defect appearing within one (2) years after acceptance shall be corrected by the Developer or, at the option of ECUA, shall be corrected by ECUA and the Developer shall reimburse ECUA for the cost of such correction within 30 days after receipt of a statement for the same.

13. The Developer shall not engage, directly or indirectly, in the ownership or operation of a water or wastewater system within or serving the Property or the Project. This provision does not preclude the submetering of water for purposes of allocating cost to individual dwelling units such as in apartment complexes in accordance with Florida laws.

14. The Developer agrees to operate and maintain any completed water or wastewater facilities in compliance with all federal, state, local and ECUA codes

and requirements, and agrees to allow ECUA access as required to inspect the facilities for compliance with those requirements.

15. The Developer hereby releases and agrees to hold harmless, indemnify, protect, and defend ECUA, its members, officers, employees and agents from any and all claims, damages, actions or causes of action relating to the planning, design, and construction of such facilities, or relating to any denial by the Florida Department of Environmental Protection or other authority of any permit to provide utility service to the Property, or any failure by the Developer to construct such facilities or develop the Property.

16. This Agreement may not be amended except by a writing executed by the Developer and by ECUA. All documents necessary for the implementation of this Agreement, including all permits, engineering design and construction contracts, plans and specifications for the facilities as and when approved and filed with the ECUA are a part of this Agreement and incorporated herein by reference.

17. The laws of the State of Florida shall govern this Agreement.

EXECUTED by the Developer or its representative this _____ day of _____, 20____.

DEVELOPER

_____ BY:_____

Witness

Printed Name & Title:_____

EXECUTED by the undersigned representative of ECUA this _____ day of _____, 20____ .

EMERALD COAST UTILITIES AUTHORITY

_____ BY:_____

Witness

Title:_____

EXHIBIT "A" – DESCRIPTION OF PROPERTY

The Escambia County Property Appraiser's Parcel I.D. No. for the Property is

_____

_____

The legal description of the Property on which the proposed Project is to be constructed is as follows:

_____

_____

_____

_____

_____.

_____

_____

_____

_____

_____

_____

_____

_____

_____

_____

_____

_____

_____

_____

_____

_____

_____

_____

_____

_____

_____

_____

_____

_____

_____

_____

_____

_____

_____

(Description may be attached. If so, please note).

EXHIBIT "B" – OFFSITE IMPROVEMENTS

The Developer intends to construct the following water or wastewater facilities outside the boundaries of the Property. The Developer or his engineer has confirmed that the proposed facilities are located in public rights-of-way or, if not, the Developer shall prior to construction acquire a permanent easement or access agreement in ECUA's favor sufficient for the long term operation, maintenance and repair of the facilities.

Description of Offsite Facilities:

EXHIBIT "C" – OWNERSHIP & MAINTENANCE RESPONSIBILITY

It is the intent of the Developer and of ECUA that the ownership and maintenance responsibility for the water or wastewater facilities to be constructed for this Project will be as follows after final completion or acceptance.

ECUA
Upon completion of construction and provision by the Developer of all appropriate completion documents the following described facilities will be accepted for ownership, maintenance and operation by ECUA:

____ All facilities as shown on the approved Plans, or

Those facilities as shown on the approved Plans as described below:

_____
_____
_____
_____
_____
_____
_____

Developer
Upon completion of construction and provision by the Developer of all appropriate completion documents the following described facilities will be retained for ownership, maintenance and operation by the Developer or his successor:

____ All facilities as shown on the approved Plans, or

Those facilities as shown on the approved Plans as described below:

_____
_____
_____
_____
_____
_____
_____

Ownership and contact information for these facilities will be as follows:
Owner's Name: _____
Owner's Address:_____
Contact Person: _____
Daytime Phone No. _____
Emergency Contact No: _____

EXHIBIT "D" – ECUA PARTICIPATION

The ECUA requires the Developer to modify the design of the Project as outlined below. ECUA will pay the difference in cost between the Developer's desired Project and ECUA's required modifications. The differential cost of design and construction related to the modification shall be in the estimated amount listed below or as otherwise approved by ECUA's Executive Director or the ECUA Board. Payments shall be made after completion or acceptance based on documented actual costs, satisfactory to ECUA, in an amount not to exceed the estimated cost without prior approval by ECUA.

Required Modifications:

_____
_____
_____
_____
_____
_____
_____
_____
_____
_____
_____
_____
_____
_____
_____
_____
_____
_____
_____
_____
_____
_____
_____

Estimated Original Cost of Project (portion affected by modification): $ _____

Estimated Revised Cost of Project (portion affected by modification): $_____

Estimated Differential Cost: $_____

Notice of Intent to Construct
an Extension to Emerald Coast Utilities Authority's

❑ **Drinking Water Distribution System and/or**
❑ **Wastewater Collection/Transmission System**

P.O. Box 15311 9300 Sturdevant St. Pensacola, FL 32514-0311 Phone: (850) 476-5110 Fax: (850) 494-7335

Instructions: This form is to be completed and submitted to the ECUA Engineering Department along with six (6) sets of engineering plans and specifications, and other supporting documentation, AT LEAST 30 DAYS PRIOR TO INITIATING CONSTRUCTION. All applicable blanks must be filled in. This form is for water and sewer lines 12 inches or less in diameter and pump stations appurtenant to such force mains.

I. Project Information:

Project Name: _____

Location: _____

Section: _____ Township: _____ Range: _____

Escambia County Property Appraiser's I.D. No(s).: _____

This project will serve:_____ Single Family Homes, _____Multifamily Units, _____ Commercial Facilities,

_____Utility Relocation, Other (explain) _____

Estimated increase in flow/demand for water: _____MGD and/or wastewater:_____MGD

Owner/Developer: _____

Address: _____

Telephone No.: _____ Fax No.: _____

II. Statement by Owner/Developer:

I, the undersigned owner or authorized representative of _____* certify that the above information is true and complete to the best of my knowledge. I acknowledge that it is my responsibility to ensure that the facilities are constructed as designed and I have retained the services of a Professional Engineer registered in the state of Florida to observe that the construction of the project is in accordance with the engineering plans as submitted and approved. I am aware that the use of this permit is not transferable and will expire after 5 years. (*Attach notarized letter of authorization.)

_____
Signature of Owner or Owner's Representative*

_____
Printed Name and Title

_____
Company Name (Print or Type)

_____
Company Address (Print or Type)

_____
Telephone Number Date

_____
Facsimile Number Date

III. Statement by Engineer:

I certify that the engineering features of this system have been designed by me or those under my direct supervision in accordance with Chapters 62-604/62-555 FAC and the latest edition of the ECUA Engineering Manual, and any other regulatory requirements. A Certification of Completion Form, As-built Drawings, and appropriate clearances will be submitted to ECUA after completion of the facilities in order to obtain approval to place the facilities in service.

_____
Signature Sealed with Embossed Seal Date

_____
Printed Name Florida Registration Number

_____
Company Name (Print or Type)

_____
Company Address (Print or Type)

_____
Telephone Number Date

_____
Facsimile Number Date

IV. Approval by ECUA:

The drinking water zone serving this system will be:

☐ North Zone ☐ South Zone ☐ Pensacola Beach ☐ Other (specify) _____

The Water Reclamation Facility serving this system will be:

☐ CWRF ☐ Bayou Marcus ☐ Pensacola Beach ☐ Other (specify) _____

The construction of these facilities is hereby approved in accordance with ECUA's Memorandum of Agreement with the Florida Department of Environmental Protection for the ECUA to independently regulate the construction of water distribution and sewage collection and transmission mains and pump stations appurtenant to such force mains.

_____
Signature

_____
Printed Name

_____
Title Date

CONTRACTOR'S
NOTIFICATION OF COMMENCEMENT OF CONSTRUCTION

To: EMERALD COAST UTILITIES AUTHORITY

ATTN:_____(Inspector)
Engineering Department
9255 Sturdevant Street **Phone** **(850) 969-3310**
Pensacola, FL 32514 **FAX** **(850) 969-6511**

Re: _____ _____
(Project Name) (ECUA Submittal No.)

Phase No. (If Applicable): _____

Developer: _____

Civil Engineer: _____ Date Approved: _____

CONTRACTOR INFORMATION

Firm Name: _____

Responsible Officer: _____

Title: _____

Address: _____

_____

Phone: _____ FAX: _____

The superintendent on this job will be _____

This is to notify you that construction will begin on: _____

Printed Name: _____

Signed: _____ Date: _____

This notice must be delivered or faxed to the ECUA Engineering Department at least three (3) ECUA business days prior to commencement of construction. Failure of the contractor to provide proper notification prior to commencement of construction is a violation of ECUA's Rules and Regulations, and is subject to fines and penalties.

EMERALD COAST UTILITIES AUTHORITY
P.O. Box 15311 9255 Sturdevant St. Pensacola, FL 32514-0311 Phone: (850) 969-3310 Fax: (850) 969-6511

Certification of Completion of Construction for an Extension to Emerald Coast Utilities Authority's Drinking Water Distribution System

Instructions: This form is to be completed and submitted to the ECUA Engineering Department along with one (1) set of record drawings, and other supporting documentation required below, PRIOR TO PLACING THE SYSTEM INTO OPERATION. A distribution system extension should not be placed into service without prior written ECUA approval. All applicable blanks must be filled in.

I. Project Information

ECUA Submittal No.: _____

Project Name: _____

Location: _____

Date of connection to ECUA system: _____

Owner/Developer: _____

Address: _____

Telephone No.: _____ Fax No.: _____

Required Attachments for ECUA Acceptance of Ownership and O&M of System:

- ☐ Bacteriological Test Results
- ☐ Letter from Engineer of Record for corrected punch list items
- ☐ Two (2) sets of as-built plans completed by Engineer of Record and one (1) set on diskette in AutoCAD format, if available
- ☐ Form SD-3 – Certification of Developer Form, with an itemized Statement of Improvement values or cost, if applicable
- ☐ Recorded plat and/or any applicable easement forms (executed and recorded by the Owner/Developer)

Substantial deviations from the approved plans and specifications:

_____

_____

_____

_____

II. Statement by Professional Engineer:

I certify that the project has been completed substantially in accordance with the approved plans and specifications, or the deviations will not prevent the system from functioning in compliance with the requirements of Chapters 62-555 and 62-550, F.A.C., and/or the ECUA Engineering Manual. These determinations have been based upon on-site observation of construction, scheduled and conducted by me or by a project representative under my direct supervision, for the purpose of determining if the work proceeded in compliance with plans and specifications and application materials. I further certify that record drawings for the facilities have been reviewed by me, or by an individual(s) under my direct supervision, for completeness and adequacy, and have been proved to the permittee. I also certify that the new or altered water mains in this project have been disinfected and bacteriologically tested* in accordance with Chapters 62-555, F.A.C. and applicable AWWA disinfection standards. I further certify that the record drawings identify those substantial deviations noted above.

_____
Signature Sealed with Embossed Seal

_____
Printed Name Florida Registration Number

_____
Company Name (Print or Type)

_____
Company Address (Print or Type)

_____
Telephone Number Date

_____
Facsimile Number Date

**For all new and altered public drinking water facilities, bacteriological sampling shall be conducted by first reducing the total chlorine residual in the water within the facilities to no more than 4 mg/L and then collecting daily bacteriological samples (taken at least 24 hours apart) for two or more consecutive work-days until satisfactory test results are obtained. Bacteriological test results shall be considered satisfactory if two consecutive daily samples from each sample location show the absence of total coliform organisms. Bacteriological test results will be considered invalid if the results are for samples collected more than 30 days before the results are received ECUA, and if the pressure in the mains is not maintained at 20 psi or greater after the samples are collected.*

III. Approval by ECUA:

Drinking Water Zone: _____ North; _____ South; _____ Pensacola Beach; _____ Other

The release of these facilities for operation is hereby approved in accordance with ECUA's Memorandum of Agreement with the Florida Department of Environmental Protection for the ECUA to independently regulate the construction of water distribution and sewage collection and transmission mains and pump stations appurtenant to such force mains.

_____
Signature

_____
Printed Name

_____
Title Date

1.11b

EMERALD COAST UTILITIES AUTHORITY
P.O. Box 15311 9255 Sturdevant St. Pensacola, FL 32514-0311 Phone: (850) 969-3310 Fax: (850) 969-6511

Certification of Completion of Construction for an Extension to Emerald Coast Utilities Authority's Wastewater Collection/Transmission System

Instructions: This form is to be completed and submitted to the ECUA Engineering Department along with one (1) set of record drawings, and other supporting documentation required below, PRIOR TO PLACING THE SYSTEM INTO OPERATION. A collection/transmission system should not be placed into service without prior written ECUA approval. All applicable blanks must be filled in.

I. Project Information

ECUA Submittal No.: _____

Project Name: _____

Location: _____

Date of connection to ECUA system: _____

Owner/Developer: _____

Address: _____

Telephone No.: _____ Fax No.: _____

Required Attachments for ECUA Acceptance of Ownership and O&M of System:

- ❑ Letter from Engineer of Record for corrected punch list items
- ❑ Two (2) sets of as-built plans completed by Engineer of Record and one (1) set on diskette in AutoCAD format, if available
- ❑ Form SD-3 – Certification of Developer Form, with an itemized Statement of Improvement values or cost, if applicable
- ❑ Recorded plat and/or any applicable easement forms (executed and recorded by the Owner/Developer)
- ❑ Test Results (if applicable)

Substantial deviations from the approved plans and specifications:

_____

_____

_____

_____

II. Statement by Professional Engineer:

I certify that the project has been completed substantially in accordance with the approved plans and specifications, or the deviations will not prevent the system from functioning in compliance with the requirements of Chapter 62-604, F.A.C., and/or the ECUA Engineering Manual. These determinations have been based upon on-site observation of construction, scheduled and conducted by me or by a project representative under my direct supervision, for the purpose of determining if the work proceeded in compliance with plans and specifications and application materials. I further certify that record drawings for the facilities have been reviewed by me, or by an individual(s) under my direct supervision, for completeness and adequacy. I further certify that the record drawings identify those substantial deviations noted above.

_____
Signature Sealed with Embossed Seal

_____
Printed Name Florida Registration Number

_____
Company Name (Print or Type)

_____
Company Address (Print or Type)

_____
Telephone Number Date

_____
Facsimile Number Date

III. Approval by ECUA:

The Water Reclamation Facility serving this system will be:

☐ CWRF ☐ Bayou Marcus ☐ Pensacola Beach ☐Other (specify) _____

The release of these facilities for operation is hereby approved in accordance with ECUA's Memorandum of Agreement with the Florida Department of Environmental Protection for the ECUA to independently regulate the construction of water distribution and sewage collection and transmission mains and pump stations appurtenant to such force mains.

_____
Signature

_____
Printed Name

_____
Title Date

PROCEDURE 7
EASEMENTS FOR ECUA UTILITIES

PURPOSE

This procedure establishes the process for acceptance of an easement by the ECUA.

I. GENERAL

A. An easement is required for any water, sewer, or gas line which is not located in a public right-of-way, when said line is to be owned and maintained by the ECUA.

B. Easements may be conveyed to the ECUA by either of the following methods.
   1. Recorded Plat
   2. Utility Easement Form

C. ECUA may assist the developer in obtaining third-party easement(s) for secondary feed lines, by use of its governmental authority as provided by the Florida Statutes. Payment for acquisition of said easement(s) shall be the sole responsibility of the developer where the easement(s) is of primary benefit to the proposed development.

II. NEW CONSTRUCTION

A. When reviewing the construction documents for new construction, the ECUA Engineering Department will notify the Engineer-of-Record which lines will require an easement granted to the ECUA.

B. Upon completion of construction, no lines will be accepted by the ECUA until receipt of an easement approvable by ECUA's legal counsel or a copy of the recorded plat.

C. Recorded Plat
   1. When a recorded plat is used to convey the easement, the Engineer-of-Record may request in writing the ECUA to accept the lines subject to the plat recording at the completion of all other City/County required improvements.

   2. ECUA will tentatively accept the lines subject to:
      a. Recorded plat to be submitted within a specified

time, but not to exceed 3 months of date of acceptance.

b. ECUA's approval of easement as shown on plat (a preliminary copy may be submitted to the ECUA Engineering Department prior to recording for approval).

c. Service connections to lines may be made but no service accounts will be accepted by the ECUA.

3. If recorded plat is not received within specified time, the ECUA will notify the Engineer-of-Record that the lines are not accepted by the ECUA for maintenance and that no further service connection will be allowed.

4. The easement shall be clearly denoted on plat in relation to established benchmark or to the line itself.

D. Utility Easement Form

1. When a Utility Easement Form is used, it must be submitted to the ECUA Engineering Department for review.

2. The ECUA Engineering Department will forward copy to ECUA's legal counsel for review and approval.

3. The Utility Easement Form will be returned to the Engineer-of-Record for correction and/or revisions as determined by review and recording at County Courthouse.

4. Upon recording of easement, a copy will be returned to the ECUA before the line will be accepted.

III. ABANDONMENT OF PUBLIC RIGHT-OF-WAY

A. Utility Easement Form shall be used where a line is located in a public right-of-way which is to be abandoned.

B. The form must be approved by the ECUA and its legal counsel prior to the ECUA approving the abandonment.

C. The Utility Easement Form shall be recorded at the same time the abandonment is recorded at the Escambia County Courthouse.

IV. PHYSICAL REQUIREMENTS

A. Width
1. Where adjacent to a public right-of-way, a minimum width of 10 feet is required.

2. When not adjacent to a public right-of-way, a minimum width of 20 feet is required.

B. Easements shall be continuously between:
1. Right-of-way to right-of-way,
2. Right-of-way to easement, or
3. Easement to easement.

C. Easements should minimize corners, curves and other irregularities.

D. The ECUA may require additional area where maintenance of line or structures dictate.

V. STANDARD "UTILITY EASEMENT" FORM

A. All easements shall be on standard form.

B. The standard form consists of:
1. Information Sheet (1 page)
   a. Address of Property
   b. Type of Ownership
   c. Name of Owner
   d. Address of Owner

2. Easement (2 pages)

3. Signature and Seal (1 page)

C. Signature Sheet - use appropriate page based on type of ownership.

1. Individuals
   a. If married, both husband and wife must execute.
   b. Signatures must be notarized.

2. Corporations
   a. Must be signed by the president or chief executive officer, or

b. The easement must be accompanied by a resolution showing the authority of said officer to sign the easement on behalf of the corporation.

c. Include the corporate seal or signature of two witnesses.

d. Officer's signature must be notarized.

3. General Partnership
   a. Must be signed by a general partner.
   b. Must be signed by two witnesses.
   c. General partner's signature must be notarized.

4. Limited Partnership
   a. Must be signed by general partner.
   b. Must be signed by two witnesses.
   c. General partner's signature must be notarized.

EMERALD COAST UTILITIES AUTHORITY
UTILITY EASEMENT

Date: _____

Type: Individual _____ General Partnership _____

Corporation __X__ Limited Partnership _____

Name of Owner(s) _____

Address of Owner(s) _____

_____

Address of Property _____

_____

PREPARED BY: _____

_____
Emerald Coast Utilities Authority
P. O. Box 15311
Pensacola, Florida 32514-5311

PROPERTY APPRAISER'S I.D. NO.: _____

UTILITY EASEMENT

STATE OF FLORIDA
COUNTY OF ESCAMBIA

WHEREAS, _____, a corporation ("Grantor"), whose mailing address is _____ _____, is the owner in fee simple of and has the right to convey an easement over, sell and convey certain real property hereinafter described; NOW, THEREFORE,

KNOW ALL MEN BY THESE PRESENTS that Grantor, for and in consideration of $1.00 and other good and valuable consideration, in hand paid by the Emerald Coast Utilities Authority, a governmental body corporate and politic of the State of Florida ("Grantee"), whose mailing address is 9255 Sturdevant Street, Pensacola, FL 32514, the receipt of which is hereby acknowledged, does hereby grant, bargain, sell and convey unto Grantee, its successors and assigns, forever, the perpetual right and easement to enter upon, occupy and use the following described real property for the purpose of utility lines and all facilities and equipment necessary or convenient in connection therewith, together with the right to lay, bury, construct, operate, maintain, dig up and repair such lines, facilities and equipment from time to time, together with all rights and privileges necessary or convenient for full enjoyment and use thereof for the aforesaid purposes, including the right of ingress and egress thereto and therefrom. If no legal description is entered below, then the legal description shall be that description contained in the attached Exhibit "A" consisting of one (1) page, which is incorporated herein and made a part hereof by reference.

The Grantor and the Grantee intend that the Grantor convey to the Grantee an easement and all the above-mentioned rights and privileges pertaining thereto with respect to a certain utility line or lines and related facilities which have been accepted or which it is anticipated will be accepted by the Grantee. In the event of any discrepancy between the actual location of such line or lines and facilities and the above-mentioned legal description, the actual location shall control to the extent of such discrepancy and said legal description shall be deemed to have been modified so that the centerline of the property subject to this easement shall coincide with the centerline of said utility line or lines, and the Grantor for itself, its successors and assigns, agrees to execute such corrective instruments as the Grantee may request.

In executing the above easement, the Grantor and the Grantee hereby covenant and agree that the above described property shall not be used for any purpose inconsistent with the location, construction, operation and maintenance of utility lines and facilities.

The Grantor for itself, its successors and assigns, hereby covenants and agrees that no building or other permanent structure shall be erected over or upon the easement area. Easily removable improvements such as paving, may be constructed with the prior consent of the Grantee, and the Grantor for itself, its successors and assigns, hereby covenants and agrees to pay the cost of any repair or replacement of such improvements which may be required as a result of Grantee's uncovering any of its utility lines or related facilities or exercising any of the other rights granted.

To HAVE AND TO HOLD the same rights and easements unto the Grantee, its successors and assigns, forever.

IN WITNESS WHEREOF, the said corporation, in pursuance of due and legal action of its stockholders and Board of Directors, has executed these presents, causing its name to be signed by its _ President, and its corporate seal to be affixed hereto this _____ day of _____, 20___.

_____
A Corporation

[CORPORATE SEAL]

Signed, sealed and delivered
in the presence of:

_____ By: _____
(signature) (signature of grantor)

_____ _____
(name - printed or typed) (name - printed or typed)

_____
_____
(signature) (Title)

_____
(name - printed or typed)

STATE OF FLORIDA
COUNTY OF ESCAMBIA

The foregoing instrument was acknowledged before me this ____ day of _____, 20___, by _____,
(name of officer)
as _____ of _____,
(office) (name of corporation)
a Florida corporation on behalf of the corporation. He/She is personally known to me or has produced _____ as identification and did not take an oath.

_____
Notary Public
[NOTARY SEAL] My commission expires:_____

_____
(name - printed or typed)

EMERALD COAST UTILITIES AUTHORITY
UTILITY EASEMENT

Date: _____

Type: Individual _____ General Partnership __X__

Corporation _____ Limited Partnership _____

Name of Owner(s) _____

Address of Owner(s) _____

_____

Address of Property _____

_____

PREPARED BY: _____

_____
Emerald Coast Utilities Authority
P.O. Box 15311
Pensacola, Florida 32514-5311

PROPERTY APPRAISER'S I.D. NO.: _____

UTILITY EASEMENT

STATE OF FLORIDA
COUNTY OF ESCAMBIA

WHEREAS, _____, a general partnership ("Grantor"), whose mailing address is _____ _____, is the owner in fee simple of and has the right to convey an easement over, sell and convey certain real property hereinafter described; NOW, THEREFORE,

KNOW ALL MEN BY THESE PRESENTS that Grantor, for and in consideration of $1.00 and other good and valuable consideration, in hand paid by the **Emerlad Coast Utilities Authority**, a governmental body corporate and politic of the State of Florida ("Grantee"), whose mailing address is 9255 Sturdevant Street, Pensacola, FL 32514, the receipt of which is hereby acknowledged, does hereby grant, bargain, sell and convey unto Grantee, its successors and assigns, forever, the perpetual right and easement to enter upon, occupy and use the following described real property for the purpose of utility lines and all facilities and equipment necessary or convenient in connection therewith, together with the right to lay, bury, construct, operate, maintain, dig up and repair such lines, facilities and equipment from time to time, together with all rights and privileges necessary or convenient for full enjoyment and use thereof for the aforesaid purposes, including the right of ingress and egress thereto and therefrom. If no legal description is entered below, then the legal description shall be that description contained in the attached Exhibit "A" consisting of ___ (__) page(s), which is incorporated herein and made a part hereof by reference.

The Grantor and the Grantee intend that the Grantor convey to the Grantee an easement and all the above-mentioned rights and privileges pertaining thereto with respect to a certain utility line or lines and related facilities which have been accepted or which it is anticipated will be accepted by the Grantee. In the event of any discrepancy between the actual location of such line or lines and facilities and the above-mentioned legal description, the actual location shall control to the extent of such discrepancy and said legal description shall be deemed to have been modified so that the centerline of the property subject to this easement shall coincide with the centerline of said utility line or lines, and the Grantor for itself, its successors and assigns, agrees to execute such corrective instruments as the Grantee may request.

In executing the above easement, the Grantor and the Grantee hereby covenant and agree that the above described property shall not be used for any purpose inconsistent with the location, construction, operation and maintenance of utility lines and facilities.

The Grantor for itself, its successors and assigns, hereby covenants and agrees that no building or other permanent structure shall be erected over or upon the easement area. Easily removable improvements such as paving, may be constructed with the prior consent of the Grantee, and the Grantor for itself, its successors and assigns, hereby covenants and agrees to pay the cost of any repair or replacement of such improvements which may be required as a result of Grantee's uncovering any of its utility lines or related facilities or exercising any of the other rights granted.

To HAVE AND TO HOLD the same rights and easements unto the Grantee, its successors and assigns, forever.

7.5h

IN WITNESS WHEREOF, the said general partnership has executed these presents, causing its name to be signed by its General Partner this _____ day of _____, 20___.

_____
A _____ General Partnership

Signed, sealed and delivered in the presence of:

_____
(signature)

By: _____
(signature of General Partner)

_____
(name - printed or typed)

_____
(name - printed or typed)

_____
(signature)

_____
(Title)

_____
(name - printed or typed)

STATE OF FLORIDA
COUNTY OF ESCAMBIA

The foregoing instrument was acknowledged before me this _____ day of _____, 20___, by _____ (name of General Partner signing this easement), General Partner of _____ (name of partnership), a _____ (state) general partnership, on behalf of that partnership. He/She is personally known to me or has produced _____ as identification and did not take an oath.

_____
Notary Public
My commission expires:_____

[NOTARY SEAL]

_____
(name - printed or typed)

_____

EMERALD COAST UTILITIES AUTHORITY
UTILITY EASEMENT

Date: _____

Type: Individual __X__ General Partnership _____

Corporation _____ Limited Partnership _____

Name of Owner(s) _____

Address of Owner(s) _____

_____

Address of Property _____

_____

PREPARED BY: _____

_____
Emerald Coast Utilities Authority
P.O. Box 15311
Pensacola, Florida 32514-5311

PROPERTY APPRAISER'S I.D. NO.: _____

UTILITY EASEMENT

STATE OF FLORIDA
COUNTY OF ESCAMBIA

WHEREAS, _____, an individual ("Grantor"), whose mailing address is _____ _____, is the owner in fee simple of and has the right to convey an easement over, sell and convey certain real property hereinafter described; NOW, THEREFORE,

KNOW ALL MEN BY THESE PRESENTS that Grantor, for and in consideration of $1.00 and other good and valuable consideration, in hand paid by the **Emerald Coast Utilities Authority**, a governmental body corporate and politic of the State of Florida ("Grantee"), whose mailing address is 9255 Sturdevant Street, Pensacola, FL 32514, the receipt of which is hereby acknowledged, does hereby grant, bargain, sell and convey unto Grantee, its successors and assigns, forever, the perpetual right and easement to enter upon, occupy and use the following described real property for the purpose of utility lines and all facilities and equipment necessary or convenient in connection therewith, together with the right to lay, bury, construct, operate, maintain, dig up and repair such lines, facilities and equipment from time to time, together with all rights and privileges necessary or convenient for full enjoyment and use thereof for the aforesaid purposes, including the right of ingress and egress thereto and therefrom. If no legal description is entered below, then the legal description shall be that description contained in the attached Exhibit "A" consisting of one (1) page, which is incorporated herein and made a part hereof by reference.

The Grantor and the Grantee intend that the Grantor convey to the Grantee an easement and all the above-mentioned rights and privileges pertaining thereto with respect to a certain utility line or lines and related facilities which have been accepted or which it is anticipated will be accepted by the Grantee. In the event of any discrepancy between the actual location of such line or lines and facilities and the above-mentioned legal description, the actual location shall control to the extent of such discrepancy and said legal description shall be deemed to have been modified so that the centerline of the property subject to this easement shall coincide with the centerline of said utility line or lines, and the Grantor for itself, its successors and assigns, agrees to execute such corrective instruments as the Grantee may request.

In executing the above easement, the Grantor and the Grantee hereby covenant and agree that the above described property shall not be used for any purpose inconsistent with the location, construction, operation and maintenance of utility lines and facilities.

The Grantor for itself, its successors and assigns, hereby covenants and agrees that no building or other permanent structure shall be erected over or upon the easement area. Easily removable improvements such as paving, may be constructed with the prior consent of the Grantee, and the Grantor for itself, its successors and assigns, hereby covenants and agrees to pay the cost of any repair or replacement of such improvements which may be required as a result of Grantee's uncovering any of its utility lines or related facilities or exercising any of the other rights granted.

To HAVE AND TO HOLD the same rights and easements unto the Grantee, its successors and assigns, forever.

IN WITNESS WHEREOF, the Grantor has hereunto set (his, her their) hand(s) and seal this ____ day of _____ , 20___.

Signed, sealed and delivered
in the presence of:

_____
(signature)

_____
(name - printed or typed)

_____
(signature)

_____
(name - printed or typed)

By: _____
(signature of grantor)

_____
(name - printed or typed)

STATE OF FLORIDA
COUNTY OF ESCAMBIA

The foregoing instrument was acknowledged before me this ____ day of _____, 20___, by _____. He/She is personally known to me or has produced _____ as identification and did not take an oath.

[NOTARY SEAL]

_____
Notary Public
My commission expires:_____

_____
(name - printed or typed)

7.5c

EMERALD COAST UTILITIES AUTHORITY
UTILITY EASEMENT

Date: _____

Type: Individual _____ General Partnership _____

Corporation _____ Limited Partnership __X__

Name of Owner(s) _____

Address of Owner(s) _____

_____

Address of Property _____

_____

PREPARED BY: _____

_____
Emerald Coast Utilities Authority
P.O. Box 15311
Pensacola, Florida 32514-5311

PROPERTY APPRAISER'S I.D. NO.: _____

UTILITY EASEMENT

STATE OF FLORIDA
COUNTY OF ESCAMBIA

WHEREAS, _____, a limited partnership ("Grantor"), whose mailing address is _____ _____, is the owner in fee simple of and has the right to convey an easement over, sell and convey certain real property hereinafter described; NOW, THEREFORE,

KNOW ALL MEN BY THESE PRESENTS that Grantor, for and in consideration of $1.00 and other good and valuable consideration, in hand paid by the **Emerald Coast Utilities Authority**, a governmental body corporate and politic of the State of Florida ("Grantee"), whose mailing address is 9255 Sturdevant Street, Pensacola, FL 32514, the receipt of which is hereby acknowledged, does hereby grant, bargain, sell and convey unto Grantee, its successors and assigns, forever, the perpetual right and easement to enter upon, occupy and use the following described real property for the purpose of utility lines and all facilities and equipment necessary or convenient in connection therewith, together with the right to lay, bury, construct, operate, maintain, dig up and repair such lines, facilities and equipment from time to time, together with all rights and privileges necessary or convenient for full enjoyment and use thereof for the aforesaid purposes, including the right of ingress and egress thereto and therefrom. If no legal description is entered below, then the legal description shall be that description contained in the attached Exhibit "A" consisting of ___ (__) page(s), which is incorporated herein and made a part hereof by reference.

The Grantor and the Grantee intend that the Grantor convey to the Grantee an easement and all the above-mentioned rights and privileges pertaining thereto with respect to a certain utility line or lines and related facilities which have been accepted or which it is anticipated will be accepted by the Grantee. In the event of any discrepancy between the actual location of such line or lines and facilities and the above-mentioned legal description, the actual location shall control to the extent of such discrepancy and said legal description shall be deemed to have been modified so that the centerline of the property subject to this easement shall coincide with the centerline of said utility line or lines, and the Grantor for itself, its successors and assigns, agrees to execute such corrective instruments as the Grantee may request.

In executing the above easement, the Grantor and the Grantee hereby covenant and agree that the above described property shall not be used for any purpose inconsistent with the location, construction, operation and maintenance of utility lines and facilities.

The Grantor for itself, its successors and assigns, hereby covenants and agrees that no building or other permanent structure shall be erected over or upon the easement area. Easily removable improvements such as paving, may be constructed with the prior consent of the Grantee, and the Grantor for itself, its successors and assigns, hereby covenants and agrees to pay the cost of any repair or replacement of such improvements which may be required as a result of Grantee's uncovering any of its utility lines or related facilities or exercising any of the other rights granted.

To HAVE AND TO HOLD the same rights and easements unto the Grantee, its successors and assigns, forever.

IN WITNESS WHEREOF, the said limited partnership has executed these presents, causing its name to be signed by its General Partner this _____ day of _____, 20___.

_____
A _____ Limited Partnership

Signed, sealed and delivered in the presence of:

_____
(signature)

By: _____
(signature of General Partner)

_____
(name - printed or typed)

_____
(name - printed or typed)

_____
(signature)

_____
(Title)

_____
(name - printed or typed)

STATE OF FLORIDA
COUNTY OF ESCAMBIA

The foregoing instrument was acknowledged before me this ____ day of _____, 20___, by _____ (name of General Partner), General Partner of _____, (name of partnership), a _____ (state) limited partnership, on behalf of that partnership. He/She is personally known to me or has produced _____ as identification and did not take an oath.

[NOTARY SEAL]

_____
Notary Public
My commission expires:_____

_____
(name - printed or typed)

PROCEDURE 8
NEW PRODUCT APPROVAL

PURPOSE

This procedure establishes the process by which new products may be approved by ECUA for use within the system.

I. Definitions

A. NEW PRODUCTS - New or changed material or equipment whose specifications differ from that which is contained in "Construction Specifications and Details", and if approved would require the specifications to be changed by addition, deletion, or modification.

B. EQUAL - A new product that meets the existing specifications and desires approval on an "or equal" basis.

C. The ECUA Engineering Department will promptly issue a letter of "acceptability" or a letter of "denial" with an explanation.

II. "EQUAL" APPROVAL

A. The request for approval on an "equal" basis may be submitted by Developer, Engineer, Contractor, Distributor, or Manufacturer.

B. The request shall include:
1. Product specifications and data sheet.
2. Local availability and service.
3. References from other locations where used.
4. Descriptive narrative explaining why product is equal to specified product.

C. The ECUA Engineering Department will promptly issue a letter of acceptability or a letter of denial with an explanation.

III. CONDITIONAL APPROVAL

A. The request for "conditional approval" shall be submitted by a Developer, Engineer, or Contractor for use on a specific project to the Engineer-of-Record who will assemble all pertinent information prior to submitting the request for "conditional approval" to the ECUA Engineering Department. The information, in duplicate, shall include, but not be limited to the following:

1. Product specifications and/or data sheet.
2. Analysis of how it differs from ECUA specifications.
3. Evaluation of its functional ability.
4. Economic justification for use.
5. Local availability and service.
6. References from others who have or do use.

B. The ECUA Engineering Department will promptly make an evaluation of submitted information, sending a copy to the responsible operating department. The response to the Engineer-of-Record will be a letter as follows:

1. A favorable response would authorize the new product to be used on the specific project as requested, and may contain some conditions, such as specific testing or inspections; and a time frame for full acceptance with inclusion in specifications.

2. An unfavorable response could be a rejection or merely a request for added information and will contain an explanation.

C. If a "conditional approval" is given in III.B.1., it will be for a specific project only and each time it is requested to be used a new approval must be obtained until the time or testing period previously established has been met. At that time a request for "final approval" may be submitted. Response to follow:

1. A letter of "final approval" will be issued if after review of available information which may include additional inspections or testing, it is determined that inclusion in ECUA specifications is warranted.

2. A letter of rejection or continuation of conditional approval will be issued if the results of V., A. would so indicate.

D. If "final approval" has been issued as in III.C.1., the appropriate sections of "Construction Specifications" will be revised and available for the next edition of the Manual.

PROCEDURE 9
CHANGE ORDERS

PURPOSE

This procedure establishes steps for implementing and processing change orders of ECUA funded projects.

I. Initiation

A. Change Orders will be required for any additions, deletions or revisions in the work as contracted and previously approved that affect function, costs or time. The Engineer-of-Record may authorize minor changes in the work which are consistent with the overall intent of the contract documents.

B. Change orders may be initiated by the Contractor, Engineer-of-Record or the ECUA, but it will be the Engineer-of-Record's responsibility to complete the required form and obtain approvals as necessary.

II. Submittals

A. Change orders will be submitted to the ECUA Engineering Department using ECUA Change Order Form E 2.1. The form shall be carefully completed, making sure to include justification of changes. The following attachments should be included when appropriate:

1. Basis for costs (increases, decreases or balance)

2. Revised plans

3. Catalogue cuts or data sheets (equipment)

4. Other support documentation

B. Upon receipt, the ECUA Engineering Department will promptly review the requested changes with due regard toward functional compatibility with other systems and budgeting constraints.

III. ECUA Action

A. Action to be taken by the ECUA Engineering Department:

1. Approve as submitted. ECUA Executive Director or his

designee will sign at appropriate place and the copies will be returned to Engineer-of-Record for distribution.

2. Hold for additional information, by requesting in writing required clarification and/or supporting documents.

3. Reject with explanation back to Engineer-of-Record.

B. When change order is fully approved and signed, a copy will be distributed to all participating parties and become a part of the project documents. Subsequent progress pay requests and/or final pay request will so reflect the changes as will the "as-built" drawings.

NOTE: Change Orders in excess of $4,999 require ECUA Board approval.

CHANGE ORDER

PROJECT _____ No. _____
_____ ECUA Project No. _____ Date _____

The Contractor, _____
is hereby ordered to make the following changes from the plans and specifications or do the extra work on your contract dated _____.
The adjustment in compensation that will be due the Contractor by reason of these changes will be made on the following basis:

ITEM NO.	ITEM	UNIT PRICE	AMOUNT	
			INCREASE	DECREASE
		TOTAL		

Original contract amount: $ _____
Total increase/decrease of previous change order: $ _____
Total increase/decrease this change order: $ _____
Revised contract amount: $ _____

Contract completion date is increased/decreased ____ days to _____.

SIGNATURES

Contractor: _____ Date: _____

Engineer: _____ Date: _____

Owner: _____ Date: _____

(Attach justification for change orders)

PROCEDURE 10
PAY REQUEST SUBMITTALS

PURPOSE

This procedure establishes steps for processing pay requests or invoices for progress or final payment of an engineering service or construction contract with the ECUA.

I. Engineering Service Payment Request

Engineering Service Payment Requests will be submitted to the ECUA Engineering Department in duplicate on the Engineer's letterhead or normal invoice and shall show:

A. Project Title and/or Description
B. Project Number (ECUA and Engineer's)
C. Chargeable Elements from Contract with Dollar Amounts
D. Accumulative Charges for Each Element
E. Accumulative Total Charges
F. Retainage as Stipulated in Contract, Percentage and Dollar Amount
G. Accumulative Amount Due This Request
H. Accumulative Previous Payments
I. Net Amount Due This Request
J. If it is not clear from (C) and (D), a brief description and breakdown of the work and charges for current period will be included. (Separate Page).

II. Construction Contracts

A. Construction contracts with Consulting Engineer acting in the capacity of "Engineer".

1. The Contractor will submit to the "Engineer" in triplicate on the Contractor's letterhead or normal invoice, the request for payment and shall show:

a. Project title and/or description
b. Project number (ECUA and Engineer's)
c. Accumulative total charges
d. Retainage as stipulated in contract, percentage and dollar amount
e. Stored material for which payment is requested
f. Accumulative amount due this request
g. Accumulative previous payments
h. Net amount due this request
i. In addition, the Contractor will supply the

following additional information:

(i) For a unit price contract or a lump sum contract with required itemization of project elements: Complete a detail "Periodic Estimate for Partial Payment" form such as form HUD-4207.

(ii) For a lump sum contract without itemization requirement, a brief description of work completed during the current period will be included on a separate page.

2. The Engineer upon receipt, and within the time allowed by Contract, will carefully review the Contractor's request as to accuracy and the reasonableness of the estimates.

3. The payment request may be returned to Contractor if review indicates inaccurate and incorrect estimates.

   a. The Engineer will then transmit the above to the ECUA Engineering Department with his recommendation.

   b. Any minor corrections or changes will be worked out with Contractor before forwarding to ECUA.

   c. Any significant corrections or changes will necessitate a rejection back to Contractor with copy to ECUA.

B. Construction Contracts with the ECUA, Engineering Department acting as "Engineer".

1. The Contractor shall submit directly to ECUA Engineering Department the same information as noted in II., A., 1. above.

2. The Engineer upon receipt and within the time allowed by Contract, will carefully review the Contractor's request as to accuracy and the reasonableness of the estimates.

3. The payment request may be returned to Contractor if review indicates inaccurate and incorrect estimates.

III. Review

The ECUA Engineering Department upon receipt of an approvable pay request:

A. Will prepare an internal Voucher to be submitted to Finance through the Engineering Department Director. The Voucher in addition to stating the amount and to whom to be paid, will make reference to budget authorization, ECUA Board authorization and the time frame in which payment must be made in accordance with the Contract.

B. Any minor corrections or changes will be worked out with the Engineer or Contractor prior to vouchering.

IV. Final Pay Request

In addition to requirements previously stipulated, final payment requests must include: 1) Release of Lien and 2) Warranties; properly executed.

DESIGN STANDARDS

FORWARD

The following standards are intended as a guide to the design engineer in the preparation of plans for water and wastewater improvements. While the design standards given are intended as minimum design criteria, it is recognized that there may be individual instances where a less stringent criteria may be approved without affecting the integrity of the system. An example would be the use of a water main less than 6-inch diameter to serve a cul-de-sac where adequate fire protection is available and a short dead end line is acceptable. The ECUA Engineering Department will consider deviations from these standards on a case-by-case basis.

SECTION 101

PLAN PREPARATION STANDARDS

PART 1: GENERAL

1.01 All plans submitted to ECUA for review shall comply with these standards for preparation.

1.02 The design shall be shown in sufficient detail to insure the intended construction. Anticipate problems and design a solution. All work shall be constructed in accordance with the latest edition of ECUA's Standard Specifications.

1.03 The plans shall be clean, legible, and free from smudges. Any plans which cannot readily be read will be rejected.

PART 2: PLAN MAKEUP

2.01 General:

A. All plans shall be submitted on standard engineering sheets of 24 inch by 36 inch.

B. Lettering shall be of appropriate size.

C. Plan sets shall consist of:
1. Cover sheet
2. Location map
3. Project map
4. Design sheets
5. Detail sheets

D. All design and detail sheets shall have the following note in the upper right hand corner: "All work shall be constructed in accordance with the _____ edition of ECUA's Standard Specifications".

E. Title block to be shown on all sheets except cover sheet, and shall include:
1. Project name
2. Sheet title
3. Engineer
4. Date prepared
5. Date revised
6. Sheet number (sequential)

2.02 Cover Sheet to Include:

A. Project Title.

B. Identify ECUA and list Board members at time of bidding. (ECUA funded projects only).

C. Developer and Engineer or Engineer.

D. Project Number or Identification.

E. Type of Project (if not clear in title).

F. Date(s) of Design or Submittal and Subsequent Revisions.

2.03 Location Map Shall Include:

A. Map of project area and area surrounding to easily identify location of project (minimum of 1/2 mile radius) at a scale of 1 inch = 1000 ft (min.), show graphically.

B. North arrow (north to be between 0° and 90°).

C. Title Block.

2.04 Project Map Shall Include:

A. Map of project at 1 inch = 200 feet or other appropriate scale as approved by Director of Engineering. Show graphically.

B. Index of Design Sheets in an appropriate manner.

C. North arrow (north to be between 0° and 90°).

D. General notes needed by field crew.

E. Title block.

F. Location map and Project map may be combined on single sheet if project size permits.

2.05 Design Sheets Shall Include:

A. North arrow (north to be between 0° and 90°).

B. Scale: show numerically and graphically, not less than 1 inch = 50 ft. horizontal 1 inch = 5 ft. vertical

C. Title block.

D. The following items will be shown on both Plan and Profile:

1. Pipe with size and material, to be installed.

2. Show and locate all appurtenances (bends, T's, X's, valves, hydrants, manholes, services, etc.)

3. At all road or paving crossing show if "opens cut" will be allowed; if not, show length, depth and size of pipe or casing to be bored or jacked.

4. Special notes for construction that are specific to that sheet.

5. Circle and reference items for which a detail is provided. Show on same sheet if possible; otherwise, see 2.06 below.

6. Bench mark - minimum one per sheet.

7. Match line with station for continued sheets.

8. Boring location and results (if available).

E. Plan view of project shall also include:

1. Stationing along centerline at 100 feet increments. May use survey baseline stationing if very close to pipeline. Restrict use of station equations.

2. Location of other utilities within 20 feet of project or that may otherwise conflict with project.

3. Poles, trees, structures, roads, etc. that may conflict with project.

4. Property lines, ROW lines, easements (both temporary and permanent), which are existing and proposed.

5. Topographical features, such as ditches, embankments, etc.

F. Profile View of Project Shall Also Include:

1. Ground surface elevation as existing and as final if different.

2. Type and depth of underground utilities and other features that will be crossed or that might otherwise cause a problem.

3. Ground water elevations if known.

4. Stream or water crossings with stream bed elevations and the normal and extreme high and low water levels.

2.06 Detail Sheets: Shall be used when necessary for clarity of work and will include:

A. Appropriate Scale
B. Label
C. Elevations
D. Dimensions
E. Other Information as Appropriate
F. Title Block

PART 3: SPECIAL REQUIREMENTS

3.01 Water plans shall also clearly identify the intended depth of cover at least twice on each sheet.

3.02 Wastewater plans shall also clearly identify:

A. The invert of each pipe in each manhole.

B. The calculated slope of each section.

C. The final rim elevation of each manhole and the type rim if other than standard (locking, waterproof, etc.).

D. The size (inside diameter) of each manhole and anything special, such as drop (inside or outside), shallow (flat top), etc., if different than standard size.

SECTION 556 - POTABLE WATER SYSTEM DESIGN STANDARDS

PART 1: GENERAL

1.1 GENERAL

All potable water distribution systems which are to be extensions to the ECUA system shall be designed and constructed in accordance with these Standards. Potable water distribution systems include transmission and distribution mains, service lines, valves, fire hydrants, meters and other appurtenances. Water system materials, installation, and construction methods and procedures shall be in accordance with current ECUA Specifications. Technical Specifications for Water Transmission, Distribution and Service Lines are included in Section 2556 of this Manual.

1.2 MINIMUM REQUIREMENTS

Proposed extensions to the water distribution system shall be considered minimum requirements, unless otherwise noted. The Design Standards outlined in this Manual are intended to provide an adequate supply of potable water to consumers, and fire protection at all times, at pressures and flows as required by Code.

All proposed system expansions shall be compatible with the Water Master Plan as maintained and amended by ECUA.

1.3 DEVIATIONS

Deviations from these Standards may be allowed by ECUA upon a finding by ECUA that, in accordance with sound engineering principles, the granting of the deviation will not result in an increase in the likelihood of a system failure. Proposed deviations shall be clearly noted on the Construction Plans and explained in an Engineering Report prepared by the Engineer-of-Record. Subsequent approval of proposed deviations from these Standards is at ECUA's sole discretion.

PART 2: OTHER STANDARDS

2.1 GENERAL

ECUA's Potable Water System Design Standards may differ from the requirements of other local, state, and federal agencies. The more stringent requirement shall apply.

2.2 FEDERAL AGENCIES

The governing Standards of federal agencies such as the Environmental Protection Agency, and the U.S. Public Health Service shall be followed when applicable.

2.3 STATE AGENCIES

The potable water distribution system shall conform to the applicable Florida Departments of Environmental Protection and Health and Rehabilitative Services statutes, policies, standards, rules, and regulations for public water systems.

2.4 PLUMBING CODES

The provisions of the Plumbing Code of the City of Pensacola or Escambia County as they pertain to water supply and distribution, service locations and materials, and backflow prevention devices, except as provided for elsewhere in this Manual, shall apply.

PART 3: WATER DISTRIBUTION SYSTEM DESIGN STANDARDS

3.1 FLOW REQUIREMENTS

In sizing extensions to the water distribution system, the minimum required design flow shall be the sum of the required fire flow plus two-thirds (2/3) of the required domestic flow.

A. Required Domestic Flow

1. Required flow for domestic use in residential areas shall be in accordance with the following table:

TABLE 556.1 - REQUIRED DOMESTIC WATER SUPPLY

	MINIMUM SUPPLY, GPM PER DWELLING UNIT					
MAX. NO. DWELLING UNITS	SINGLE FAMILY DETACHED	MULTI-FAMILY		MOBILE HOMES		RETIREMENT SINGLE FAMILY
		2 BDRM	1 BDRM	2 BDRM	1 BDRM	2 BDRM (MAX)
50	4.0	3.6	3.4	3.2	3.0	2.6
100	3.0	2.7	2.6	2.4	2.3	2.0
200	2.0	1.8	1.7	1.6	1.5	1.3
200+	1.5	1.4	1.3	1.2	1.1	1.0

NOTE: **Multi-family, mobile home, or retirement units consisting of more than 2 bedrooms shall be considered as single-family detached.**

2. The required flow for commercial, industrial, or other nonresidential areas shall be as determined by the Engineer-of-Record and approved by the ECUA for each specific instance. ***NOTE***: Fixture Values as contained in the Southern Standard Building Code Chapter XIII, Section 1304 may be used as a guide.

B. **Required Fire Flow**

1. The required design fire flow for residential areas shall be 600 gpm for each hydrant flowing individually with a minimum residual pressure of 20 psig.

2. The required fire flow for areas other than residential shall be as determined by the appropriate governing authority.

3. ECUA will, on request, provide the designer with available system data.

3.2 GRID SYSTEM LAYOUT

A. **Grid System**

All mains shall be interconnected to form a grid system. Six-inch mains shall be placed to form grids of 1,000 feet x 1,000 feet or less. In no case should 6-inch mains be installed such that there is more than 1,320 feet of line between grid interconnections unless authorized by the ECUA. Eight-inch mains shall form grids no greater than 4,000 feet x 8,000 feet. When larger grids are necessary, larger diameter pipes shall be used. Four-inch mains may also be used to form localized grid interconnections where appropriate.

B. **Dead-Ends**

If the installation of a "dead-end" main cannot reasonably be avoided, its dead-end length shall not exceed 1,000 feet unless authorized by the ECUA. All dead-end mains shall have a permanent flushing hydrant with provision for future ties into adjacent properties in accordance with Section 3.2E below, when appropriate.

C. **Single Connection**

A development to be supplied by the ECUA water system, and designed for no more than 25 single family dwellings, may have a single connection to the distribution system if connecting to a larger main. If connection is to an equal size or smaller main, then a multiple connection will be required in accordance with Section 3.2 D.

D. **Multiple Connection**

A development to be supplied by the ECUA water system and designed for more than twenty-five single family dwellings, shall have two (2) or more connections to the distribution system. A single connection may be made by using a pipe diameter sufficient to provide one and one-half (1-1/2) times the required flow with provisions for future connections, provided approval of the ECUA is obtained.

E. **Future Interconnections**

Provisions for future connecting mains shall be made by extending construction of all water mains to the exterior boundaries of the development wherever future connections to adjacent properties are anticipated or are required to form a grid system.

3.3 WATER LINE SIZING

Distribution mains shall be of sufficient size to furnish the required flow at pressures and velocities as herein provided. Mains shall be located to provide service to each metered unit within a development and to form a looped network as provided above.

A. **Required Pressure**

The system shall be designed such that the water pressure at all points in the distribution system shall not be less than 35 pounds per square inch with no fire hydrant in use. Water pressure in the main at ground level shall not be less than 20 pounds per square inch under all conditions, inclusive of fire flows.

NOTE: When the water pressure exceeds 80 pounds per square inch, there shall be installed and maintained by the customer, on the property side of the water meter, an approved pressure regulator in conformance with the Southern Building Code and other applicable codes.

B. **Standard Sizes**

Distribution mains used shall have nominal diameters of 2, 3, 4, 6, 8, 12 and 16 inches.

C. **Minimum Main Size**

Minimum distribution main diameter shall be 4 inches in single family residential areas where fire hydrants are not required, and 6 inches in all other areas. Exception: 3-inch mains may be used around cul-de-sacs serving no more than 10 residences, and 2-inch mains may be used for cul-de-sacs serving no more than 4 residences.

D. **Velocity**

Velocities of water for the non-fire flow conditions in the distribution mains shall not exceed 6 feet per second.

TABLE 3.3 - APPROXIMATE CAPACITIES AND HEAD LOSS OF PIPES @ MAXIMUM DESIGN VELOCITY

Size	Flow (gpm) at 6 fps	Head Loss C900 Pipe (c=130) ft/1000 ft	psi/1000 ft
4"	235	39	17
6"	530	22	10
8"	950	15	6.5
12"	2100	10	4
16"	3700	7	3

3.4 WATER LINE PLACEMENT

A. **Location**

All mains to be accepted by ECUA shall be installed only in dedicated streets, alleys, public right-of-ways, utility easements, or on land owned by ECUA.

B. **Alignment**

Water mains shall be designed to be parallel to the adjoining pavement and/or right-of-way line to the extent practical. In order to keep the main within its desired alignment within the right-of-way or easement, the main may be deflected, or may require standard fittings. Standard fittings are available as 11¼-degree, 22½-degree or 45-degree bends. Joint deflection should be used in preference to fittings.

1. **Deflection**

Deflections of 1 to 5 degrees may be permitted with standard or special pipe joints in accordance with the manufacturer's specifications. Deflections should be made as small as possible at successive joints.

2. **Curving**

Curving of pipe may be permitted in lieu of standard fittings or joint deflection in small diameter pipes (3-inch and less). The radius of the pipe curve shall be not less than 40 feet for 2-inch pipe and 58 feet for 3-inch pipe.

C. **Depth**

1. **General**

Water lines shall be designed to provide a minimum of 30 inches of cover below proposed finish grade. Valves shall be designed for installation at depths not greater than 48 inches below finish grade. Deviations from the required minimum cover may be allowed where conditions require, subject to prior approval of ECUA.

Water lines shall not be installed at depths greater than 36 inches below proposed finish grade, unless otherwise permitted by these Standards. Deviations from the required maximum cover may be allowed where conditions require, subject to prior approval of ECUA.

2. **Roadway Crossings**

a. Water line installation in public rights-of-way shall conform to all applicable requirements of the governing agency responsible for the maintenance and operation of the roadway.

b. In cases where open-trench construction of roadway crossings is allowed, water lines may be installed without casing, using an appropriate, approved pipe material in accordance with ECUA's Technical Specifications.

c. In cases where open trench construction of roadway crossings is not allowed, water lines shall be installed in a steel casing in accordance with Section 2224 of ECUA's Technical Specifications. An appropriate, approved pipe material meeting the requirements of ECUA's Technical Specifications shall be installed in the casing. In cases where the length of casing required is excessive, or in other circumstances where conditions warrant, valves may be required on both sides of the casing.

3. **Water Crossings**

a. Water line installation involving construction under or across water shall conform to all applicable requirements of the governing agency, or agencies, having jurisdiction for such activities.

b. Creek, stream, river, or wetlands crossings not exceeding 100 feet in length as determined by the 100-year flood plain, and where open trenching is permitted, shall be constructed using ductile iron pipe (or other approved equal) at a depth not less than 36 inches below the bottom surface of the crossing. The ductile iron pipe shall extend at least 20 feet beyond either side of the maximum width of the crossing.

c. Major streams and other crossings where the 100-year flood plain will create a width at the point of crossing of 100 feet or more, and where open trenching is permitted, shall be constructed using ductile iron river crossing pipe (or other approved equal) at a depth not less than 36 inches below the bottom surface of the crossing The ductile iron pipe shall extend at least 20 feet beyond either side of the maximum width of the crossing, with valves on each side beyond the flood plain.

d. Water lines installed under crossings where open trenching is not permitted shall be installed in a steel casing in accordance with Section 2224 of ECUA's Technical Specifications. Directional boring, where an appropriate pipe material is installed under the waterway without disturbance to the ground or water surface, may be considered in some circumstances. See Section 2234 of ECUA's Technical Specifications for further information.

e. Where an existing or proposed bridge crosses the waterway at the same location as the proposed water line, provision should

be made to attach the water line to the bridge structure. Prior consent must be obtained from the agency responsible for the maintenance and operation of the bridge. Design of pipe restraints for the bridge attachment shall allow for limited movement of the pipe as a result of expansion and contraction.

4. **Railroad Crossings**

   a. Water line installation involving construction under railroads shall conform to all applicable requirements of the governing agency, or agencies, having jurisdiction for such activities.

   b. Railroad crossings of any length shall be installed in a steel casing in accordance with Section 2224 of ECUA's Technical Specifications, or in accordance with any special requirements of the railroad company, whichever is more strict.

5. **Other Crossings**

   a. Water lines which must be installed under existing obstructions, such as pipes or conduits, shall maintain a vertical separation of at least 6 inches. In cases where a minimum separation of at least 6 inches cannot be maintained, or in any case where there is a potential threat to the integrity of the water line as a result of an existing obstruction, the pipe shall be installed in a steel casing in accordance with Section 2224 of ECUA's Technical Specifications. Alternatively, Ductile Iron or C900 DR18 pipe shall be used. These special provisions shall extend at least 10 feet on either side of the pipe or obstruction being crossed.

   b. Water lines installed within easements for the purpose of extending or looping the system shall be constructed with Ductile Iron pipe through the entire length of the easement. Valves shall be installed at both ends of the line, unless otherwise approved by ECUA.

D. **<u>Separation of Potable Water Lines From Sanitary Sewer Lines</u>**

1. When a potable water line must cross over a gravity sewer line with less than 18-inch vertical clearance, one of the following methods may be used to protect the water line:

   a. Fully encase the sewer line with a minimum of four inches of concrete (Fy = 2500 psi min.) for a minimum distance of ten feet on either side of the point of crossing. The point of crossing must be at least five feet from a water line joint. If the crossing

is other than at right angles, increase the length of encasement so that the end of the encasement will be at least ten feet from the nearest water line joint.

b. Use pressure pipe for the sewer line that is the same as or better than the water line being crossed; with joints no closer than 10 feet apart and at least 6 inches of vertical clearance.

c. Install sewer pipe in a 20-foot section of steel casing centered under the water line, so that each end of the casing will be at least 10 feet from the nearest water line joint. Seal the ends of the casing with non-shrink grout.

2. When a gravity sewer line must cross over a potable water line, regardless of the clearance (because the water line cannot be relocated above the sewer) use method 'b' or 'c' in subsection 1 above. Concrete encasement will not be allowed.

3. When a sanitary force main must cross under a potable water line with less than an 18-inch vertical clearance, or over the water line, use method 'b' or 'c' in subsection 1 above.

4. The above requirements do not apply when the water line being crossed is a house or building service 2 inches or smaller and the service is a continuous piece of PE DR9 tubing, located so that the distance to a sewer or force main joint is as great as possible.

5. When a gravity sewer line must run parallel to and less than 18 inches below a potable water line and:

   a. 6 to 10 feet apart for less than 40 feet, use method 'a', 'b' or 'c' in subsection 1 above.

   b. 6 to 10 feet apart for over 40 feet, use method 'b' and stagger joints.

   c. 3 to 6 feet apart for any distance, use a higher rated pressure pipe and staggered joints.

6. When a sanitary force main must run parallel to and less than 18 inches below a potable water line and:

   a. 6 to 10 feet apart for any distance, use a higher rated pressure pipe as in method 1 (b) above.

b. 3 to 6 feet apart, use C-900 DR18 pipe for both water and force main.

E. **Pipe Restraints**

All water line fittings and appurtenances shall be restrained. See Section 2556-2.4.1.4 for further information.

3.5 **APPURTENANCES**

A. **Valves**

General

In-line valves shall be spaced such that no more than 1,000 feet of pipe would be out of service with valves shut, and shall be located on every branch line, with at least one valve on the main line at the junction. The valve may be located on the opposite side of the street from the fittings, except in cases where a tapping sleeve and valve is used. Butterfly valves may be used on lines of 16 inches and larger. Air release valves shall be located on distribution mains as required by ECUA. Valves shall be installed in accordance with ECUA Standard Detail D-34.

B. **Fire Hydrants**

Fire hydrant location shall be governed by the local Life Safety Officer or Fire Department, but in general shall be located on a 6-inch or larger main, and no more than 1,000 feet apart along rights-of-way. Fire hydrants shall be located at intersections when practical, otherwise as close as practical to common property lines.

Fire hydrants shall be located in single family residential areas so that no more than 600 feet of fire hose, as laid along a public right-of-way, will be required to reach any proposed house.

Fire hydrants shall be located in multi-family residential or commercial areas, so that no more than 500 feet of hose, as laid across unobstructed terrain, will be required to reach the most remote part of any proposed building.

Fire hydrants may be installed on private land supplied by a private dedicated fire line of at least 6 inches diameter, and protected with an appropriate detector-check assembly located at the property line.

C. **Flushing Hydrants**

Flushing hydrants shall be located within a right-of-way or easement near lot/property corners such that their location and use will not be hampered by improvements (driveways, fences, shrubbery).

All dead-end lines 4 inches and smaller shall have at least a 2-inch post hydrant assembly.

All dead-end lines 6 inches and larger shall have a standard fire hydrant with valve. See ECUA Standard Detail D-35.

D. **Backflow Preventers**

(see Section 3.7 below)

E. **Double Check Detector Assemblies**

An appropriate double check detector assembly may be required in any private fire line.

F. **Meters**

Residential meters and meter boxes are typically provided by ECUA. Commercial water meters less than 2 inches in size are also typically provided by ECUA. For commercial water meters 2 inches and larger, the developer is required to supply the meter vault in accordance with ECUA Standard Detail D-25 or D-26 as applicable.

3.6 SERVICE LINES:

A. Potable Water Services

1. General

Line size must be selected with due consideration for length, peak demand, elevation and pressure loss, including loss across backflow preventers, for the anticipated end use(s). A water meter of the size requested by the customer will be supplied and installed by the ECUA at each connection point. The meter size should be shown on the plans for all commercial developments. Refer to Table 3.6 for tubing size.

All meters shall be installed in boxes adjacent to the property line at the public right-of-way or easement and readily accessible to ECUA meter readers. Meter boxes shall not be located in driveways or where they might be obstructed by landscaping or other structures, or closer than five feet to the sanitary sewer service lateral.

TABLE 3.6
RECOMMENDED TUBING SIZE FOR WATER SERVICES

Size of Meter	Max. Flow (gpm)	Max. Pressure Loss (psi)	Max. Length of Tubing for Size Indicated		
			1"	1-1/2"	2"
5/8"	20	10	92	661	2679
1"	50	10	17	121	492
1-1/2"	100	10	-	34	136
2"	160	10	-	14	57

2. Residential

Provision shall be made for individual service lines to each lot within all residential developments. Services should be located centrally on each lot. See ECUA Standard Detail D-21. Duplex water services will not be permitted except in the case of a zero-lot-line townhouse-type development where common lot lines are clearly established.

3. Commercial

Service connections to industrial or commercial lots may be omitted if the service size cannot be predetermined, provided approval is obtained and paving will not have to be cut when installation is required.

Master meters are required for shopping centers, malls and similar developments. Exceptions may be made when a beneficial part of the Distribution System runs through the development.

A master meter is required for a wholesale customer, where water is to be distributed to individual units through private lines and that development is not served by the ECUA wastewater system.

Master meters shall be used for apartment, condominium and other such complexes.

B. **Fire Service Lines**

1. ECUA will provide a fire line service at the customer's expense, provided that there is adequate existing capacity.

2. ECUA will accept for operation and maintenance only such portions of the fire line within a public right-of-way or in an easement.

3. An approved backflow preventer shall be installed by the customer at his expense adjacent to the property line. (See Section 3.7 below.)

4. All fire line services shall be pressure tested and chlorinated up to the backflow preventer in the same manner as other line extensions.

C. **Irrigation Service Lines**

Provision shall be made for separate irrigation services and meters to be installed at customer's expense, if required.

3.7 CROSS CONNECTION CONTROL AND BACKFLOW PREVENTION

A. **Protective Devices**

Backflow prevention devices shall be installed to protect the distribution system from potential contamination.

B. **Where Required**

1. **Single Family Residential** - Backflow prevention devices shall be installed by owner in accordance with the Standard Plumbing Code - latest edition.

2. **Commercial** - Backflow prevention devices shall be installed by owner for all services.

3. **Irrigation Services** - Backflow prevention devices shall be installed by owner in accordance with the Standard Plumbing Code - latest edition.

C. **Type of Protective Device**

1. The selection of an appropriate protective device will be based on the degree of hazard involved. However, the ECUA shall retain the final decision in individual cases. Refer to ECUA Code, Chapter 5, "Cross-Connection Control." All devices must be approved for use in potable water service by one or more of the following: NSF, ANSI, ASSE, UL.

   a. **Air-Gap Separation Backflow Prevention Device**: will be used in any high-risk installation, but is acceptable in all situations described in this section.

   b. **Reduced Pressure Principle Backflow Prevention Device**: will be used in any moderate to high-risk installation.

   c. **Double Check Valve Assembly**: will be used in any moderate-risk installation, which will include most private fire lines, and private fire hydrants.

2. The type of backflow device shall be shown on the Construction Plans.

3. Bypasses around backflow devices are expressly prohibited.

4. A low flow detector meter may be required on any backflow device located on an unmetered water line.

D. **Location**

1. All backflow prevention devices are to be located immediately after the meter or immediately inside the property line at the right-of-way line, and be readily accessible for inspection and visible from the public right-of-way.

2. All backflow prevention devices are to be located above the 100-year flood elevation or a minimum of 18 inches above ground, whichever is higher, and should be protected from freeze and traffic.

3. Any deviation from No. 1 above must be individually approved by the ECUA.

4. The location of the backflow device is to be shown on the Construction Plans for all commercial developments.

E. **Installation**

Installation of the backflow device will be done by the Developer's Contractor. See ECUA Code, Chapter 5, "Cross Connection Control."

F. **Inspection and Testing**

Inspection and testing of the backflow device will be conducted by the ECUA as outlined in ECUA Code, Chapter 5, "Cross Connection Control."

SECTION 570

DESIGN STANDARDS SANITARY/GRAVITY WASTEWATER COLLECTION SYSTEM

PART 1: GENERAL

1.1 General Description of Work

A. The following minimum requirements are considered acceptable to the ECUA in the design of collection systems for wastewater from domestic and commercial customers.

Deviations from these standards may be allowed by ECUA only upon a finding by the ECUA that, in accordance with sound engineering standards, the granting of the deviation will not work to increase the likelihood of a system problem. No deviation will be allowed unless it is approved in writing by ECUA and is clearly noted on the approved construction plans.

B. All expansion shall conform to the "Master Plan for Wastewater" as maintained and amended by the ECUA.

C. When these standards differ from state and/or federal requirements, the more stringent requirement shall apply.

D. The collection system for wastewater includes the gravity mains, manholes, customer service pipes, lift stations, force mains, and other appurtenances. The system should be designed to provide for the collection of wastewater from the customer and for its safe and economical transport TO ECUA's Wastewater Reclamation Facilities.

PART 2: STANDARDS

2.1 U.S. Environmental Protection Agency and U.S. Public Health Service

The governing standards of these agencies will be followed when applicable.

2.2 State of Florida Department of Environmental Protection

The wastewater collection system shall conform to the applicable Florida State Department of Environmental Protection laws, policies, standards, and rules and regulations for public wastewater collection systems.

2.3 Plumbing Codes

The provisions of the Plumbing Code of the City of Pensacola or Escambia County as it pertains to sanitary wastewater collection, service line locations and materials, and on-site plumbing , except as provided for elsewhere in these criteria, shall apply.

2.4 Escambia County Utilities Authority

All wastewater collection systems that are to become a part of the ECUA system shall be designed and constructed in accordance with these standards. Materials, installation of materials, and construction methods and procedures shall be in accordance with the current ECUA material and installation specifications. Refer to Section 2570 of the Technical Specifications of the ECUA Engineering Manual. All discharges into the ECUA sewer system shall meet the requirements of the ECUA Code.

PART 3: DESIGN STANDARDS FOR SANITARY COLLECTION SYSTEMS

3.1 Flow Requirements

In sizing the collection system gravity mains, the required design flow shall be the sum of the required sanitary flow as contained below, plus an allowance for infiltration and inflow.

A. Required Sanitary Flow (Residential)

Required average daily flow for sanitary use in residential areas shall be based on 350 gallons per day per unit (100 gpcpd x 3.5 persons) or as approved by the ECUA.

B. Required Sanitary Flow (Nonresidential)

The required flow for commercial, industrial, or other nonresidential areas shall be as determined by the Engineer and approved by the ECUA for each specific instance.

C. Required Allowance for Inflow and Infiltration

The required allowance for infiltration and inflow for developed areas shall be in accordance with the following table: (based on 25 gal/inch dia./mile/day for new construction).

Pipe Diameter (Inches)	Min. Allowance I&I Flow (GPD/1000 Feet)
8	38
10	47
12	57
15	71

3.2 Future Interconnections

Provisions for future connecting mains shall be made by providing appropriate easements and/or extending construction of all wastewater mains to the exterior boundaries of the subdivision or development wherever future connections to adjacent subdivisions or lots are anticipated.

3.3 Gravity Collection Mains

Gravity mains shall be of sufficient size to carry the required flow at velocities as herein provided. Mains shall be located to provide service to each lot within a development as herein provided. All mains shall be installed only in dedicated streets, alleys, public rights-of-way or utility easements, in favor of the ECUA for the use and benefit of the ECUA.. All main locations and sizes shall be in accordance with the ECUA's current "Master Plan for Works Improvements" and the approved subdivision master development plan and utility layout.

A. Minimum and Standard Main Size

Minimum gravity main diameter shall be 8 inches in all areas. Standard sizes of gravity mains used shall have nominal diameters of 8 inches, 10 inches, 12 inches, 15 inches, 18 inches, 21 inches, 24 inches, 30 inches, and 36 inches.

B. Slopes shall be designed with a hydraulic gradient sufficient to prevent deposition of solids, by developing a minimum velocity of 2.0 feet per second as computed using Manning's formula and a "n" value of not less than .013 while flowing full. The following table establishes the minimum allowable slopes for various size pipes:

1. Minimum slope allowable shall be:

Pipe Size Inches	Minimum Slope %
8	.4
10	.28
12	.22
15	.15
18	.12
21	.10
24	.08
30	.06
36	.05

Under special conditions, if full and justifiable reasons are given, slopes slightly less than those required for the 2 feet per second (0.61 m/s) velocity when flowing full may be permitted. Such decreased slopes will only be considered where the depth of flow will be 0.3 of the diameter or greater for design average flow. Whenever such decreased slopes are selected the engineer must furnish with his report his computations of the depths of flow in such pipes at minimum, average, and peak rates of flow. It is recognized that such flatter grades may cause additional sewer maintenance expense and odor nuisance. The selection of the size of pipe shall be determined on the basis of the most desirable flow characteristics obtainable. The owner of the sewer system will give written assurance to the appropriate reviewing agency that any additional sewer maintenance required by reduced slopes will be provided.

2. In the case of sewers where the slope and volume are such that velocities will exceed 10 feet per second (3.0 m/s) at average flow, special provision

shall be made to protect against erosion. This protection may be secured utilizing C900 PVC, ductile iron, steel pipe or equivalent, when approved in writing by the ECUA.

a. Where velocities greater than 15 feet per second (4.6 m/s) are anticipated, special provision shall be made to protect against displacement by erosion and shock.

b. Sewers on 20 percent slopes or greater shall be anchored securely with concrete anchors or equal, spaced as follows:

1) Not over 36 feet (11 m) center to center on grades 20 percent and up to 35 percent;

2) Not over 24 feet (7.3 m) center to center on grades 35 percent and up to 50 percent; and

3) Not over 16 feet (4.9 m) center to center on grades 50 percent and over.

3. Full advantage of suitable topography and paralleling of ground slopes shall be made. Minimum slopes should only be used when necessary, particularly with 8-inch pipe. When depth exceeds 10 feet, check pipe class for strength, and/or specify stricter bedding requirements.

4. Sewers shall be designed and laid with a uniform slope between manholes.

C. Change in pipe size shall not occur between manholes

1. Increasing Size. When a smaller sewer joins a larger one, the invert of the larger sewer shall be lowered sufficiently to maintain the same hydraulic gradient. The crowns of pipes shall be at the same elevation within the manhole.

2. Decreasing Size. At times, due to increasing sewer slopes, a reduction in the size of the outgoing sewer from a manhole may be justified. Such a reduction shall not be permitted on sewers 24-inch in diameter or under, but may be permitted on sewers larger than 24-inch in diameter. Inverts of the pipes shall be matched in the manhole.

D. When crossing other utilities, vertical separation shall be shown.

E. There shall be a drop of .1 foot across each manhole with bends of 45° or more.

F. When crossing under existing paved streets or roads, it must be determined if open cut will be permitted. If jack and boring will be required complete details must be shown.

Extra effort should be expended to locate any possible conflict with existing utilities. Allow extra slope through bore and specify minimum and maximum allowable deviations.

G. The depth of the collector line shall be sufficient to receive flows by gravity from all buildings and lots to be served by service lines, installed in accordance with plumbing code specifications and slopes. A 30-inch minimum cover is required. Less cover may be considered with special provisions for protection of the pipe. It may be necessary to require buildings to pump into the line, by installing privately maintained lift station, the number of customers using stations should be kept at a minimum.

H. Privately maintained pump stations for individual buildings and individual commercial developments will be considered when gravity service is not feasible.

I. Alignment

1. Sewers shall be laid with straight alignment between manholes.

2. Horizontal separation at approximately same elevations as other utilities shall be maintained.

3. Sewers 48-inch and larger may be laid on a curve. Refer to pipe manufacturer for allowable curvature.
4. Bends of greater than 90° to be avoided.

J. Pipe Material: PVC pipe SDR35 will be utilized for gravity lines. C900 PVC or DI pipe will be specified where extra strength or joint integrity is required.

1. PVC pressure pipe (SDR26, 21, 18) may be considered in lieu of DI pipe for marginal demands, but care must be exercised as to availability of fittings that may be needed.

2. Pipe material will not be changed between manholes (except where additional structural protection is required).

3. Where ductile-iron pipe is to be installed, external pipe corrosion protection will be specified if soil resistivity is less than 1,000 ohms per square centimeter per centimeter. (Polyethylene sleeves or an anticorrosion embedment as directed by the ECUA.) Internal piper corrosion protection shall be provided by proven Hydrogen Sulfide and abrasion resistant coatings. Fused Epoxy coating is recommended, others shall be approved by ECUA Engineering Department.

K. Cover

1. A minimum cover of 30 inches must be provided where conditions permit.

2. At road crossings, a minimum separation distance of 24 inches shall be maintained from the bottom of the roadway base to the top of the pipe or the top of the casing when provided.

3. At buried stream crossings, a minimum cover of 36 inches is required.

L. Crossings

1. Major road crossings shall be encased per Section 2224 of Standard Specifications or made using ductile iron pipe. Additional requirements of the regulatory agency responsible for the road shall be met.

2. Buried stream crossing shall be encased in steel casing or made with ductile iron pipe. This protection shall extend 10 feet beyond the bank and the pipe or casing shall be anchored to prevent shifting.

3. Aerial stream crossing shall be encased in steel casing or made with ductile iron pipe. This protection shall extend until 30 inches of cover is provided.

4. When crossing under pipes, conduits, or other structures greater than 24 inches in diameter, and a 6-inch separation distance cannot be maintained, the pipe shall be encased in steel casing or made with ductile iron pipe for a minimum of 5 feet distance on either side of the crossed pipe.

M. Manholes: Shall be installed at the end of each sewer line, at all junctions, at all changes in grade, size or alignment; with the following added considerations

1. Maximum spacing shall be 400 feet up to and including 36-inch pipe, controlled by available ECUA cleaning equipment. Spacing for pipes larger than 36-inch may be increased up to, but not to exceed 1,000 feet, controlled by cleaning requirement.

2. Lamp hole may be substituted at ends of short lines, not to exceed 150 feet in length. Lamp holes shall not be used on any gravity sewer line larger than 8 inches in diameter.

3. A drop manhole shall be provided when a sewer invert enters a manhole at an elevation of 2 feet or more above the manhole invert. Where the difference in elevation is less than 2 feet, the invert shall be formed to a half-round concrete channel of equivalent diameter of the outlet pipe to prevent solids deposition. Drop manholes shall use an outside drop connection, except inside drops may be approved for building services and laterals. Inside drops shall be securely fastened to the interior wall of the manhole with stainless steel clamps or pipe hangers. Inside drops shall be extended to the invert of the manhole on a 45° bend installed to direct flow correctly. The drop shall be installed so it does not block manhole access or inhibit maintenance.

4. The inside diameter of manholes shall be a minimum of 48 inches up to and including 24-inch pipe. For pipe larger 24 inches, the inside diameter of the manhole shall be increased so as to provide at least a 12-inch shelf on each side of the pipe.

5. Manholes shall be precast reinforced concrete unless special conditions would dictate a cast in place or other type.

6. The manhole flow channel should be constructed in the field to ensure a smooth flow line from all incoming lines to the outgoing. All channels must provide a smooth transition to the outgoing line with the maximum possible radius on all curves. Precast manhole channels or inverts may be approved, but only if they meet the above requirements. Channels shall have the equivalent diameter of the manhole effluent pipe.

7. Manholes shall be ventilated if the manhole is a receiving manhole for a force main, downstream of such a receiving manhole, is expected to experience conditions of turbulence, or has a drop main or lateral entering it. Ventilation may be required by the ECUA Engineering Department as conditions dictate. Ventilation methods shall be approved by the ECUA Engineering Department in writing before installed.

N. Inverted Siphons

Inverted siphons shall be avoided whenever possible. However, if used, inverted siphons shall have not less than 2 barrels, with a minimum pipe size of 6 inches and shall be provided with necessary appurtenances for convenient flushing and maintenance. The manholes shall have adequate clearance for rodding and in general, sufficient head shall be provided and pipe sizes selected to secure velocities of at least 3.0 feet per second for average flows. The inlet and outlet details shall be arranged so that the normal flow is diverted to one barrel, and so that either barrel may be cut out of service for cleaning.

3.4 Wastewater Services

A. Service Lines

Service lines shall be provided to all lots within a subdivision in accordance with the ECUA regulations. Customer service connections to industrial or commercial lots may be omitted provided approval of the ECUA is obtained prior to approval of plans and specifications.

B. Flow Measurement

The ECUA may require the flow measuring devices where flows in excess of 50,000 gpd can be expected. This includes apartment complexes, trailer parks, shopping centers, etc. The ECUA must approve method and location of flow measurements. Acceptable methods will include pre-approved open channel flow devices with meter/totalizer, pipe meters and hour meters on private lift stations.

C. Cleanouts

When a service line is excessively long, a cleanout shall be provided at the property line for all 4-inch and 6-inch laterals.

`SECTION 575 - WASTEWATER LIFT STATIONS AND FORCE MAINS

PART 1: GENERAL

1.1 PURPOSE

Lift stations shall be provided at any point in a proposed sewage collection system where the upstream gravity collection system cannot be physically connected to the existing collection system in a manner to permit gravity flow. System extensions shall be designed to avoid lift stations as much as possible.

A. In general, lift stations may lift flows to a higher elevation, transport flow horizontally or combine lifting and horizontal transport.
B. In general, lift stations shall utilize submersible pumps placed in a below-ground wet well, unless otherwise noted.

1.2 LOCATION AND DESIGN

Lift station location and design capacity shall be compatible with the ECUA Collection System Master Plan. Lift stations shall be designed to operate effectively at initial flows as well as at ultimate design flows. To that end, each lift station design must address several interrelated elements including, but not limited to:

A. Wet well size (diameter and depth)
B. Force main size and lift station piping
C. Pump and control selection
D. Flow quantity and lift station appurtenances

1.3 CALCULATIONS

Lift station design calculations submitted to ECUA for approval shall include all design considerations and assumptions. (See Lift Station Design Worksheet, pages 575.6 and 575.7)

PART 2: REFERENCE STANDARDS - See Section 570 – Sanitary Sewer Collection System, Part 2

PART 3: DESIGN FLOWS

3.1 FLOW REQUIREMENTS

Lift station design flow requirements shall be developed in accordance with Section 570-Sanitary Sewer Collection System, Part 3 of ECUA's Engineering Manual. In addition, flows shall be estimated for each of the following conditions:

A. Peak hourly flow for initial, intermediate, and ultimate periods

B. Average flow for initial, intermediate, and ultimate periods
C. Minimum flow for initial, intermediate, and ultimate periods

PART 4: DESIGN PARAMETERS AND FUNCTIONAL CRITERIA

4.1 LIFT STATION SITING

Lift station shall be located so as to permit sewage collection by means of gravity flow from the largest feasible drainage area. Consideration may be given to locating lift stations to permit continuing future downstream gravity sewer system development where possible and consistent with ECUA's Collection System Master Plan.

A. General Location: Lift station top elevation shall be above the 100 year flood level as designated by FEMA Flood Maps. In no case should the lift station be placed in an area subject to prolonged periods of flooding. In no case shall the lift station parcel be subject to prolonged periods of flooding.
B. Access: Lift station access shall be readily accessible to maintenance vehicles at all times. Parcels not fronting on public rights-of-way shall be provided with a dedicated access easement at least 20 feet in width and with adequate provisions for turn-around and gate access. Driveways shall be 12 feet wide minimum and paved with asphalt and capable of supporting H-20 traffic loading.
C. Parcel Requirements: The lift station site shall be 50 feet in width and 50 feet in depth, at a minimum. A larger parcel may be required if necessary to accommodate additional equipment or access. Title to the lift station site shall be conveyed to ECUA in accordance with ECUA policy. The site shall be fenced in accordance with ECUA requirements unless specifically exempted. The parcel and any associated access driveways shall be designed to permit proper drainage away from the lift station.
D. Other Considerations: The lift station electrical power service shall be three phase. The potable water service shall be 2-inch in diameter with a backflow preventer and 1 ½ -inch meter.

4.2 FUNCTIONAL CRITERIA

A. Redundancy: Lift stations shall contain a minimum of 2 pumps with each pump capable of pumping a minimum 250 gallons per minute or peak hourly flow, whichever is greater based on the design point using the calculated system head curve Peak hourly flow shall be determined using the curve or formula in Appendix E-2 (page 575.9).

B. Wet Well Sizing: Wet well volume shall be calculated based on the projected ultimate peak flows with consideration for initial peak flows, or a peak hourly flow rate of 250 gallons per minute (62.5 gpm, average daily flow using a 4.0 peaking factor), whichever is greater.

1. Minimum liquid level in the wet well shall be 2 feet above the top of the pumps minimum or in accordance with the manufacturer's requirements for the pump selected, whichever is greater.
2. Cycle time, to pump down and refill, shall be not less than 10 minutes nor more than 15 minutes at 1/2 peak hourly flow.
3. The spacing between 'lead pump on' and 'lead pump off' shall be a minimum of 2 feet. Levels will be field adjusted to match calculations.
4. The spacing between 'lead pump on' and 'lag pump on' shall be a minimum of 1 foot.
5. The high level alarm shall be set not less than 1 foot above 'lag pump on', and at sufficient depth to provide a minimum of 30 minutes storage, calculated at average flow, below the lowest influent line.

C. Velocities: The lift station discharge force main (riser piping) velocity at the initial pumping rate shall be not less than 5 fps. The velocity in the discharge force main (riser piping) at the design pumping rate shall be not more than 10 fps. If flow monitoring is required, the riser piping velocity shall be maintained through the flow meter. The force main velocity in the remaining parts of the proposed transmission system (downstream of the the above-grade plug valves or flow meter) shall not be less than 2.5 fps at the initial peak hourly design pumping rate.

D. Downstream Impacts: Engineer shall coordinate with ECUA Engineering staff to analyze downstream capacities. ECUA staff will assist the engineer to the extent possible with the analyses noted below.

a. When the force main will manifold into an existing force main the impact on that line and all existing pump stations that utilize that line must be evaluated by the Engineer and ECUA staff.

b. When the force main could either discharge to an existing lift station or manifold into that station's force main, an analysis shall be made to determine which alternative is in the best long-term interest of ECUA.

E. System Head: Calculate system head: static, friction and velocity. Select pumps. (See Worksheet, pages 575.6 and 575.7). Pump curves shall show range and efficiencies, horsepower draw, and shall include the system curve(s) at the initial, intermediate, and ultimate design periods. The maximum system pressure shall not exceed 60 psi (138 feet of head).

4.3 WET WELL DESIGN

The miminum wet well size shall be 8-feet in diameter. The wet well shall be sized by determining the combination of diameter and depth most suitable to handle the intended maximum design capacity with adequate provision for emergency storage.

A. Elevations: Based on location constraints, functional criteria, and the approximate wet well size, the following design elements shall be established:

1. Ground elevation at wet well.
2. Lowest influent elevation of gravity system.
3. "High level alarm" elevation.
4. "2nd Lag pump on" elevation (for triplex lift stations).
5. "Lag pump on" elevation.
6. "Lead pump on" elevation.
7. "All pumps off" elevation.
8. Wet well bottom elevation.

B. Future Needs: When the wet well and force main are oversized for future requirements, the station piping, electrical service, and controls shall be sized accordingly. When it is anticipated that a third pump is to be installed in the future, the station shall be designed to accommodate through-wall piping in the wet well top, a manifold into the discharge force main, and appropriate equipment in the control panel.

C. Optimization: Compute design elements for larger and/or smaller diameter wet wells, then select optimum size to meet initial and future demands. Wet well sizing, force main sizing and pump selection may require several iterations to arrive at optimum design for sound economic selection over the proposed design period.

PART 5: DETAIL SPECIFICATIONS FOR WET WELL, PUMPS AND CONTROLS

(See Section 02575)

PART 6: APPURTENANCES

6.1 FENCING

The lift station site shall be fenced in accordance with ECUA specifications unless specifically waived by ECUA's Engineer.

A. The fence shall enclose an area sufficient to protect the lift station and all appurtenances. Minimum size of parcel shall be 50' by 50'.

B. The electric supply meter shall be outside the fence or located so as to be read without entering the fence.

C. See Section 02830 for specifications.

6.2 BYPASS PUMPING

Emergency bypass piping with plug valve and quick-connect coupling shall be the same size (up to 8-inch diameter) as the station piping, and shall be located within the valving area as shown on ECUA's Standard Lift Station Detail Sheet.

6.3 EMERGENCY POWER

Standby emergency power will be required as follows:

A. Lift stations that discharge through a 12-inch diameter or larger piping shall require an on-site emergency generator suitably located and wired for automatic transfer. Generator will be of sufficient size to run all of the station equipment. For duplex lift stations, the generator must be sized to run two pumps at a time. For triplex lift stations, the generator must be sized to run the remaining pump(s) with the largest pump out of service.

B. All lift stations shall be equipped with a manual transfer switch for connecting a portable generator. Engineer shall coordinate with ECUA to determine the best location for the additional manual transfer switch for lift stations that require an automatic transfer switch (ATS),

6.4 FLOW MEASUREMENT

Flow measuring devices shall be provided with lift stations that have a design flow of 1,200 gpm or greater. Flow measurement device shall have instantaneous, totalizing, and recording capabilities.

6.5 CHEMICAL FEED EQUIPMENT

Chemical feed equipment may be required at lift stations or elsewhere in the collection system if conditions may develop causing generation of hydrogen sulfide and other gases. If chemical feed equipment is not required initially, access must be provided for possible future use.

LIFT STATION DESIGN - WORKSHEET

Project Name:_____ **Date:**_____
Project Location:_____ **By:**_____

REQUIRED CALCULATIONS FOR WET WELL DESIGN:

1. Estimate average daily flow (ADF):

Initial (first year) (____ ERC + ____ Acre X ____ $\frac{ERC}{AC}$) X $\frac{240}{1440}$ = _____ gpm

Intermediate (this project) (____ ERC + ____ Acre X ____ $\frac{ERC}{AC}$) X $\frac{240}{1440}$ = _____ gpm

Ultimate (build-out of lift station coverage area) (____ ERC + ____ Acre X ____ $\frac{ERC}{AC}$) X $\frac{240}{1440}$ = _____ gpm

Note: 1 ERC = 240 gpm

2. Select appropriate peaking factor (see Appendix E-2, page 575.9) and determine Design Peak Flow:

Initial	Avg. X ____ Peak = ____ gpm
Intermediate	Avg. X ____ Peak = ____ gpm
Ultimate	Avg. X ____ Peak = ____ gpm

3. Primary Operating Volume in gallons for a minimum cycle time of 12 minutes will be 3 X the pumping rate in gallons per minute. Note: The spacing between 'lead pump on' and 'lead pump off' shall be a minimum of 2 feet. Levels will be field adjusted to match calculations.

   Compute for Initial and Ultimate conditions.

4. Compute Primary Operating Range = Vol. required divided by Vol. per vertical foot. Compute for Initial, Intermediate, and Ultimate conditions.

5. Calculate Emergency Storage Time (see paragraph 4.2, B.5, page 575.3).

6. Calculate Emergency Storage Volume = Emergency Storage Time X Q_{AV}. Calculate for Initial and Ultimate Flow conditions. The minimum emergency storage volume shall be 1,880 gallons (5-feet of additional depth for 8-foot diameter wet well).

7. Calculate Alarm Time Range = Alarm Volume divided by volume per vertical foot.

8. Identify the lowest discharge (or spill) point assuming lift station has failed and system is surcharging.

9. Establish critical pump control elevations.

10. Check Flotation: Total weight - buoyancy force x 1.2 must be positive.

REQUIRED CALCULATION FOR FORCE MAIN DESIGN:

Compute System Curve

TDH shall be evaluated separately for discharge elevation and elevation of high points of the force main, and for initial and aged "C" factors. The typical "C" factors for PVC for initial and aged conditions shall be 140 and 100, respectively. Other "C" factors may be utilized as necessary when analyzing piping of various materials (e.g. ductile iron).

Static Head High Point ____ or Discharge Elevation ____ - Pump Off ____ = ____ ft.

Pump Selection:

PERIOD	PUMP			MOTOR				PERFORMANCE		
	MAKE	MODEL	IMPELLER	MODEL	HP	RPM	ELEC.	GPM	TDH	EFFIC.
Initial										
Intermediate										
Ultimate										

APPENDIX E-1

LIFT STATION DESIGN REFERENCE DATA

Capacity of Force Mains at Given Velocity Q = AV gpm

VELOCITY	FORCE MAINS - NOMINAL SIZE - INCHES DIAMETER										
fps	2"	3"	4"	6"	8"	10"	12"	14"	16"	20"	24"
2	20	40	80	180	310	490	700	960	1250	1960	2820
2.5	25	60	100	220	390	610	880	1200	1570	2450	3520
3	30	70	120	260	470	730	1060	1440	1880	2940	4230
4	40	90	160	350	630	980	1410	1920	2510	3910	5640
5	50	110	200	440	780	1220	1760	2400	3130	4890	7050
6	60	130	230	530	940	1470	2110	2880	3760	5870	8460
7	70	150	270	620	1100	1710	2470	3360	4380	6850	9860
8	80	180	310	700	1250	1960	2820	3840	5010	7830	11270
9	90	200	350	790	1410	2200	3170	4320	5640	8810	12680
10	100	220	390	880	1570	2450	3520	4800	6260	9790	14090

(for friction losses and full chart see Appendix E-3, page 575.10)

PIPE VOLUME (Gal/100 FT):												
Diam.	2"	3"	4"	6"	8"	10"	12"	14"	16"	20"	24"	36"
Vol.	19	42	70	153	259	405	573	800	1044	1632	2350	5284

Manhole or Wet Well Volume per Vertical Foot in Gallons

DIAMETER (FT)	4	5	6	8*	10	12	14
VOL. (GAL)	94.0	147.0	211.5	376.0	587.5	846.0	1151.5

(adjust for reduced diameters for sidewall taper at bottom)
** smallest wet well diameter allowed for lift stations*

APPENDIX E-3

FRICTION LOSS PER 100 FEET LENGTH OF PIPE. BASED ON HAZEN-WILLIAMS FORMULA USING "C" FACTOR OF 140. SIZES OF STANDARD PIPE IN INCHES.

Flowrate (gallons/min)	1/2 -inch		3/4 -inch		1 -inch		1 1/4 -inch		1 1/2 -inch		2 -inch		2 1/2 -inch		3 -inch		4 -inch		5 -inch		6 -inch	
	Velocity (feet/sec)	Loss (ft/100 ft)	Velocity (feet/sec)	Loss (ft/100 ft)	Velocity (feet/sec)	Loss (ft/100 ft)	Velocity (feet/sec)	Loss (ft/100 ft)	Velocity (feet/sec)	Loss (ft/100 ft)	Velocity (feet/sec)	Loss (ft/100 ft)	Velocity (feet/sec)	Loss (ft/100 ft)	Velocity (feet/sec)	Loss (ft/100 ft)	Velocity (feet/sec)	Loss (ft/100 ft)	Velocity (feet/sec)	Loss (ft/100 ft)	Velocity (feet/sec)	Loss (ft/100 ft)
2	2.11	4.07	1.20	1.03	0.74	0.32	0.43	0.08	0.32	0.04	0.19	0.01	0.13	0.00	0.09	0.00	0.05	0.00	0.03	0.00	0.02	0.00
4	4.23	14.69	2.41	3.73	1.49	1.15	0.86	0.30	0.63	0.14	0.38	0.04	0.27	0.02	0.17	0.01	0.10	0.00	0.06	0.00	0.04	0.00
6	6.34	31.13	3.61	7.91	2.23	2.44	1.29	0.64	0.95	0.30	0.57	0.09	0.40	0.04	0.26	0.01	0.15	0.00	0.10	0.00	0.07	0.00
8	8.46	53.04	4.82	13.48	2.97	4.16	1.72	1.10	1.26	0.52	0.77	0.15	0.54	0.06	0.35	0.02	0.20	0.01	0.13	0.00	0.09	0.00
10	10.57	80.18	6.02	20.38	3.71	6.29	2.15	1.66	1.58	0.78	0.96	0.23	0.67	0.10	0.43	0.03	0.25	0.01	0.16	0.00	0.11	0.00
12	12.69	112.38	7.22	28.56	4.46	8.82	2.58	2.32	1.89	1.10	1.15	0.33	0.80	0.14	0.52	0.05	0.30	0.01	0.19	0.00	0.13	0.00
16	15.86	169.89	9.03	43.18	5.57	13.34	3.22	3.51	2.37	1.66	1.44	0.49	1.01	0.21	0.65	0.07	0.38	0.02	0.24	0.01	0.17	0.00
18	19.03	238.13	10.84	60.52	6.69	18.70	3.86	4.92	2.84	2.33	1.72	0.69	1.21	0.29	0.78	0.10	0.45	0.03	0.29	0.01	0.20	0.00
20			12.04	73.56	7.43	22.72	4.29	5.98	3.15	2.83	1.91	0.84	1.34	0.35	0.87	0.12	0.50	0.03	0.32	0.01	0.22	0.00
25			15.05	111.20	9.29	34.35	5.37	9.05	3.94	4.27	2.39	1.27	1.68	0.53	1.09	0.19	0.63	0.05	0.40	0.02	0.28	0.01
30			18.06	155.86	11.14	48.15	6.44	12.68	4.73	5.99	2.87	1.78	2.01	0.75	1.30	0.26	0.76	0.07	0.48	0.02	0.33	0.01
35					13.00	64.06	7.51	16.87	5.52	7.97	3.35	2.36	2.35	1.00	1.52	0.35	0.88	0.09	0.56	0.03	0.39	0.01
40					14.86	82.03	8.59	21.60	6.31	10.20	3.83	3.03	2.68	1.27	1.74	0.44	1.01	0.12	0.64	0.04	0.44	0.02
45					16.72	102.03	9.66	26.87	7.10	12.69	4.31	3.76	3.02	1.58	1.95	0.55	1.13	0.15	0.72	0.05	0.50	0.02
50							10.73	32.66	7.88	15.43	4.78	4.57	3.35	1.93	2.17	0.67	1.26	0.18	0.80	0.06	0.56	0.02
60							12.88	45.77	9.46	21.62	5.74	6.41	4.02	2.70	2.61	0.94	1.51	0.25	0.96	0.08	0.67	0.03
70							15.02	60.90	11.04	28.77	6.70	8.53	4.69	3.59	3.04	1.25	1.77	0.33	1.12	0.11	0.78	0.05
80	8 -inch						17.17	77.98	12.62	36.84	7.65	10.92	5.36	4.60	3.47	1.60	2.02	0.43	1.28	0.14	0.89	0.06
90							19.32	96.99	14.19	45.81	8.61	13.58	6.03	5.72	3.91	1.99	2.27	0.53	1.44	0.18	1.00	0.07
100	Velocity (feet/sec)	Loss (ft/100 ft)							15.77	55.69	9.57	16.51	6.71	6.95	4.34	2.42	2.52	0.64	1.60	0.21	1.11	0.09
110									17.35	66.44	10.52	19.70	7.38	8.30	4.78	2.88	2.77	0.77	1.77	0.26	1.22	0.10
120	0.77	0.03	10 -inch						18.92	78.05	11.48	23.14	8.05	9.75	5.21	3.39	3.03	0.90	1.93	0.30	1.33	0.12
130	0.83	0.04							20.50	90.53	12.44	26.84	8.72	11.31	5.65	3.93	3.28	1.05	2.09	0.35	1.44	0.14
140	0.89	0.04	Velocity (feet/sec)	Loss (ft/100 ft)							13.39	30.79	9.39	12.97	6.08	4.51	3.53	1.20	2.25	0.40	1.56	0.16
150	0.96	0.05									14.35	34.99	10.06	14.74	6.51	5.12	3.78	1.37	2.41	0.45	1.67	0.19
160	1.02	0.05	0.65	0.02	12 -inch						15.31	39.43	10.73	16.61	6.95	5.77	4.04	1.54	2.57	0.51	1.78	0.21
170	1.09	0.06	0.69	0.02							16.26	44.11	11.40	18.58	7.38	6.46	4.29	1.72	2.73	0.57	1.89	0.23
180	1.15	0.07	0.74	0.02	Velocity (feet/sec)	Loss (ft/100 ft)	14 -inch				17.22	49.04	12.07	20.65	7.82	7.18	4.54	1.91	2.89	0.64	2.00	0.26
190	1.21	0.07	0.78	0.03							18.18	54.20	12.74	22.83	8.25	7.93	4.79	2.11	3.05	0.70	2.11	0.29
200	1.28	0.08	0.82	0.03	0.57	0.01	Velocity (feet/sec)	Loss (ft/100 ft)			19.13	59.60	13.41	25.10	8.69	8.73	5.04	2.33	3.21	0.77	2.22	0.32
225	1.44	0.10	0.92	0.03	0.64	0.01					21.53	74.13	15.09	31.22	9.77	10.85	5.67	2.89	3.61	0.96	2.50	0.39
250	1.60	0.12	1.02	0.04	0.71	0.02	0.62	0.01			23.92	90.11	16.76	37.95	10.65	13.19	6.30	3.62	4.01	1.17	2.78	0.48
275	1.76	0.15	1.12	0.05	0.78	0.02	0.57	0.01	16 -inch				18.44	45.28	11.94	15.74	6.94	4.19	4.41	1.40	3.06	0.57
300	1.92	0.17	1.23	0.06	0.85	0.02	0.63	0.01					20.12	53.20	13.03	18.49	7.57	4.93	4.81	1.64	3.33	0.67
325	2.08	0.20	1.33	0.07	0.92	0.03	0.68	0.01	Velocity (feet/sec)	Loss (ft/100 ft)					14.11	21.44	8.20	5.72	5.22	1.90	3.61	0.78
350	2.24	0.23	1.43	0.08	0.99	0.03	0.73	0.02							15.20	24.60	8.83	6.56	5.62	2.18	3.89	0.89
375	2.40	0.26	1.53	0.09	1.06	0.04	0.78	0.02	0.60	0.01	18 -inch				16.29	27.95	9.46	7.45	6.02	2.48	4.17	1.01
400	2.55	0.30	1.64	0.10	1.14	0.04	0.83	0.02	0.64	0.01					17.37	31.50	10.09	8.40	6.42	2.80	4.44	1.14
425	2.71	0.33	1.74	0.11	1.21	0.05	0.89	0.02	0.68	0.01	Velocity (feet/sec)	Loss (ft/100 ft)			18.46	35.24	10.72	9.39	6.82	3.13	4.72	1.28
450	2.87	0.37	1.84	0.12	1.28	0.05	0.94	0.02	0.72	0.01					19.54	39.18	11.35	10.44	7.22	3.48	5.00	1.42
475	3.03	0.41	1.94	0.14	1.35	0.06	0.99	0.03	0.76	0.01	0.60	0.01	20 -inch		20.63	43.30	11.98	11.54	7.62	3.84	5.28	1.57
500	3.19	0.45	2.04	0.15	1.42	0.06	1.04	0.03	0.80	0.02	0.63	0.01					12.61	12.69	8.02	4.23	5.56	1.73
600	3.83	0.63	2.45	0.21	1.70	0.09	1.25	0.04	0.96	0.02	0.76	0.01	Velocity (feet/sec)	Loss (ft/100 ft)			15.13	17.79	9.63	5.92	6.67	2.42
700	4.47	0.84	2.86	0.28	1.99	0.12	1.46	0.06	1.12	0.03	0.88	0.02					17.65	23.67	11.23	7.88	7.78	3.22
800	5.11	1.07	3.27	0.36	2.27	0.15	1.67	0.07	1.28	0.04	1.01	0.02	0.82	0.01	24 -inch		20.18	30.31	12.84	10.09	8.89	4.13
900	5.75	1.33		0.45	2.55	0.19	1.88	0.09	1.44	0.05	1.14	0.03	0.92	0.02					14.44	12.55	10.00	5.13
1000	6.39	1.62	4.09	0.55	2.84	0.23	2.09	0.11	1.60	0.06	1.26	0.03	1.02	0.02	Velocity (feet/sec)	Loss (ft/100 ft)			16.05	15.26	11.11	6.24
1100	7.03	1.94	4.50	0.65	3.12	0.27	2.29	0.13	1.76	0.07	1.39	0.04	1.12	0.02					17.65	18.20	12.22	7.44
1200	7.66	2.27	4.91	0.77	3.41	0.32	2.50	0.15	1.92	0.08	1.51	0.04	1.23	0.03	0.85	0.01			19.26	21.38	13.33	8.75
1300	8.30	2.64	5.31	0.89	3.69	0.37	2.71	0.17	2.08	0.09	1.64	0.05	1.33	0.03	0.92	0.01			20.86	24.80	14.45	10.14
1400	8.94	3.02	5.72	1.02	3.97	0.42	2.92	0.20	2.24	0.10	1.77	0.06	1.43	0.04	0.99	0.01	36 -inch				15.56	11.64
1500	9.58	3.44	6.13	1.16	4.26	0.48	3.13	0.23	2.40	0.12	1.89	0.07	1.53	0.04	1.06	0.02					16.67	13.22
1600	10.22	3.87	6.54	1.31	4.54	0.54	3.34	0.25	2.55	0.13	2.02	0.07	1.64	0.04	1.14	0.02	Velocity (feet/sec)	Loss (ft/100 ft)			17.78	14.90
1700	10.86	4.33	6.95	1.46	4.83	0.60	3.55	0.28	2.71	0.15	2.14	0.08	1.74	0.05	1.21	0.02					18.89	16.67
1800	11.50	4.82	7.36	1.63	5.11	0.67	3.75	0.32	2.87	0.17	2.27	0.09	1.84	0.06	1.28	0.02	0.57	0.00			20.00	18.53
1900	12.14	5.33	7.77	1.80	5.39	0.74	3.96	0.35	3.03	0.18	2.40	0.10	1.94	0.06	1.35	0.03	0.60	0.00				
2000	12.77	5.86	8.18	1.98	5.68	0.81	4.17	0.38	3.19	0.20	2.52	0.11	2.04	0.07	1.42	0.03	0.63	0.00				
2100	13.41	6.41	8.58	2.16	5.96	0.89	4.38	0.42	3.35	0.22	2.65	0.12	2.15	0.07	1.49	0.03	0.66	0.00				
2200	14.05	6.99	8.99	2.36	6.25	0.97	4.59	0.46	3.51	0.24	2.78	0.14	2.25	0.08	1.56	0.03	0.69	0.00				
2300	14.69	7.59	9.40	2.56	6.53	1.05	4.80	0.50	3.67	0.26	2.90	0.15	2.35	0.09	1.63	0.04	0.73	0.01				
2400	15.33	8.21	9.81	2.77	6.81	1.14	5.01	0.54	3.83	0.28	3.03	0.16	2.45	0.10	1.70	0.04	0.76	0.01				
2500	15.97	8.85	10.22	2.99	7.10	1.23	5.21	0.58	3.99	0.30	3.15	0.17	2.55	0.10	1.77	0.04	0.79	0.01				
2750	17.56	10.56	11.24	3.57	7.81	1.47	5.74	0.69	4.39	0.36	3.47	0.20	2.81	0.12	1.95	0.05	0.87	0.01				
3000	19.16	12.41	12.26	4.19	8.52	1.73	6.26	0.82	4.79	0.43	3.78	0.24	3.07	0.14	2.13	0.06	0.95	0.01				

"C" Factor:	Multiply Loss By:
130	1.16
120	1.33
110	1.56
100	1.86

SECTION 1001

ABBREVIATION & DEFINITIONS

PART 1: ABBREVIATIONS

1.1 Wherever the following abbreviations or symbols are used, they are to be construed the same as the respective expressions represented:

AASHTO ..... American Association of State Highway and Transportation Officials
ACI ..... American Concrete Institute
AGC ..... Associated General Contractors of America, Inc.
ANSI ..... American National Standards Institute
APWA ..... American Public Works Association
ASTM ..... American Society for Testing and Materials
AWWA ..... American Water Works Association
BM ..... Bench Mark
C.C. or C/C ..... Center to Center
Cem ..... Cement
CIP ..... Cast-iron Pipe
C.L. or CL ..... Center Line
CMP ..... Corrugated Metal Pipe
CO ..... Clean Out
Conc ..... Concrete
Const ..... Construct
DMH ..... Drop Manhole
D/W ..... Driveway
ECUA ..... Escambia County Utilities Authority
El. or Elev ..... Elevation
Ex. or Exist ..... Existing
F & C ..... Frame and Cover
FH ..... Fire Hydrant
FL ..... Flow Line
Fl. El ..... Floor Elevation
FS ..... Finished Surface
Galv ..... Galvanized
GL ..... Ground Line
Gr ..... Grade
H ..... Height or High
HC ..... House Connection Sewer
Hor ..... Horizontal
ID ..... Inside Diameter
Inv ..... Invert
Lin ..... Linear
Long ..... Longitudinal
Max ..... Maximum
MH ..... Manhole
m ..... Meter or Middle
Min ..... Minutes or Minimum
Mon ..... Monolithic or Monument
OC ..... On Center
OD ..... Outside Diameter
PCC ..... Portland Cement Concrete
PI ..... Plasticity Index

PL..... Property Line or Plastic Limit
PP..... Power Pole
ppm..... Parts per Million
Prop..... Proposed or Property
psf..... Pounds per Square Foot
psi..... Pounds per Square Inch
pvmt..... Pavement
PVCP..... Polyvinylchloride Pipe
Q..... Rate of Flow
R..... Radius
RC..... Reinforced Concrete
RCP..... Reinforced Concrete Pipe
Rdwy..... Roadway
Ret. Wall..... Retaining Wall
R/W..... Right-of-Way
s..... Slope
San..... Sanitary
SCCP..... Steel Cylinder Concrete Pipe
SD..... Storm Drain
Sdl..... Saddle
Sect..... Section
Spec..... Specifications
Sp. MH..... Special Manhole
SS..... Sanitary Sewer
St..... Street
Sta..... Station
Std..... Standard
TH..... Test Hole
UL..... Underwriters' Laboratories, Inc.
V..... Velocity
VC..... Vertical Curve
VCP..... Vitrified Clay Pipe
Vert..... Vertical

PART 2: DEFINITIONS

2.1 Change Order: A written order to Contractor signed by ECUA authorizing an addition, deletion, or revision in the work or an adjustment in the contract price or contract time issued after execution of the agreement.

2.2 Contractor: The person, firm, or corporation that is performing work addressed these specifications.

2.3 Day: A calender day of twenty-four hours measured from midnight to the next midnight.

2.4 Drawings or Plans: The drawings which show the character and scope of the work to be performed and which have been prepared or approved by the Engineer and are referred to in the contract documents.

2.5 Engineer: The Project Engineer or his agent, who is responsible for the engineering design and construction inspection, acting directly or through duly authorized representatives.

2.6 ECUA: The public body or authority or the contracting agency for whom the work is to be performed. The Director of Engineering or his designee is the contact for the ECUA.

2.7 Field Order: A written order issued by Engineer which clarifies or interprets the contract documents.

2.8 Inspector: The authorized representative of Engineer for owner who is assigned to the project site or any part thereof.

2.9 Modification: (a) A written amendment to the contract documents signed by both parties, (b) a change order, (c) a written clarification or interpretation issued by Engineer, or (d) a written order for a minor change or alteration in the work issued by Engineer. A modification may only be issued after execution of the Agreement.

2.10 Owner: The same as the ECUA.

2.11 Project: The entire construction to be performed as provided in the contract documents.

2.12 Reference Specification, Test Methods, and Applicable Codes: All standard specifications and test methods of any society, association, or organization herein referred to are hereby made part of these contract documents the same as if written in full. (Any reference to a paragraph or subparagraph within a section shall include all general provisions of the section to which reference is made.) Reference to such standards refer to the latest published issued as of the date of Invitation to Bid. Reference to local or state codes and laws shall mean the latest adopted and published codes as of the date of the Invitation to Bid.

2.13 Service Connections: Service connections shall be construed to mean all or any portion of the pipe, conduit, cable, or duct which connects a utility main or distribution line to a building, home, residence, or property.

2.14 Shop Drawings: All drawing, diagrams, illustrations, brochures, schedules, and other data which are prepared by Contractor, a sub-contractor, manufacturer, supplier, or distributor and which illustrate the equipment, material, or some portion of the work.

2.15 Special Conditions: Conditions which are written for a specific project and which modify any section or paragraph of the general conditions.

2.16 Specifications, also Technical Specifications: Those portions of the contract documents consisting of written technical descriptions of materials, equipment, construction systems, standards, and workmanship as applied to the work.

2.17 Subcontractor: An individual, firm or corporation having a direct contract with Contractor or with any other Subcontractor for the performance of a part of the work at the site.

2.18 Substantial Completion: The date as certified by Engineer when the construction of the project or a specified part thereof is sufficiently completed, in accordance with the contract documents, so that the project or specified part can be utilized for the purposed for which it was intended; or if there be no such certification, the date when final payment is due.

2.19 Supplementary Specifications: Specifications which are written to modify any section or paragraph of the technical specifications of this document.

2.20 Utility: Overhead or underground wires, pipe lines, conduits, ducts, or structures, operated and maintained in or across a public right-of-way or easement or private easement.

A. Public Utility: Owned and operated by a municipality or another political subdivision of the State.

B. Private Utility: Owned and operated by a private company or corporation.

2.21 Work: Any and all obligations, duties, and responsibilities necessary to the successful completion of the project assigned to or undertaken by Contractor under the contract documents, including all labor, materials, equipment, and other incidentals, and the furnishing thereof.

SECTION 1004

TESTING LABORATORY SERVICES

PART 1: GENERAL

1.1 The Contractor shall be responsible for providing materials which meet the requirements indicated. For manufactured materials such as reinforcing steel, expansion joint materials, concrete pipe, cement, miscellaneous steel, cast iron materials, etc., the Contractor will be required to furnish a manufacturer's certificate that the material meets the requirements specified for this project.

1.2 The Engineer shall monitor all materials incorporated into the project and their placement by testing at the Contractor's expense. The Engineer does not guarantee the accuracy or validity of the data nor does the Project Engineer or Owner assume any responsibility for the Contractor's interpretation of the data. Materials or work which do not meet the specifications shall be removed or modified.

1.3 All retesting for work rejected on the basis of the initial test results will be at the expense of the Contractor and the extent of the retesting shall be determined by the Engineer. The Engineer may require additional testing for failing tests and may required two passing retests. Acceptance will be made by the Engineer.

1.4 The testing laboratory will be approved by the Engineer and shall perform all work in a professional manner.

PART 2: LABORATORY DUTIES AND LIMITS OF AUTHORITY

2.1 Cooperate with Engineer and Contractor: provide qualified personnel as required promptly on notice.

2.2 Acquaint Engineer's personnel with testing procedures and with all special conditions encountered at the site.

2.3 Perform specified inspections, sampling and testing of materials and construction methods:

A. Comply with specified standards, ASTM and other recognized authorities.

B. Ascertain compliance with contract requirements.

2.4 Promptly notify the Engineer of irregularities or deficiencies of work which are observed during performance of services.

2.5 Promptly submit 3 copies of reports of observations and tests to the Engineer including but not limited to:

A. Date issued

B. Project title and number

C. Testing laboratory name and address

D. Name and signature of technician

E. Date of sampling

F. Record of temperature and weather

G. Date of test

H. Identification of product and specification section

I. Location of product

J. Type of test

K. Observations regarding compliance with contract documents

2.6 Perform additional services ordered by the Engineer.

2.7 Laboratory is not authorized to:

A. Release, revoke, alter or enlarge on contract requirements.

B. Approve or accept any portion of work.

C. Perform any duties of the Contractor.

PART 3: CONTRACTOR'S RESPONSIBILITIES

3.1 Furnish product concrete mix design together with the applicable design work sheets and data to meet or exceed contract requirements.

3.2 Cooperate with laboratory personnel, provide access to the work or to the manufacturer's operations.

3. 3 Provide to laboratory preliminary representative samples of materials to be tested in specified quantities.

3.4 Furnish copies of mil test reports.

3.5 Furnish verification of compliance with contract requirements for materials and equipment.

3.6 Furnish casual labor and facilities:

A. To provide access to work to be tested

B. To obtain and handle samples at site

C. To facilitate inspections and tests

D. For laboratory's exclusive use for storage and curing of test samples.

3.7 Notify Engineer 24 hours in advance of operations to allow for the assignment of personnel.

3.8 Notify laboratory 24 hours in advance of operations to allow for the assignment of personnel.

3.9 Correct work which is defective or which fails to conform to the contract documents. Corrective work shall not delay the project or the work of other Contractors.

3.10 Pay all costs of retesting when test results indicate non-compliance with contract requirements.

3.11 Patch all surfaces and areas disturbed by testing operations.

SECTION 1013

SOILS AND SUBSURFACE INVESTIGATION

GENERAL

1.1 Depending on the project requirements, the Engineer may have obtained geotechnical information, which may include subsurface data, logs of soil borings and recommendations from geotechnical consultants.

1.2 If soil borings have been prepared, they will be included in the specifications or on the plans.

1.3 Any geotechnical information included is for information only. The ECUA and the Engineer do not assume any responsibility for the Contractor's interpretation or conclusions drawn from the data.

1.4 The Contractor may, at his option, perform additional subsurface investigations at his own expense.

SECTION 2102

CLEARING AND GRUBBING

PART 1: GENERAL

1.1 General Description of Work

A. Clearing and grubbing on project site of trees, stumps, brush, roots, vegetation, logs, rubbish and other objectionable matter within limits described in specifications or as shown on plans.

B. Clearing and grubbing shall be in advance of grading and trenching operations except that in cuts over 3 feet in depth, grubbing may be done simultaneously with excavation, provided objectionable matter is removed as specified.

C. Disposal of all debris resulting from clearing and grubbing work.

1.2 Protection of Adjacent Work: Protect existing improvements, adjacent property, utilities and other facilities, and trees and plants which are not to be removed from injury or damage.

1.3 Protection from Erosion

A. Contractor shall protect all disturbed areas from erosions.

B. Repair any areas damaged by erosion.

C. Clean erosion sediment from affected areas.

PART 2: PRODUCTS

2.1 Materials: Provide materials required to perform work as specified.

PART 3: EXECUTION

3.1 Clearing

A. Clear all areas covered by dikes, roads, structures and embankments within project limits unless otherwise shown in plans.

B. Remove all saplings, brush, down-timber and debris unless shown or directed otherwise.

3.2 Grubbing

A. Trees, stumps, root systems, rocks and other obstructions shall be removed to the depths shown when they fall within the construction boundary.

B. Blasting not permitted.

3.3 Removal of Debris and Cleanup

A. Burn as permitted by regulating agencies or the Engineer as work progresses.

B. Unguarded fires will not be permitted.

C. Permits will be obtained, where required, for necessary burning or disposal sites.

D. Dispose of all waste materials not burned by removal from site.

E. Materials cleared and grubbed shall be the property of the Contractor and shall be his responsibility for disposal.

PART 4: MEASUREMENT AND PAYMENT

4.1 Clearing and Grubbing

A. Clearing and grubbing shall be measured for payment either in acres or by lump sum only for areas indicated on the plans, or as provided in the proposal and contract.

B. When not listed as a separate contract pay item, clearing and grubbing shall be considered as incidental work, and the cost thereof shall be included in such contract pay items as are provided in the proposal contract.

C. Compensation, whether by contract pay item or incidental work will be for furnishing all materials, labor, equipment, tools and incidentals required for the work, all in accordance with the plans and these specifications.

SECTION 2221

TRENCH EXCAVATION, BACKFILL AND COMPACTION

PART 1: GENERAL

1.1 General Description of Work

A. Excavation, shoring, dewatering, pipe bedding, trench backfill, compaction, grading and cleanup of all pipeline trenching for the project.

B. All work must be done in accordance with these specifications and the safety requirements of the State and OSHA standards.

1.2 Job Conditions

A. Accept site in condition existing during Contract time frame.

B. Groundwater/surface water found during construction are conditions of the Contract and responsibility of Contractor.

PART 2: PRODUCTS

2.1 Pipe Bedding and Backfill

A. Determination of source of materials for bedding and backfill shall be responsibility of Contractor, but use of such materials shall be subject to approval of Engineer.

B. Pipe bedding shall be angular material.

2.2 Sand Backfill

(Where specified on plans.) Use sand or fine aggregate with source of material subject to approval of Engineering.

2.3 Cradling Rock

Use crushed rock or stone with 70-l00% passing l" sieve and no more than 50% passing 3/4" sieve. Crushed oyster shells are acceptable.

2.4 Controlled Density Fill

A. Use high slump mixture of portland cement, fly ash and fine aggregate formulated, licensed and marketed as K-Krete or equal.

B. Provide mixture with minimum 28-day compressive strength of 70 psi with no measurable shrinkage or surface settlement.

2.5 Sheeting, Shoring and Bracing

A. Use sound timber or structural steel.

B. Use shapes and sizes as required.

PART 3: EXECUTION

3.1 General

A. Dewatering

1. Prevent surface water from flowing into excavation.

2. Provide equipment for handling water encountered as required. Obtain approval of proposed method of dewatering.

3. No sanitary sewer shall be used for disposal of trench water.

B. Protection of Existing Utilities

1. Notify all utilities of location and schedule of work.

2. Locations and elevations of utilities shown on plans are to be considered approximate only. Notify utility and Engineer of conflicts between existing and proposed facilities.

3. Repair, relay or replace existing utilities damaged, destroyed or disrupted during work. Unless specified otherwise, replacement will be at the Contractor's expense.

C. Sheeting, Shoring and Bracing

1. Provide as necessary, to hold walls of excavation, prevent damage to adjacent structures, and to protect workmen and property.

2. Leave sheeting and shoring in place where removal might cause damage to work or as otherwise indicated on drawings.

3. When moveable trench shield is used below spring line of pipe, it shall be lifted prior to any forward movement to avoid pipe displacement.

D. Changes in Grade

1. Minor adjustments to grades may be made from plan grades to suit unforeseen construction conflicts or conditions with approval from Engineer.

2. No additional compensation will be made for such minor changes.

3.2 Excavation and Trenching

A. General

1. Method of excavation at Contractor's option.

2. The Contractor will use caution when excavating under tree roots and under and around structures and utilities. Excavate by hand when necessary.

3. Stockpile and replace topsoil equal to pre-existing depth for surface restoration in grassed or agricultural areas where specified or shown on plans.

B. Trench Characteristics

1. Depth: As indicated for pipe installation to lines and grades required with proper allowance for thickness of pipe and type of bedding specified or indicated.

2. Width

a. Keep width of trench as narrow as possible and yet provide adequate room for backfilling and jointing.

b. Maximum trench width of 30-inch or pipe O.D. plus 18 inches where soil conditions permit.

3. Provide bell holes for each pipe joint where pipe bears on undisturbed earth.

4. Trench bottom shall be free of large stones and other foreign material.

3.3 Organic or Unstable Materials

A. Stop work and notify Engineer.

B. Perform remedial work as directed.

C. If material is judged unsuitable and removal is authorized, remove and replace with trench stabilizing material as directed by Engineer.

3.4 Rock Excavation

A. Excavate any rock to maintain minimum 6-inch clearance around pipe.

B. Dispose of rock material not suitable for backfill as directed by Engineer.

C. Use of explosives not permitted without prior written authorization from Owner and Engineer.

D. Provide Special Hazard Insurance covering liability for blasting operations.

3.5 Bedding

A. Place after bottom of trench has been excavated to proper depth and grade.

B. Place, compact and shape bedding material to conform to barrel of pipe to insure continuous firm bedding for fill length of pipe.

C. Provide bedding as described in following table unless indicated otherwise on Plans or in Special Conditions.

	Pipe Material	Minimum Bedding Class
1.	Ductile Iron Pipe	Class D*
2.	Flexible or Composite Pipe	Class 1**
* Refers to standard detail, "Pipe Envelope Requirements", Dwg. D-10.		
** Refers to standard detail, "Flexible Pipe Bedding Requirements", Dwg. D-11.		

3.6 Trench Backfill

A. Use excavated material backfill unless otherwise specified or directed.

B. Use suitable backfill for all trenches within 5 feet of buildings and beneath walks, parking areas, paved streets or existing exposed utilities.

C. Initial Backfill

1. Place after pipe has been bedded and checked for alignment, grade and internal obstructions.

2. Carry out in an orderly fashion after authorization to cover pipe has been given.

3. Allow no more than 300 feet of trench to be open at one time.

4. Do not backfill until concrete or mortar has sufficiently cured.

5. Record location of connections and appurtenances before backfilling.

6. Place by hand and hand tamp to not less than I2 inches above top of pipe, in approximately 4-inch layers.

7. Backfill simultaneously on both sides of pipe to prevent displacement.

8. Place cushion of 4 feet above pipe envelope before using heavy compacting equipment.

D. Subsequent Backfill

1. Place backfill into trench at an angle so that impact on installed pipe is minimized.

2. Compaction of all backfill material shall be performed in a manner that shall not crack, crush, and/or cause the installed pipe to be moved from the established grade and/or alignment.

3. Area under pavement and walks or within buildings shall be mechanically compacted to the top of the subgrade in 6-inch lifts to a minimum of 95 percent Standard Proctor Density.

4. Areas not subject to vehicular traffic shall be backfilled and compacted in layers not more than I2 inches in depth.

5. Compaction method at discretion of Contractor with following exceptions:

   a. If in Engineer's opinion compaction method presents potential damage to pipe, it will not be allowed.

   b. Compaction of any backfill material by flooding or jetting will require prior written authorization of Engineer.

6. Mound excavated materials no greater than 6 inches in open areas only.

7. Fill upper portion of trench with topsoil as specified hereinbefore.

8. No trench shall be open overnight.

E. Controlled Density Fill

1. Use where shown on plans.

2. Provide suitable forms to limit volume of controlled density fill material.

3. Protect exposed utility lines during placement.

4. Place material in accordance with suppliers' written recommendations unless directed otherwise by Engineer.

3.7 Excess Material

Dispose of waste excess excavated material as directed by Engineer.

3.8 Testing

A. Payment of failed tests will be the responsibility of Contractor.

B. Standard Proctor Density

1. ASTM D698.

2. One (I) required for each type of material encountered.

C. In Place Density

1. ASTM D1556 (Sand Cone)

2. ASTM D2167 (Balloon)

3. ASTM D3017 (Nuclear)

PART 4: MEASUREMENT AND PAYMENT

4.1 Trench Excavation

A. Trench excavation shall be considered incidental to pipeline installation.

B. Payment shall be made at the contract unit price per cubic yard only if a bid item is established in the contract.

4.2 Backfill

A. Payment for backfill shall be made at the contract unit price per cubic yard only if a separate bid item is established in the contract.

B. No allowance for waste shall be made.

C. If Engineer orders an initial backfill material other than that specified in contract, it shall be paid for as an extra in price per cubic yard as compacted in place, EXCEPT if a

higher class embedment is ordered by Engineer because the Contractor has over-excavated the trench width.

D. If the Contractor over-excavates the trench width and the Engineer orders the next higher class of embedment to be used, the embedment shall be paid for as if the original specified embedment was used.

E. If the Engineer orders the excavated material to be removed and disposed of and replaced with another material and a separate bid item is not established as a bid item, the material shall be paid as an extra.

F. If the Contractor fails to compact the backfill to the density requirements, the Engineer may order the material removed and replaced at no cost to the Owner.

SECTION 2224

PIPE BORING, DRILLING AND JACKING

PART 1: GENERAL

1.1 General Description of Work

This work shall consist of boring, drilling or jacking operations related to the installation of water pipe and sanitary sewer pipe, in areas where trenching is not feasible or permitted, or as designated on the plans.

PART 2: PRODUCTS

2.1 Steel Casing

A. The steel casing shall be seamless or electric resistance-welded tubing for sizes under 24-inch O.D. and standard double-submerged arc-weld for sizes over 24".

B. Steel pipe shall be A-139, Grade B with one bevelled end (to 37 degrees) and other end square cut.

C. The following table shall be used for determining minimum casing size.

CASING SIZE VERSUS CARRIER SIZE				
Steel Casing Diameter	MINIMUM WALL THICKNESS		Carrier Pipe I.D.	
	Highway	Railroad	Gravity	Pressure
10"	.188"	.188"	NA	4"
12"	.188"	.188"	4"	6"
14"	.250"	.250"	6"	8"
16"	.250"	.250"	8"	10"
18"	.250"	.250"	10"	10"
20"	.250"	.250"	12"	12"
24"	.250"	.281"	14"	14"
24"	.250"	.281"	16"	16"
30"	.250"	.312"	18"	18"
30"	.312"	.344"	20"	20"
36"	.312"	.406"	24"	24"
42"	.375"	.469"	30"	30"
48"	.500"	.532"	36"	36"
60"	.500"	.563"	42"	42"
72"	.625"	.625"	48"	48"

PART 3: EXECUTION

3.1 Boring and Jacking

A. Boring shall be performed to alignment and grade as shown on the construction drawings.

B. The earth and/or rock augers shall not exceed the O.D. (outside diameter) of the steel casing by more than ¼ of an inch. The boring and insertion of the steel casing shall be performed with equipment capable of simultaneous operations.

C. The feed rate of augers and hydraulic pushing of the casing shall be the same. Under no circumstances will boring be allowed unless operations are simultaneous.

D. Every effort shall be made to avoid loss of earth.

E. Excavated material shall be removed from the casing as excavation progresses and no accumulation of such material within the casing shall be permitted.

F. Upon completion of the boring operations, all voids around the outside face of the casing shall be filled by grouting. Grouting equipment and material shall be on the job site before boring operations are started in order that grouting around the bored casing may be started immediately after the boring operations have finished.

G. The allowable tolerance as to grade and alignment of the installed casing shall not exceed 1/10 of a foot per hundred feet of casing length.

H. The Contractor shall be responsible for protecting any underground utilities and for any damage resulting to located utilities.

I. The contractor shall be fully responsible for producing a sound, tight installation, true to line and grade. Gravity pipe shall be skidded through the casing on redwood or pressure treated, stainless-steel tied skids. Ductile iron pipe may be used instead of skids.

3.2 Installation Details

A. Prior to the start of the boring operations, the Contractor shall submit the following details to the Engineer when requested.

1. Boring pit bracing.

2. Casing boring head.

B. Only workmen experienced in boring operation shall perform the work.

3.3 Drilling and Jacking for Conduit

A. Metallic conduit shall be installed under existing pavement by approved jacking or drilling methods.

B. Nonmetallic conduit shall not be installed by jacking. Nonmetallic conduit may be installed by drilling if a hole larger than the conduit is pre-drilled and the conduit is hand-installed.

C. Jacking or drilling pits shall be at least 2 feet from the edge of any type of any pavement, measured from the side of the pit nearest to the pavement.

3.4 Jacking

A. If the grade of the pipe at the jacking end is below the ground surface, suitable pits or trenches shall be excavated for the purpose of conducting the jacking operations and for placing end joints of the pipe. Such work shall be sheeted securely and braced in a manner to prevent earth cavings and to provide a safe, stable work area.

B. Heavy duty jacks suitable for forcing the pipe through the embankment shall be provided. In operating jacks, even pressure shall be applied to all jacks used so that pressure will be applied to the pipe uniformly around the ring of the pipe.

C. A suitable jacking frame or back stop shall be provided. The pipe to be jacked shall be set on guides properly braced together, to support the section of the pipe and to direct it in the proper line and grade.

D. The whole jacking assembly shall be placed so as to line up with the direction and grade of the pipe. In general, embankment material shall be excavated just ahead of the pipe and material removed through the pipe and the pipe forced through the embankment with jacks, into the space thus provided.

E. The excavation for the underside of the pipe, for at least 1/3 of the circumference of the pipe, shall conform to the contour and grade of the pipe. A clearance of not more than 2 inches may be provided for the upper half of the pipe. This clearance is to be tapered off to zero at the point where the excavation conforms to the contour of the pipe.

F. The distance that the excavation shall extend beyond the end of the pipe depends on the character of the material, but it shall not exceed 2 feet in any case. This distance shall be decreased if the character of the material being excavated makes it desirable to keep the advance closer to the end of the pipe.

G. The pipe, preferably, shall be jacked from the low or downstream end. Lateral or vertical variation in the final position of the pipe from the line and grade established by the Engineer will be permitted only to the extend of 1 inch in 10 feet, provided that such variation shall be regular and only in one direction and that the final grade or flow line shall be in the direction indicated.

H. If the Contractor desires, he may use a cutting edge of steel plate around the head end of the pipe extending a short distance beyond the end of the pipe with inside angles or lugs to keep the cutting edge from slipping onto the pipe.

I. When jacking of pipe is once begun, the operation shall be carried on without interruption, insofar as practical, to prevent the pipe from becoming firmly set in the embankment.

J. Any pipe damaged in jacking operations shall be removed and replaced by the Contractor at his entire expense.

K. Immediately after jacking is complete and the carrier or encasement pipe is accurately positioned and approved for line and grade, the clearance space between the pipe and soil shall be completely filled by pressure grouting for the entire length of the installation.

L. The pits or trenches excavated to facilitate jacking operations shall be backfilled immediately after the jacking of the pipe has been completed.

PART 4: MEASUREMENT AND PAYMENT

4.1 Measurement

A. Boring

1. Measurement shall be per linear foot of bored casing, and shall include furnishing all labor, materials, equipment, and work involved in the boring operations.
2. The unit measurement shall also include skids, steel ties, grouting, and other items associated with the boring and casing.

B. Drilling and Jacking for Electrical Conduits

Measurement shall be per linear foot of installed electrical conduit and shall include all labor, materials, equipment, and work required for the operation.

C. Jacking

Jacking pipe will be measured by the linear foot of pipe complete in place. Such measurement will be made between the ends of the pipe along the central axis as installed.

4.2 Payment

A. Boring

1. The accepted quantities for boring will be paid at the unit bid price per diameter of casing per linear foot.

2. Payment for carrier pipe will be paid in accordance with Section 02556 and Section 2570.

B. Drilling and Jacking for Conduit

1. The accepted quantities for drilling and jacking for conduit will be paid at the unit bid price per diameter per linear foot.

2. The accepted quantities for jacking will be paid at the unit bid price per linear foot of the type, size, and class indicated.

C. When not listed as a separate contract pay item, boring, drilling and jacking conduit or jacking shall be considered as incidental work, and the cost there of shall be included in such contract pay item(s) as provided in the contract proposal.

D. Compensation, whether by contract pay item or incidental work will be for furnishing all materials, labor, equipment, tools and incidentals required for the work, all in accordance with the plans and these specifications.

SECTION 2556

WATER DISTRIBUTION AND SERVICE LINES

PART 1: GENERAL

1.1 GENERAL DESCRIPTION OF WORK COVERED

The contractor shall furnish and install all pipes, fittings, structures and accessories required for water distribution and/or service lines in accordance with the requirements of the Construction Plans and related Contract Documents.

1.2 QUALITY ASSURANCE

AWWA Standards

Construction materials and methods shall comply with the requirements of the latest published edition of American Water Works Association (AWWA) Standards. Applicable standards include, but may not be limited to, the following:

1	AWWA C104	Cement Mortar Lining for Ductile Iron Pipe and Fittings for Water
2	AWWA C105	Polyethylene Encasement for Ductile-Iron Piping for Water and Other Liquids
3	AWWA C110, C110a	Gray Iron and Ductile Iron Fittings, 2-inch through 48-inch for Water and Other Liquids
4	AWWA C111	Rubber Gasket Joints for Cast Iron Pressure Pipe and Fittings
5	AWWA C151	Ductile Iron Pipe, Centrifugally Cast in Metal Mold or Sand Lined Molds, for Water or Other Liquids
6	AWWA C153	Ductile Iron Compact Fittings, 3-inch through 12-inch for Water and Other Liquids
7	AWWA C213	Fusion-Bonded Epoxy Coating for the Interior and Exterior of Steel Water Pipelines
8	AWWA C301	Prestressed Concrete Cylinder Pipe (PCCP), 16-inch and Larger
9	AWWA C502	Fire Hydrants
10	AWWA C504	Butterfly Valves
11	AWWA C509	Resilient Seated Gate Valves
12	AWWA C550	Protective Epoxy Interior Coatings for Valves and Hydrants
13	AWWA C600	Installation of Ductile Iron Water Main and Appurtenances
14	AWWA C605	Underground Installation of Polyvinyl Chloride (PVC) Pressure Pipe and Fittings for Water
15	AWWA C651	Disinfection of Water Mains
16	AWWA C800	Underground Service Line Valves and Fittings
17	AWWA C900	Polyvinyl Chloride (PVC) Pressure Pipe 4-inch through 12-inch for Water
18	AWWA C901	Polyethylene Pressure Pipe and Tubing 1/2-inch through 3-inch
19	AWWA C905	Polyvinyl Chloride (PVC) Pressure Pipe, 14-inch and Larger
20	AWWA C906	Polyethylene (PE) Pressure Pipe, 4-inch through 63-inch
21	AWWA C907	Polyvinyl Chloride (PVC) Pressure Fittings, 4-inch through 8-inch

ASTM Standards

In addition, construction materials and methods shall also comply with the requirements of the latest published editions of the American Society for Testing and Materials (ASTM) Standards, and the National Sanitation Foundation (NSF) Standard 61.

PART 2: MATERIALS AND EQUIPMENT

2.1 GENERAL

All pipe, fittings and accessories shall be new, and shall be suitable and rated for potable water use.

2.2 DELIVERY, STORAGE, AND HANDLING

Certificates of Compliance with the Specifications shall be required for all materials used on the Project. All materials shall be protected during transportation, storage, handling, and installation to avoid physical damage. All materials shall be stored to prevent physical deterioration due to sun and weather. The ECUA reserves the right to reject material which in any way does not meet the requirements of these Specifications.

2.3 WATER MAINS

2.3.1 Polyvinyl Chloride Pipe (PVC)

PVC pipe shall meet AWWA Standard C900 or C905, or ASTM Standard D2241, with minimum designations per Table 2.3.1 below. PVC pipe shall be provided with push-on or insert-lock-type joints with the bell integrally cast into the pipe. PVC pipe shall be installed with elastomeric gaskets meeting ASTM Standard F477.

TABLE 2.3.1 - PVC PIPE STANDARDS

Standard	Nominal Size	Dimension Ratio	OD	Pressure Class (psi)	Pressure Rating (psi)
AWWA C900	4-inch thru 12-inch	DR25	CI	100	(165)*
AWWA C905	14-inch thru 36-inch	DR25	CI	(100)*	165
ASTM D2241	2-inch thru 3-inch	SDR26	IP	(95)*	160

*Pressure class and rating designations shown in parentheses are nominal designations.

Markings

PVC pipe shall be marked to indicate the following:

1. Nominal Pipe Size and OD Base
2. Material Code Designation
3. Dimension Ratio
4. Pressure Class or Pressure Rating
5. Manufacturer's Name or Trademark
6. National Sanitation Foundation Approved Marking
7. Appropriate AWWA or ASTM Standard Number

Color-Coding

PVC water pipe shall be color-coded blue in accordance with AWWA Standards. If blue pigmented pipe is not available, white pipe may be substituted subject to the approval of the Director of Engineering or his designee. White pipe used for potable water shall be marked with 3 blue stripes (1/2 inch wide) in permanent ink along the entire length and evenly spaced around the pipe circumference with the word WATER in 3/4-inch letters every 21 inches along each stripe.

2.3.2 Ductile Iron Pipe (DIP)

Ductile iron pipe shall meet AWWA Standard C151 and pressure class based on Table 2.3.2 below for design operating pressures of up to 150 psig, installed in Class 2 Trenching conditions. Increase pressure class or bedding class as required by AWWA C151 for surface loads greater than indicated above or operating pressures greater than 150 psi. DIP shall be constructed with push-on joints using rubber gaskets in accordance with AWWA Standard C111. Other methods of joint construction, such as mechanical, flanged, or ball-and-socket, may be required in special applications as appropriate. DIP shall be lined in accordance with AWWA Standard C104, unless otherwise specified and approved.

TABLE 2.3.2 - DI PRESSURE CLASSES

Diameter	Class	Max. Depth of Bury
3-inch & 4-inch	350	32 feet
6-inch & 8-inch	350	28 feet
10-inch & 12-inch	350	14 feet
14-inch thru 20-inch	250	10 feet
24-inch thru 64-inch	200	8 feet

Markings

Each ductile iron pipe section shall be marked to indicate the weight class or nominal thickness, and casting period. The manufacturer's mark, country where cast, year in which the pipe was produced, and the letters DI or DUCTILE shall be cast or stamped on the pipe. All required markings shall be clear and legible, and all cast marks shall be on or near the bell. All letters and numerals on pipe sizes 14-inch and larger shall be not less than 0.5-inch in height.

Soil Corrosion Protection Encasement

When required, DIP shall be encased in plastic sheet material in accordance with AWWA Standard C105 as stated on project plans/specifications if applicable.

2.3.3 Polyethylene Pipe (PE)

The pipe supplied under this specification shall be high performance, high molecular weight, high density polyethylene pipe and shall conform to ASTM D 1248 (Type III C, Class C, Category 5, p34). Minimum cell classification values shall be 345434C as referenced in ASTM D 3350 - latest edition. All pipe resin shall be manufactured by the same company that manufactures the pipe itself in accordance with these specifications to insure complete resin compatibility and total product accountability. The fittings shall be molded or manufactured from a polyethylene compound having a cell classification equal to or exceeding the compound used in the pipe. To insure compatibility of polyethylene resins, all fittings supplied under this specification shall be of the same manufacturer as the pipe being supplied.

TABLE 2.3.3 - TYPICAL PHYSICAL PROPERTIES OF PE PIPE

Property	Test Method	Unit	Value
Density	ASTM D1505	gms/cc	0.957
Melt Flow	ASTM D 1238 (190/21.60)	gms/ 10 min.	1.5
Environmental Stress Cracking Resistance			
Condition A, B & C, F_0	ASTM D1693	hrs.	>5000
Compressed Ring, F_0	Proposed ASTM	hrs.	>5000

Tensile Strength, Ultimate Type IV Specimen	ASTM D 638 (2"/min.)	psi	5000
Tensile Strength, Yield Type IV Specimen	ASTM D 638 (2"/min.)	psi	3500
Elongation at Break Type IV Specimen	ASTM D 638 (2"/min.)	%	>600
Impact Strength Specimen Thickness 0.125 inch	ASTM D 256 Method A	ft.lbs./inch notch	>12
Vicat Softening Temperature	ASTM D 1525	°F	257
Brittleness Temperature	ASTM D 746	°F	<-180
Flexural Modulus	ASTM D 3350	psi	125,000
Hardness	ASTM D 2240	Shore D	65
Coefficient of Linear Thermal Expansion Molded Specimen Extruded Pipe	ASTM D 696	in./in./ °F	$8.3x10^{-5}$ $1.2x10^{-4}$
Thermal Conductivity	Dynatech-Colora Thermoconductor	TRU, in./ $ft.^2$/hrs./ °F	2.7
Long Term Strength 73°F 140°F	ASTM D 2837	psi psi	1600 800
Material Cell Classification	ASTM D 3350		355434C
Material Designation	PPI		PE 3408

2.3.3.1 Quality Control

The resin used for manufacture of the pipe shall be manufactured by the pipe manufacturer, thus maintaining complete control of the pipe quality. The pipe shall contain no recycled compound except that generated in the manufacturer's own plant from resin of the same specification and from the same raw material. The pipe shall be homogeneous throughout and free of visible cracks, holes, foreign inclusions, or other deleterious defects, and shall be identical in color, density, melt index, and other physical properties.

Approved manufacturers shall be Driscopipe, Plexco and CPS; others as approved by ECUA in writing.
The engineer may request, as part of the quality control records submittal, certification that the pipe produced is represented by the quality assurance testing. Additionally, test results from manufacturer's testing or random manufacturer's representation, may be cause for rejection of pipe represented by the testing. These tests may include density and flow rate measurements from samples taken at selected locations within the pipe wall and thermal stability determinations according to ASTM D 3350, 10.1.9.

2.3.3.1.1 Verification

The owner or the specifying engineer may request certified lab data to verify the physical properties of the materials supplied under this specification or may take random samples and have them tested by an independent laboratory.

2.3.3.1.2 Rejection

Polyethylene pipe and fittings may be rejected for failure to meet any of the requirements of this specification.

2.3.3.1.3 Pipe Dimensions

Pipe supplied under this specification shall have a nominal DIPS (Ductile Iron Pipe Size) O.D. unless otherwise specified. Pipe shall have a SDR (Standard Dimension Ratio) of 11 unless otherwise specified.

2.3.3.2 Color-Coding

HDPE water pipe shall be color-coded with blue striping or have an integral, extruded blue coating.

2.3.4 Alternate Pipe Materials

ECUA may consider other pipe materials as appropriate for the needs of the Project. Alternate pipe materials identified during design and approved for use on the Project shall be noted on the Construction Plans, and a detailed Technical Specification shall be prepared and included in the Contract Documents.

2.4 WATER MAIN APPURTENANCES

2.4.1 Water Main Fittings

Water main fittings shall include Tees, Wyes, Bends, Reducers, and other appurtenances commonly used in pipe construction. Fittings shall meet AWWA Standard C110 or C153 with pressure ratings of not less than that specified for adjacent pipe. Fittings shall be constructed with mechanical joints, unless otherwise specified, and shall be supplied complete with low alloy bolts and nuts, EPR gaskets and other necessary parts required for field assembly. Fittings shall be cement-mortar lined in accordance with AWWA Standard C104/A21.4.

2.4.1.1 Pipe Couplings

Pipe couplings shall be solid sleeve type with mechanical joints at each end containing a compression gasket. Couplings shall be ductile iron, 12 inches minimum in length, with low alloy bolts and nuts, and EPR gaskets. Rings and gaskets shall be sized to conform exactly to the requirements of the pipe manufacturer.

2.4.1.2 Pipe Cut-in Sleeves

Cut-in sleeves shall be solid ductile iron, one end plain for insertion to female fitting, the other end flanged mechanical joint, furnished with loose attaching flange and fastener, nominal length of 20-21 inches. Specify pipe main size and type of pipe fabrication.

Approved Manufacturers

Manufacturer	Model	Application
Clow	F-1220	for centrifugally cast or sand cast pipe (special)
Clow	F-3459	for all classes of centrifugally cast pipe
Union Foundry	21-4520 21-4610 24-4800	MJ X PE FLG X PE MJ X FLG
Clow	F-3459	for all classes of centrifugally cast pipe
Others as approved by ECUA in writing.		

2.4.1.3 Repair Clamps

Repair clamps shall not be used in the installation of new pipe except with the written permission of the Engineer. Repair clamps shall be full circle and selected based on Table 2.4.1.3 below.

TABLE 2.4.1.3 - REPAIR CLAMP SIZES	
Pipe Diameter	Maximum Sections
Up to 12-inch	Single Section
14-inch to 24-inch	Double Section
26-inch and above	Triple Section

Repair clamps shall be composed of stainless steel bands and bolts, DI lugs and full gridded virgin EPR compounded gasket.

Repair clamps shall be sized so that the OD of the existing pipe being repaired falls within the designated range for the clamp size. Repair clamps shall have ample length to give full gasketing at both ends.

Approved Manufacturers

Manufacturer	Model
Ford	F1, FS1 (all SS), Fordflex (SS-DI Lugs)
Smith Blair	2XX*
JCM	101,102,103,104,131,132,133,134
Mueller	520, 530
Others as approved by ECUA in writing.	

*XX: See Mfr.'s catalog to complete model numbers by size.

2.4.1.4 Pipe Restraints

Joint restraints shall be used in conjunction with all water line pipe, fittings and appurtenances. Joint restraints shall be used on pipe and fittings in each direction in accordance with ECUA Standard Detail D-43 and D-44. Restraints shall have set or anchor screws used to secure body to pipe with torque limit break away head design. Stainless steel all-thread tie rods may be used at flanges with permission of the Engineer.

Approved Manufacturers

Manufacturer	Model
Ebaa Iron Works	MegaLug Series 1100, 1500, 2000, 2500, 3000, 3600, 6500
Ford	UNI-Flange UAI, UBI, UI, 1300, 1340, 1390, 1400
JCM Industries	Sur-Grip Restrainers No. 620, 621
Others as approved by ECUA in writing.	

2.4.1.5 Expansion Joints

Expansion joint fittings shall be used where specified on the Construction Plans. They shall be of the rigid or flexible type as specified, and manufactured of ductile iron in accordance with 2.4.1 above. They shall be capable of expanding or contracting to the extent shown on the plans, but in no case less than 4-inch axially, and designed to prevent separation beyond the maximum extension without the use of external tie rods.

Fittings shall be flanged or provided with restrained mechanical joints, individually pressure tested to a minimum of 350 psi against their own restraints, and internally coated on all exposed surfaces with a minimum of 15 mils. of fusion bonded epoxy conforming to AWWA C213. They shall be capable of deflecting not less than 15° by means of an integral ball at each joint in the case of flexible types.

Approved Manufacturers

Type	Manufacturer	Model
Rigid	EBAA Iron, Inc.	EX-TEND 200
Flexible	EBAA Iron, Inc.	Flex-Tend
Others as approved by ECUA in writing.		

2.4.1.6 Tapping Sleeves

Tapping sleeves shall be designed for a working pressure of 200 psig without leakage. Tapping sleeves shall be stainless steel. The outlet branch connection shall have a recessed flanged face for connection of tapping valve with standard dimensions in accordance with MSS SP-60. A complete set of neoprene or other elastomer gaskets shall be furnished. Sleeves shall be furnished to fit cast iron, cement-asbestos, or Class 160 or C900/905 PVC pipe with side connection as shown on plans or specifications in standard pipe sizes of 4-inch X 4-inch through 16-inch X 12-inch. Sleeves shall be furnished with all necessary installation parts such as mechanical joint loose flange ends, bolts, fasteners, seals and gaskets. Refer to Section 2.4.1.6 for Tapping Valve requirements.

Approved Manufacturers

Manufacturer	Main Material	Model
Clow	CI & C900 PVC Class 50, 100, 150, 200 10-inch & 12-inch Class 50, 100	F-5205 F-5207 4 F-5205
American Darling	CI & C900 PVC CI & CA	2800C 2800A
Ford		FAST A
Mueller	CI, DI - 4-inch - 12-inch CA - 4-inch - 8-inch CI Class C & D - 10-inch - 14-inch CA - 4-inch-12-inch	H615 H615 H616 H619
JCM Industries		432
Smith-Blair		662
Others as approved by ECUA in writing		

Note: To specify exact fitting when ordering, state line diameter and line material.

2.4.1.7 Pipe Hangers and Supports

Hangers and supports shall be in compliance with Federal Specification WW-H-171E, or Manufacturer's Standardization Society SP-69, or UL listed. Materials of construction shall be in accordance with the requirements outlined in Table 2.4.1.7 below.

TABLE 2.4.1.7 - PIPE HANGERS AND SUPPORTS MATERIALS OF CONSTRUCTION	
Part I.D.	Material
Clamps	Steel - Epoxy Coated or Galvanized Cast Iron – Galvanized Malleable Iron

Hanger Rods	Steel - Electro Galvanized Steel - Stainless 304
Roller Bases/Roller Stands	Cast Iron
Fasteners/Fittings	Galvanized Steel Stainless
Hanger Rod Inserts	Steel: Cadmium Plated Steel: Galvanized Universal Concrete Insert - Cast Iron - Galvanized
Rod Attachments	Clevis - Forged Steel Turnbuckle: 1) Forged Steel, 2) Malleable Iron Sockets, Eye Nuts, Extension - Malleable Iron
Roller Bases/Roller Stands	Cast Iron
Rollers	Steel or Iron Core, Insulated from Structure

Approved Manufacturers

Manufacturer	Part I.D.	Model No.
Utility Pipe Products	Clevis Hanger	590
	Socket Clamp	224 246
	Concrete Inserts: CB-Universal Screen Insert	 282 152
	Rod Attachments: Eye Nut Forged Clevis Forged Turnbuckle Carbon Steel Couplings Socket Eye Extension	 290 299 230 233 136 110R 157
	Pipe Rolls: Adjustable Swivel Adjustable Steel Yoke	 174 181
	Pipe Roll with Base	274
	Pipe Roll and Plate	277
Others as approved by ECUA in writing.		

2.4.2 Valves

All valves shall be manufactured in accordance with the current appropriate AWWA Standard and shall be NSF approved for use in potable water.

2.4.2.1 Resilient Seated Gate Valves

Resilient seated gate valves shall be designed and fabricated in accordance with the current AWWA Standards. The basic design of the gate valves shall have an iron body, elastomer encapsulated iron disc, bronze stem and operating nuts with non-rising stem design. Valves 16-inches and larger shall be equipped with right angle gears (bevel gearing) for horizontal installation, and shall be equipped with rollers, tracks and scrapers.

The valve working pressure for all sizes shall be a minimum of 200 psig with a test pressure of 400 psig.

2.4.2.1.1 General Materials and Construction

Valves shall open counterclockwise with a 2-inch square iron operating nut secured to the valve stem by a corrosion resistant nut to threads on the valve stem. The valve stem

shall be made of high tensile strength bronze and shall be of one piece construction sealed by O-Rings. The thrust collar shall be secured in place by a stuffing box or bonnet cover with a thrust washer located above the thrust collar. Valve construction shall be so that upper O-Rings can be replaced with the valve in service. The disc shall be cast iron encapsulated with an elastomer material bonded in accordance with ASTM D429 and shall be secured to the threaded stem by a bronze nut. The disc shall effect a seal that is bubble-tight at 200 psig.

2.4.2.1.2 Body - Disc - Bonnet - Operating Nut Material

Cast iron construction in accordance with current AWWA Standard C-509; (or) Cast ductile iron construction in accordance with current AWWA Standard C-515 and AWWA Standard C-153.

2.4.2.1.3 Corrosion Resistant Coatings

All interior and exterior cast iron surfaces shall be coated with fusion bonded epoxy in accordance with AWWA Standard C-550.

2.4.2.1.4 Body Sizing

Valve body length shall be per ANSI Standard B16.2 for the type of end connections specified. In the full open position, the valve internal bore shall be smooth and obstruction-free without cavities or projections that could accumulate solids. The internal cross-sectional area of the valve shall be approximately equal to the nominal cross-sectional area for Schedule 40 PVC pipe of the same nominal internal diameter.

2.4.2.1.5 End Connections

Valves shall be furnished with mechanical joint end connections, complete with flange kits, unless otherwise specified on the plans or purchase order.

When flanged ends are specified they shall be flat face nominal 125# ANSI B16.1 Standard with bolt holes straddling the vertical center line.

Approved Manufacturers

VALVE BODY CONNECTIONS				TAPPING VALVE
Manufacturer	MJ x MJ	MJ x FLG	FLG x FLG	MJ x SF
American Darling (Cast Iron)	4-inch - 12-inch CSR-80X	4-inch - 12-inch CSR-80X	CSR-80X Specify Ends	4-inch - 12-inch No. 862 16-inch - 24-inch*
(Ductile Iron)	4-inch - 24-inch Series 2500 (See Manufacturer's Catalog)			
Clow (Cast Iron)	2-inch - 12-inch F6100	4-inch - 12-inch F-6106	4-inch - 12-inch F-6102	4-inch - 12-inch F-6114 14-inch - 24-inch F-5093*
Kennedy (Cast Iron)	3-inch - 12-inch F-1571-XNRS	3-inch - 12-inch F-1572-XNRS	3-inch - 12-inch F-1561-XNRS	3-inch - 12-inch F-950X

M & H (Cast Iron)	4-inch - 12-inch S-4067-01		4-inch - 12-inch S-4067	2-inch - 12-inch H-667 200 PSI 14-inch - 24-inch H-667 150 PSI
Others as approved by ECUA in writing - Cast iron or ductile iron construction.				

*Metal seated only, specify bypass if required
14-inch and larger valves specify special appurtenances.

2.4.2.2 Resilient Seated Tapping (Gate) Valves

Resilient seated gate valves shall be designed and fabricated in accordance with the current AWWA Standard C-509 or C515. The basic design of the gate valves shall have a cast iron body, elastomer encapsulated cast iron disc, bronze stem and operating nuts with non-rising stem design. The valve working pressure shall be a minimum of 200 psig with a test pressure of 400 psig.

2.4.2.2.1 Materials and Construction

Valves shall open counterclockwise with a 2-inch square iron operating nut secured to the valve stem by a corrosion resistant nut to threads on the valve stem. The valve stem shall be made of high tensile strength bronze and shall be of one piece construction sealed by O-Rings. The thrust collar shall be secured in place by a stuffing box or bonnet cover with a thrust washer located above the thrust collar. Valve construction shall be so that upper O-Rings can be replaced with the valve in service. The disc shall be iron encapsulated with an elastomer material bonded in accordance with ASTM D429 and shall be secured to the threaded stem by a bronze nut. The disk shall effect a seal that is bubble-tight at 200 psig.

2.4.2.2.2 Corrosion Resistant Coatings

All interior and exterior cast iron surfaces shall be coated with fusion bonded epoxy in accordance with AWWA Standard C-550

2.4.2.2.3 Body Sizing

Valve body length shall be per ANSI Standard B16.1 for tapping valves. Tapping valves shall conform to Specification AWWA C509, latest revision, covering gate valves except as modified for passage and clearance of tapping machine cutters. The opening through the valve shall be at least 1/4-inch larger than nominal valve diameter. Tapping valves shall allow full size shell cutters to be used.

2.4.2.2.4 End Connections

Valves shall be furnished with one end of the body with projecting face flange in accordance with specification MSS SP-60 for tapping valve/saddle connections to bolt to a standard tapping sleeve and the other end for mechanical joint.

Approved Manufacturers

See Section 2.4.2.1 above.

2.4.2.3 Butterfly Valves

All butterfly valves shall be of the rubber-seated, tight-closing type. They shall meet or exceed AWWA Standard C504. All valves must use full AWWA C504 Class 150B valve shaft diameter, and full Class 150B underground service operator torque rating throughout entire travel, to provide capability for operation in emergency service.

2.4.2.3.1 Valve Construction

Valve body shall be high-strength cast iron ASTM A126 Class B with 18-8 Type 304 stainless steel body seat. Valve vane shall be high-strength cast iron ASTM A48 Class 40, having rubber seat mechanically secured with an integral 18-8 stainless steel clamp ring and 18-8 stainless steel self locked screws. Shaft shall be one piece ANSI 304 stainless steel. Bearings shall be sleeve-type, self lubricated with O-Ring seals.

2.4.2.3.2 Operators

Operator shall be of the traveling-nut type, sealed, gasketed, and lubricated for underground service. It shall be capable of withstanding an overload input torque of 450 ft. lbs. at full-open or closed position without damage to the valve or valve operator. Operator shall have operating nut or post indicator as specified.

2.4.2.3.3 End Connection

End connections shall be mechanical joint, wafer-type with flange meeting ANSI B16.1-125#, and furnished as specified.

Approved Manufacturers

Manufacturer	Model
Dresser	450
American Darling	Class 150
Clow	F-53XX*
M & H	450, 1450, 4500
Others as approved by ECUA in writing.	

*XX: See Mfr.'s catalog to complete model numbers by size.

2.4.2.4 Valve Boxes

Valve boxes shall be provided for all direct buried valves. Use nominal 6-inch cast-iron sliding-type pipe shaft with cover and base casting. The box top shall be set at finished grade and encased with a concrete ring in unpaved areas. Each valve box shall be furnished with a drop-in cover marked "WATER". See ECUA Standard Detail D-34.

2.4.3 Line Stops

Line stops are to be used where specified to temporarily stop water line water flow without depressurizing the entire line. The line stop parts and installation equipment are to be rated at a minimum of 150 psig working pressure unless otherwise specified.

2.4.3.1 Materials and Construction

Tapping saddles shall have 360° clamping on the main. Main sizes 4-inch - 8-inch to be fabricated of 304 Stainless Steel; 10-inch and greater to be fabricated Carbon Steel with

epoxy coating. All bolts and fasteners are to be 304 Stainless Steel, and the saddle shall be installed with Buna-N or neoprene rubber full facing gasket.

The stopping device attaching nozzle to be vendor's standard with connecting threads or flange face, and the nozzle I.D. to be machine with a shelf to provide a position stop for the closure plug.

The closure plug is to be fabricated carbon steel, ductile iron, or malleable iron with at least one Buna-N or neoprene O-Ring seal on the outside diameter.

2.4.3.2 Corrosion Resistant Coatings

Non-stainless steel permanently installed parts to have manufacturer's standard red or black water base epoxy coating.

2.4.3.3 Connection

Tapping saddle shall be fabricated with dimensions to fit on concrete, steel, CA, PVC, CI, DI main as specified.

2.4.3.4 Installation

Temporary line stops shall only be installed by vendor personnel or contractor personnel trained and certified for stop by the vendor.

Approved Manufacturers (Main Sizes 3/4-inch - 42-inch)

Manufacturer	Contact
Hydra-Stop, Inc.	Phone: 800-538-7867 FAX: 708-389-5125
International Piping Services Co. (IPSCO)	Phone: 708-343-1333 FAX: 708-343-1435
JCM 440	Phone: 800-527-8482 FAX: 800-874-9524
Others as approved by ECUA in writing.	

2.4.4 Location Aids

All new water main and service line installations shall include an approved method for locating lines from the ground surface after completion.

2.4.4.1 Tracer Wire

Tracer wire for water lines shall be minimum 12 gauge copper with blue PVC insulation. Tracer wire systems shall be electrically continuous covering all mains and services within the project. Wire-to-wire connectors shall be made with silicone-filled wire nuts. Wire-to-appurtenance attachments shall be made with lug-type terminals. Wire shall be secured to the top of each pipe joint with nylon ties or PVC tape placed on 10-foot intervals. Wire shall be secured to pipe with blue colored PVC Tape.

Approved Manufacturers (Tracer Wire Silicone-filled Wire Nut Connectors)

Manufacturer	Model
Ideal Industries	Twister® DB Plus
King Technology, Inc.	Failsafe™
Others as approved by ECUA in writing.	

2.4.4.2 Pipeline Markers

Markers shall be of a passive electronic type that reflects a signal back to an electronic hand-held transmitter/detector. Electronic components shall be enclosed in a blue waterproof polyethylene housing. Markers shall have a different response frequency for each service line type.

Markers shall be ScotchMark® products manufactured by 3M Telecom Systems Group, Austin, Texas. Alternate manufacturers by ECUA in writing.

Application	Usable Depth	Dimension/ Configuration	Service	Model
Near Surface	2 feet	3½"L X 5/8" ∅ Cylinder	Water	1434
Medium Depth	4 feet	4" ∅ Ball	Water	1403
Deep	6 feet	8" ∅ X 1" Thick Disc	Water	1257

2.5 HYDRANTS AND FLUSHING EQUIPMENT

2.5.1 Fire Hydrants

Fire Hydrants shall be current design in compliance with the AWWA Standard C-502, with rated working pressure of 200 psig. The basic design of the fire hydrant shall be of the dry barrel type of breakaway traffic design.

2.5.1.1 Hydrant Construction

The hydrant inlet connection shall be 6-inch mechanical joint type complete with flange kit.

The hydrant shall be designed with a traffic breakaway feature incorporating a flanged design using breakable bolts and breakaway shaft coupling. Split ring retainer-type breakaway design with pinch bolts is not acceptable. The hydrant design shall allow the upper barrel to be rotated 360 degrees in order to assure proper nozzle orientation.

The drain valve shall assure quick and complete drainage of the hydrant and the drain hole shall be bushed with bronze if passing through cast iron. The drain valve sealing facing shall be made of Buna N, nylon or urethane. If the valve top plate comes in contact with the bronze seat ring to facilitate draining of the hydrant, the valve top plate shall be made of bronze.

2.5.1.2 Main Hydrant Valve

The main hydrant valve shall be compression type, opening counterclockwise against system pressure and closing clockwise with system pressure. The main valve connection opening shall not be less than 5¼-inches. The main valve shall have a resilient seat.

The hydrant shall be designed such that the operating threads on the stem are prevented from coming in contact with potable water and shall be enclosed in an operating chamber and sealed by O-Rings at the top and bottom of the chamber. The

chamber shall be constructed for grease or oil lubrication with an installed grease fitting for maintenance.

The operating nut shall be 1½-inches in size and pentagon in shape and of one-piece construction.

The hydrant shall have one 4½-inch pumper nozzle, and two 2½-inch pumper nozzles having National Standard Hose coupling threads. The nozzles shall be field replaceable utilizing either a threaded or quarter-turn fitting with an O-Ring seal.

2.5.1.3 Operation and Maintenance Features

The hydrant shall not incorporate parts requiring field adjustment for proper operation.

The hydrant shall be designed to permit the removal of all working parts from the hydrant through the barrel without disturbing the earth around the hydrant.

Removal of the working parts of the hydrant shall be accomplished by use of a seat. Hydrants requiring other special tools to perform removal of interior parts will not be accepted.

2.5.1.4 Materials

All operating parts including operating nut, hold-down nut, drain ring and seat ring shall be bronze. The valve seat ring shall thread into a bronze insert or drain ring to provide bronze-to-bronze seating. Breakaway stem coupling is to have bronze or stainless steel bolts or pins.

2.5.1.5 Markings

The fire hydrant shall have permanent markings identifying the manufacturer by name, initials or insignia, the size of the main valve opening, and the year of manufacture.

Approved Manufacturers

Manufacturer	Model No
Kennedy	81-A
Mueller	A423
American Darling	B84B
Clow	Medallion
M & H	129T
Others as approved by ECUA in writing.	

2.5.2 Fire Hydrant Appurtenances

2.5.2.1 Extension Kits

When specified, hydrants shall be installed using original manufacturer hydrant extension kits as necessary to position the hydrant breakaway above finish grade per ECUA Standard Detail D-35.

Stand extension shall be in standard lengths of 12, 24, 36, 48, and 60 inches.

2.5.2.2 Hydrant Connectors

Hydrant connector spools shall be ductile iron per AWWA C151 used for connection between the hydrant and lead valve, and shall incorporate joint restraints. One end of the connector spool shall have swivel flange. See ECUA Standard Detail D-35.

Standard hydrant connector sizes shall be as follows:

1. 6-inch X 12-inch long
2. 6-inch X 24-inch long
3. 6-inch X 36-inch long
4. 6-inch X 48-inch long
5. 6-inch X 60-inch long

Hydrant Offset Connectors

When a connector between the hydrant and lead valve specified to adjust hydrant height or to offset the hydrant from the valve, an offset connector shall be used. Material to be ductile iron per AWWA C153/ANSIA2153. Sizes shall be as follows:

1. 6-inch X 18-inch long with 6-inch offset
2. 6-inch X 30-inch long with 12-inch offset
3. 6-inch X41-inch long with 24-inch offset

Approved Manufacturers

Manufacturer	Straight Hydrant Connector	Offset Connector
Assured Flow Sales, Inc.	N/A	GRADELOK
Clow	✓	N/A
Others as approved by ECUA in writing.		

2.5.3 Flushing Hydrants

Flushing hydrants shall be current design and in general compliance with AWWA Standard C-502, with rated working pressure of 200 psig.

2.5.3.1 Hydrant Construction

Flushing hydrants shall meet the requirements of Section 2.5.1, except breakaway feature is not required.

2.5.3.2 Main Valve

Generally the same as Section 2.5.1, except main valve opening shall be not less than 2-1/8 inches and the flushing hydrant shall have one (1) 2½-inch nozzle having national standard hose coupling threads.

2.5.3.3 Operation and Maintenance Features

Unless otherwise specified, the hydrant bury length shall be 36 inches. The bury length is the distance measured to the nearest 1/2 foot, from the bottom of the connecting pipe to the ground line of the hydrant.

2.5.3.4 Materials

All operating parts including operating nut, hold-down nut, drain ring and seat ring shall be bronze. The valve seat ring shall thread into a bronze insert or drain ring to provide bronze-to-bronze seating.

2.5.3.5 Markings

Flushing hydrant markings shall meet the requirements of Section 2.5.1 for fire hydrants.

Approved Manufacturers

Manufacturer	Model
Clow	F-4764
M & H	Style 33
Mueller	A-411
Others as approved by ECUA in writing.	

2.6 WATER SERVICE LINES

2.6.1 Polyethylene (PE) - Tubing

Polyethylene service tubing for water supply shall conform to AWWA C901. PE tubing dimensions shall conform to ASTM D2737 with Copper Tubing OD base. Refer to Section 2.3.3 for service lines greater than 2 inches in diameter.

2.6.1.1 Materials

PE tubing material shall conform to ASTM D3350, Standard Code PE 3408.

2.6.1.2 Pressure Rating

PE tubing shall be Pressure Class 200 psi with a minimum working pressure of 150 psig, and comply with ASTM D1598, D1599, D1693, D3350 and AWWA 901.

Dimensions and acceptable standard sizes

TABLE 2.6.1 - PE TUBING DIMENSIONS (DR9)			
NOM	OD	WALL	ID
1	1.125	.137	.851
1½	1.625	.200	1.225
2	2.125	.250	1.625

2.6.1.3 Markings

1. Nominal Size
2. Standard PE Code: 3408
3. Tubing: DR-9
4. Pressure Class: PC200
5. Manufacturer's Name or Trademark
6. Blue Markings and Stripes

Approved Manufacturers

Manufacturer	Model
Phillips	Driscopipe 5100 Ultra-line

Others as approved by ECUA in writing.

2.6.2 Copper Water Service Tubing

Copper water service tubing shall be Type K suitable for underground potable water services. Tracer wire is not required with copper tubing.

2.6.2.1 Material

Tubing is to be supplied in conformance with ASTM B88 for dimension and materials.

2.6.2.2 Pressure Rating

Test Pressure: 200 PSIG
Operating Pressure: 150 PSIG

TABLE 2.6.2 - COPPER WATER TUBING DIMENSIONS (ASTM B88)

Size (inches)	Nominal OD	Wall Thickness
1	1.125	.065
1½	1.625	.072
2	2.125	.083

2.6.2.3 Pipe Markings

1. Nominal Size
2. Type K
3. ASTM B88
4. Manufacturer's name or logo
5. NSF seal

2.7 SERVICE LINE APPURTENANCES

2.7.1 Fittings and Valves

Fittings and valves shall be manufactured in accordance with AWWA C-800 and be listed and approved by NSF for underground use in potable water service.

2.7.1.1 Material

Fitting and valve bodies, plugs, and compression nuts shall be bronze, copper alloy No. C83600 and meet chemical and mechanical requirements of ASTM B62 or ASTM B584.

Component parts such as fasteners, seals, and packings may be of other materials selected for adequate endurance, corrosion resistance and strength in accordance with AWWA C-800.

2.7.1.2 Pressure

Fittings and valves shall be high pressure type for maximum allowable pressure of 150 PSIG, nominal operating pressure 100 PSIG.

2.7.1.3 Thread Specifications

Fittings and valves shall be of materials and fabricated in accordance with appropriate specification:

TABLE 2.7.1 - THREAD SPECIFICATIONS	
Thread Type	Standard
Unified Inch	ANSI/ASME B1.1
General Purpose Pipe	ANSI/ASME B1.20.1
Dryseal	ANSI/ASME B1.20.3

Fittings and valves shall be marked as appropriate with the following information: manufacturer's name or logo; pressure rating; direction of flow; and size.

Pack Joint Couplings - Acceptable Manufacturers		
Type	Manufacturer	Model
Joint Couplings Copper or Plastic Tube X MPT	 Ford Mueller	 C84-XX H-15428-X
Copper or Plastic Tube X FPT	Ford Mueller	C14-XX H-15451-X
Copper or Plastic Tube to Tube	Ford Mueller	C44-XX H-15403-X
Female Copper Pipe (replaces flare nut) X Copper or Plastic Tubing	Ford Mueller	CO4-XX H-15071-X
Others as approved by ECUA in writing.		

[X, XX: See Mfr.'s catalog to complete model numbers by size]

2.7.1.4 Tapping Saddles

Tapping saddles shall be either bronze or cast or ductile iron with shop coat. Saddles used to tap Class 160 PVC pipe shall be designed with mechanical features or stops to prevent over-tightening.

Saddle Sizes

1. Main Pipe: 2-inch - 16-inch
2. Tapping valve connections: 1-inch, 1½-inch, 2-inch

Acceptable Manufacturers

Manufacturer	Application	Model
Ford	1-inch tap on PVC/steel OD pipe 1-inch tap on DI and CI Pipe	S-70 and S-90 F-101 and F-202
Mueller		H-105
Smith Blair		313
Others as approved by ECUA in writing		

2.7.1.5 Water Tubing Couplings

Water tubing couplings in sizes 1-inch, 1½-inch, and 2-inch only shall be bronze compression-type, inlet and outlet for PE or copper tubing. Crimp-type couplings are not acceptable.

Acceptable Manufacturers

Manufacturer	Model

Ford	C44-XX*
Mueller	H-15403-XX*
Others as approved by ECUA in writing	

*XX: See Mfr.'s catalog to complete model numbers by size.

2.7.1.6 Meter Couplings

Meter couplings shall be bronze and sized as appropriate to accommodate the relevant meter. Inlet shall have male pipe thread.

Acceptable Manufacturers

Manufacturer	Model
Ford	C84-XX*
Mueller	H-15428-XX*
Others as approved by ECUA in writing	

*XX: See Mfr.'s catalog to complete model numbers by size.

2.7.2 Service Line Valves

2.7.2.1 Corporation Stops

Corporation stops shall be brass, high-pressure class, ball type, with inlet taper CC thread. Outlet shall be compression-type for PE or copper tubing. Corporation stops shall be sized for 1-inch, 1½-inch or 2-inch tubing as appropriate.
Acceptable Manufacturers

Manufacturer	Model
Ford	F-1000 and FB-1000
Mueller	300, Ball-type
Others as approved by ECUA in writing.	

2.7.2.2 Curb Stops

Curb stops shall be brass, high pressure, ball-type with locking wings. Inlet shall be compression-type for PE tubing. Outlet shall be female iron pipe threads. Curb stops shall be sized for 1-inch, 1½-inch or 2-inch tubing as appropriate.

Acceptable Manufacturers

Manufacturer	Size	Model
Ford	1-inch 1½-inch 2-inch	B41 - 444W B41 - 666 B41 - 727
Others as approved by ECUA in writing.		

2.8 BACKFLOW PREVENTION DEVICES

Backflow prevention devices shall be manufactured in accordance with AWWA C-506, and shall also be approved by ASSE and/or approved by NSF for use in potable water systems with a maximum continuous operating pressure of 150 psig, and capable of sustaining a hydrostatic test pressure of 300 psig. Backflow prevention devices shall be located

Materials and Construction

The body shall be cast iron with hot dip galvanized coating or fusion bonded epoxy on the interior and exterior, or cast bronze with a maximum lead content 5%. Working parts and springs shall be bronze or stainless steel; valve discs shall be sili cone rubber; diaphragms shall be fabric reinforced neoprene, and O-rings shall be Buna-N, neoprene, or silicone rubber. Check valve enclosures shall be glass-filled nylon or Teflon, or bronze or stainless steel. Other working parts shall be bronze or stainless steel.

2.8.1 Double-check Device

Double-check backflow preventers shall have two independent check valve assemblies. The body may consist of one or more castings, and shall be equipped with ports and valves as necessary to allow testing in place.

2.8.2 Reduced Pressure Principle Device

Reduced pressure principle backflow preventers shall have two independent check valves with an intermediate relief valve incorporating a pressure diaphragm valve assembly that maintains a minimum 2 psig differential pressure across the assembly.

2.8.3 End Connections

Devices shall be manufactured with standard female pipe thread, size 3/4-inch, 1-inch, 1-1/2-inch, or standard ANSI B16.2 125# flanged, sizes 2-inch and greater.

2.8.4 Appurtenances

All back flow devices shall be provided and installed as a complete assembly with all necessary fittings to enable testing in place. Tapped test ports shall be fitted with test petcocks in each body cavity. Inlet and outlet gate or ball valve shall be of the same line size as that of the body.

Acceptable Manufacturers

Manufacturer	Type Device Double Check	Double Check Detector	Reduced Pressure
Ames	2000 DCA OSY 2000 DCA NRS 2000 DCA OSY Epoxy 2000 DCA NRS Epoxy	3000 DCDA OSY 3000 DCDA NRS 3000 DCDA OSY Epoxy 3000 DCDA NRS Epoxy	4000 RP OSY 4000 RP NRS
Febco	850 NRS 850 OSY		860 NRS 860 OSY
Watts	709 OS&Y/BV	709 DDC	909 909 DDC (Detector)
Hersey	3/4" - 2" FDC 3" - 10" No. 2	3" - 10" DDC II	3/4" - 2" FRP II 2½" - 10" 6CM
Others as approved by ECUA in writing.			

2.9 METER BOX ASSEMBLIES

Meter box assemblies for 5/8-inch meters shall be cast iron open bottom per ASTM A-48 with cast iron lid with ECUA imprint. The box assembly shall include a ball valve with locking nuts, pack joint coupling for copper or PE tubing with expansion connection and gaskets as needed. Meter box and cover for meters 2-inch and larger shall be constructed in accordance with ECUA Standard Details D-25 and D-26.

Acceptable Manufacturers

Manufacturer	Model	Meter Size
Ford	G148-133 (Modified) w/ 1" pack joint for copper or PE Tubing	5/8"
Others as approved by ECUA in writing.		

PART 3: EXECUTION

3.1 GENERAL

The contractor shall provide all labor, equipment and materials as required to install all pipes, valves, fittings, and other appurtenances as indicated on the construction plans or as specified in the contract documents.

3.2 POTABLE WATER LINE SEPARATION FROM SANITARY SEWER LINES

A. When a gravity sewer line must cross under a water line with less than 18-inch vertical clearance, one of the following methods may be used.

1. Fully encase sewer line with a minimum of 4 inches of concrete (2500 psi) for a minimum distance of 10 feet either side of the point of crossing, which must be at least 5 feet from a water line joint. If the crossing is other than at right angles, increase the length of encasement so that the end of the encasement will be at least 12 feet from a water line joint.

2. Use equally rated pressure pipe for the sewer lines with no joints closer than 12 feet apart and at least 6-inch vertical clearance.

3. Install sewer pipe into at least a 20-foot section of steel casing (casing I.D. slightly larger than sewer pipe bell O.D.) and center over crossing so that end of casing will be at least 12 feet from water line joint. Seal the ends of the casing with non-shrink grout. Refer to Section 2224 – Pipe Boring, Drilling and Jacking, for casing and boring requirements.

B. When a gravity sewer line must cross over a potable water line, regardless of clearance, because the water line cannot be relayed above sewer, use method 2 or 3 in subsection A. Concrete encasement will not be allowed.

C. When a sanitary force main must cross under a potable water line with less than an 18-inch vertical clearance, or over the water line, use a higher rated pressure pipe as in method 2 or 3 in subsection A.

D. When the water line being crossed in A, B or C is a house or building service lateral, 2-inch or smaller and the service lateral is a continuous piece of PE DR9 or copper tubing, then the above rules do not apply; but locate so that the distance to a sewer or force main joint is as great as possible.

E. When a gravity sewer line must run parallel to and less than 18 inches below a potable water line and:

1. 6 to 10 feet apart for less than 40 feet, use method 1, 2 or 3 in subsection A.

2. 6 to 10 feet apart for over 40 feet, use method A2 and stagger joints.

3. 3 to 6 feet apart for any distance, use a higher rated pressure pipe as in method A2.

F. When a sanitary force main must run parallel to and less than 18 inches below a potable water line and:

1. 6 to 10 feet apart for any distance, use a higher rated pressure pipe as in method A2.

2. 3 to 6 feet apart, use a higher rated pressure pipe for both water and force main. Example: If force main is PC160 PVC DR26, and water line is C-900 DR25; then force main should be PVC DR21 and water line should be DR21, using extreme care to have both properly color-coded.

3.3 PIPE INSTALLATION

The contractor shall utilize equipment and methods in accordance with pipe manufacturer's requirements and sound construction practices to insure pipe installation to line and grade as indicated.

3.3.1 Trench Excavation

Refer to Section 2221: Trench Excavation Backfill and Compaction. Maintain minimum of 30 inches and maximum of 36 inches of cover below finished grade unless shown otherwise on the construction plans.

3.3.2 Alignment

Pipe shall be installed along the alignment indicated by the construction plans. Accomplish horizontal and vertical changes in alignment of pipe with bends or other appropriate fittings. Limit joint deflection as recommended by the pipe manufacturer.

3.3.3 Pipe Preparation

The contractor shall clean the interior of all pipes, fittings, and joints prior to installation. Pipes shall be inspected for defects prior to installation. Damaged pipe shall be rejected and removed from the project.

3.3.4 Pipe Installation

Install pipe only when weather and trench conditions are suitable. Do not lay pipe in water. Join pipe in accordance with manufacturer's recommendations.

Provide initial backfill or anchoring as necessary to prevent displacement and preserve alignment after establishing final position.

Encase water pipe in steel casing or use ductile iron pipe when crossing under pipe, conduit, or structure when a 6-inch separation distance cannot be maintained. This protection shall extend a minimum of 5 feet beyond crossed structure. (See Section 2556.3.2.D for Sanitary Sewer Lines.)

3.3.5 Protection

Prevent the introduction of foreign matter into the pipe at all times. Close open ends of pipe with water tight fitting closures or plugs. Do not let water fill trench, but include provisions to prevent flotation should water control measures prove inadequate. Remove water, sand, mud and other undesirable materials from trench before removal of pipe closure piece.

3.3.6 Cutting

PVC or PE pipe shall be cut in a neat workmanlike manner, and the spigot end shall be beveled per manufacturer's recommendation. Ductile iron pipe shall be cut in accordance with manufacturer's recommendation. Do not allow excessive heat to develop. Smooth and bevel cut end as per manufacturer's recommendation. Use of pipe with damaged lining is unacceptable.

3.3.7 Service Lines

Service lines shall be constructed where shown on plans and in accordance with ECUA Standard Detail Drawing D-21.

3.3.8 Closure Pieces

Closure pieces shall only be used where called for on plans, or with written permission of the ECUA. Closure may be accomplished with sleeve coupling as long as its length is such that gaskets are not less than 3 inches from pipe ends.

3.3.9 Restraints and Thrust Blocking

Mechanical joint restraints shall be furnished and installed for all water line fittings and appurtenances. Reference ECUA Standard Drawing D-44. Restraints and thrust blocks shall also be installed for 45° and 90° bends, tapping sleeves, tees and main dead ends. Reference ECUA Standard Drawings D-43 and D-44.

3.4 APPURTENANCE INSTALLATION

3.4.1 Valves

Valves shall be installed with operating stems vertical when installation is direct burial. Valves shall be installed on a suitable bearing surface so as to prevent vertical displacement.

3.4.2 Valve Boxes

Valve boxes shall be centered on the valve. The earth shall be compacted around each valve box to a distance of 4 feet on all sides of box, or to undisturbed trench face if less than 4 feet. An 18-inch diameter by 4-inch thick collar shall be constructed and sloped to direct water away from the valve box. In lieu of the constructed collar, a 24-inch by 4-inch thick pre-cast, sloped, concrete collar may be used.

3.4.3 Tracer Wire

Tracer wire shall be installed on all new water mains and on water service lines installed in conjunction with new water mains. The tracer wire shall be placed directly above the pipe and electrically continuous throughout the project. Tracer wire shall be secured to the pipe with PVC tape the same color as the wire insulation, at a maximum of 10-feet on center between tapings. The tracer wire shall be brought to the ground surface at

each valve location in accordance with ECUA Standard Detail D-34. Splices and/or connections in the tracer wire shall be installed with silicone-filled wire nuts designed for direct burial.

3.5 FIRE HYDRANT FLUSHING EQUIPMENT INSTALLATION

3.5.1 Hydrants

Hydrants shall be installed in accordance with ECUA Standard Detail D-35.

3.5.2 Flush Stands and Valves

Flush stands shall be installed as shown on ECUA Standard Detail D-41, depending on line size.

3.6 SERVICE LINE INSTALLATION

3.6.1 General

The contractor shall install individual services with tracer wire from the new main to a convenient point on the right-of-way or property line for each house, building or unit that is to be served through an ECUA meter. This section will deal with service line tubing 2-inches in diameter and smaller, to serve 5/8-inch, 1-inch, 1-1/2-inch, and 2-inch meters. The installation of service lines for 3-inch meters and larger shall be in accordance with the requirements for water main installation. (See Section 3.3)

3.6.2 Service Line Connections

Service lines shall be installed in accordance with ECUA Standard Detail D-21. Tubing shall be installed in one continuous length from corporation stop to curb stop with no intermediate fittings. Service lines damaged after initial installation but before acceptance may be repaired by means of a single splice, except that no repair fittings will be permitted under any paving. The tap location shall be not less than 10 feet from any sanitary sewer joint with less than 18 inches vertical clearance. Potable water taps shall be made with a tapping machine designed for the pipe material being tapped. Other makes of tapping machine may be used upon prior approval of the ECUA Inspector or Engineer.

3.7 TAPS ON PRESSURIZED LINES

The contractor shall perform taps on pressurized lines for the installation of pipes other than service lines of 2-inch and smaller PE tubing in accordance with these requirements:

Materials

All materials used for taps on pressurized lines shall meet the requirements of these specifications. Tapping sleeves shall be properly sized for the pipe being tapped. (See Sec. 2.4.1.6) Resilient seated tapping valves shall be furnished with special end connections. (See Sec. 2.4.2.2) All other material used to accomplish the tap shall meet the standards set forth by the AWWA for potable water construction.

Procedure

The contractor shall notify the ECUA Inspector three working days in advance of work. The contractor shall in the presence of an ECUA inspector:

A. Expose the existing pipe at the location shown on the plans, and clean the section of the pipe to receive the tapping sleeve.

B. Check the tapping sleeve and valve for defects and make sure the gate fully retracts in the valve to allow the shell cutter free passage.

C. Assemble the tapping sleeve on the pipe, then install the tapping valve.

D. Hydrostatically pressure test the tapping sleeve and valve after it has been assembled on the water main using the test plug on the sleeve. The test shall be 150 psi minimum. The duration of the test shall be 15 minutes.

E. Pour a thrust block behind the tapping sleeve sufficient to withstand the pressure of the new line. Also, provide a concrete pad sufficient to support the weight of the sleeve, valve, and tapping machine. Refer to Section 3.3.9 and ECUA Standard Detail D-43. Concrete shall be in place a minimum of 24 hours prior to testing the main installation.

F. Assemble an approved tapping machine and proceed to make the necessary cut in accordance with the recommendation of the tapping machine manufacturer. Approved tapping machines shall be:

1. In good working condition.
2. Designed for and have a cutting bit for the pipe material to be cut.
3. Equipped with a depth of cut gauge.
4. Designed to capture the coupon.
5. Equipped with the manufacture's recommended diameter shell cutter for the tap to be made.
6. Tapping machine power head to be hydraulic or pneumatic drive; use of electric motor drives expressly prohibited.
7. Tapping maching shall be disinfected prior to each use for potable water taps.

Nominal Main Size	Tapping Valve ID AWWA Standard	Tapping Machine Shell Cutter OD
2-inch	2 1/8-inch	1½ -inch
3-inch	3 1/8-inch	2½-inch
4-inch	4 1/4-inch	3½ -inch
6-inch	6 1/4-inch	5½ -inch
8-inch	8 1/4-inch	7½ -inch
10-inch	10 1/4-inch	9½ -inch
12-inch	12 1/4-inch	11½ -inch
14-inch	14 1/4-inch	Per Manufacturer's Recommendation.
16-inch	16 1/4-inch	Contractor shall submit shop drawings for valves and tapping machine for approval, prior to use. Per Manufacturer's Recommendation.
18-inch	18 1/4-inch	
20-inch	20 1/4-inch	
24-inch	24 1/4-inch	

G. Tap coupon shall be given to the ECUA Inspector. If the coupon is lost in the main, contractor shall, at his expense, dismantle main to retrieve the coupon. Main will be reassembled, pressure tested and bacteriological tests retaken as required at contractor's expense.

PART 4: ACCEPTANCE REQUIREMENTS

4.1 INSPECTION

Upon completion of the installation, the system shall be inspected to ascertain that valves, fittings, fire hydrants, flush hydrants, etc. are located in conformance with the plans, and confirm that all 'as-built' measurements have been accurately taken. The ECUA Inspector shall observe all appropriate activities related to properly placing the line in service including flushing, pressure and leakage testing, disinfection, and bacteriological sampling. Final connections and testing of fire hydrants shall be accomplished after final clearance of lines. Tracer wire shall be tested for continuity by the contractor with the ECUA Inspector present. The contractor, with the ECUA Inspector, shall make sure all main valves and hydrant valves are open.

4.2 FLUSHING

All newly installed water lines shall be flushed with potable water to remove any sediment, solids and/or foreign matter prior to testing. ECUA will make water available to the contractor. Flushing shall be conducted at a sufficient velocity to clear the pipe. Discharge of flushing water must be through a 2-inch diameter pipe (or larger) and must be controlled so as not to cause any property damage. Flush water source connection shall incorporate backflow preventor when required by the ECUA Inspector or Engineer.

4.3 PRESSURE/LEAKAGE TEST

4.3.1 General

All newly installed water lines and appurtenances shall be pressure/leak tested to assure the strength of materials and quality of workmanship of the installation. Testing shall be conducted in accordance with ECUA Standard Detail D-12 and the requirements of AWWA Manual 23 for PVC and other flexible pipe or AWWA C600 for Ductile Iron Pipe. Leakage testing may be conducted concurrently with the pressure test.

4.3.2 Procedure

Contractor shall notify the ECUA Inspector three ECUA working days prior to a scheduled test. Tests are to be conducted in segments not to exceed three thousand (3,000) feet of pipe. Water in the new line shall be pumped up to a pressure of 150 psi minimum. This pressure shall be maintained for a minimum of one (1) hour by pumping a quantifiable amount of water into the line and record the amount of water added during the test period. This represents the leakage.

Pressure/leakage tests shall be deemed acceptable when leakage does not exceed that determined by the following formula:

$$L = \frac{SD\sqrt{P}}{133200} \text{ (or 11.65 gpd/mi/inch/dia)}$$

or $$L = \frac{ND\sqrt{P}}{7400} \text{ for DI pipe 18' lengths}$$

or $$L = \frac{ND\sqrt{P}}{6600} \text{ for PVC pipe 20' lengths}$$

where: L = Maximum leakage, in gallons per hour.
S = Length of pipe under test, in feet.
N = Number of pipe joints in segment under test.
D = Nominal internal diameter of pipe, in inches.
P = Average actual leakage test pressure, psig.

Record all data for submission with as-built plans.

An ECUA Construction Inspector shall be present during test.

Refit and replace all pipe not meeting the leakage requirements. Repair clamps are not permitted.

Repair all visible leaks regardless of the amount of leakage.

When a satisfactory pressure/leakage test has been completed, reduce the pressure at or below normal line pressure, and continue on with line disinfection.

4.4 DISINFECTION

4.4.1 General

The contractor shall provide all equipment, materials and testing apparatus required to perform disinfection in accordance with AWWA 651, ECUA Standard Detail D-12, or as modified herein.

4.4.2 Procedure

A. Prior to beginning disinfection, the contractor shall submit information to the engineer for approval of proposed materials and methods. ECUA will determine the number and location of all sampling points. Temporary sampling taps may be required consisting of a corporation cock with copper tube.

B. Add chlorine to attain an initial concentration of 25 mg/l chlorine with 10 mg/l remaining after 24 hours.

1. Initial concentration is to be obtained by mixing proper amount of HTH granules (65% Cl) into auxiliary tank, then pump/meter into regulated flow into or through the pipe section.

2. Alternate methods of disinfection by use of granular or tablet forms of chlorine will not be allowed. The "SLUG" method as described in AWWA 651 will not be allowed.

3. Check the chlorine concentration at all sampling points after the line has been filled and air expelled.

4. Check residual chlorine concentration at the end of 24 hours to confirm that 10 ppm (minimum) is present.

C. ECUA shall supply water for testing from the nearest available source. Flush main until chlorine concentration is 2 mg/l or less prior to taking bacteriological samples. Contractor shall provide a backflow preventor device as required by the ECUA Inspector or Engineer.

1. Check concentration at all sample point locations.

2. Disposal of chlorinated water shall be the contractor's responsibility and shall be done without damage to public or private property. Chlorinated water disposal shall meet all State, Federal and local regulations.

D. Contact ECUA for collection of samples. Two (2) satisfactory bacterial sample sets taken 24 hours apart must meet State requirements before placing the main into service.

E. Repeat flushing and disinfection procedure should initial disinfection fail to yield acceptable bacteriological results at no additional cost to the Owner.

4.5 OTHER CONNECTIONS

After new system piping has been satisfactorily tested and cleared for use, make any approved additional connections to the pre-existing distribution system. Exercise care in making connection and disinfect as needed. When total system is approved for use, an ECUA Inspector shall verify that the contractor has opened all interior valves as required. Valves connecting new installations to ECUA's existing distribution system shall then be opened by an ECUA Inspector.

4.6 TESTING FIRE HYDRANTS

All newly-installed fire hydrants shall be flow tested by ECUA prior to final acceptance in accordance with established procedures. (Refer to AWWA-M17 and AWWA C502.) Static Leak Test of hydrant shall be done in conjunction with Section 4.3 with hydrant valve open.
Hydrant flow tests not meeting the minimum requirements of ECUA's Design Standards shall be immediately reported to the Engineer-of-Record. The system shall not be placed into service until the system meets the minimum requirements.

PART 5: MEASUREMENT AND PAYMENT

5.1 GENERAL

Measurements shall be made to the nearest tenth of units and rounded to the nearest whole unit when totaled. Payments shall be for providing all labor, tools, equipment and materials as needed for: 1) furnishing, handling, and installing the required materials, fittings or fixtures; 2) excavation, backfill and compaction, including shoring, bracing and dewatering as required; 3) temporary removal and replacement of existing obstacles, including minor relocation and repair of other utilities; and 4) all required testing, disinfection and flushing. Payment for water main installations shall include the installation of tracer wire.

5.2 WATER MAINS

Water mains shall be measured in lineal feet by the specified pipe size along the pipe centerline with no deduction for fittings. Payment shall be based on the contract unit price per lineal foot.

5.3 APPURTENANCES

Water main appurtenances include fittings and valves as outlined in Section 2.4 of the specifications. Incidental appurtenances such as joint restraints, couplings, tracer wire, etc. are not considered separate pay items and their cost should be included in the unit price of the installed pipe.

5.3.1 Fittings

Water main fittings including bends, reducers, tees, wyes, tapping sleeves, expansion joints, pipe hangers/supports, and cut in sleeves shall be measured and paid for on a unit (per each) basis. Fittings shall be listed by size and type.

5.3.2 Valves

Water main valves inclusive of any required valve boxes or other appropriate appurtenances shall be measured and paid for on a unit (per each) basis. Valves shall be listed by size and type.

5.3.3 Line Stops

Line stops shall be measured and paid for on a unit (per each) basis.

5.4 HYDRANTS AND FLUSHING EQUIPMENT

Hydrants and flushing equipment shall be measured and paid for on a unit (per each) basis to include a complete installed assembly.

5.4.1 Fire Hydrants

Fire hydrant assemblies shall include the installed water main tee or tapping sleeve, lead valve and box, connectors (up to 10 feet of lateral distance), gravel pack, and hydrant.

5.4.2 Fire Hydrant Appurtenances

Fire hydrant appurtenances including extensions and off-site connectors shall be measured and paid for on a unit (per each) basis.

5.5 WATER SERVICE LINES

5.5.1 Service Lines (up to 2-inch diameter)

Water service lines shall be measured and paid for on a unit (per each) basis. Each service line installation shall include the main tap, corporation stop, service tubing, and curb stop. Service lines shall be listed by tubing size and nominal length. Nominal length shall typically be categorized as "short" (for services on the same side of the street as the water main), and "long" (for services on the opposite side of the street from the water main).

5.5.2 Large Service Lines (3-inch diameter and larger)

Large service lines, including fire lines, shall be measured and paid for in accordance with the requirements for water mains (see 5.2 and 5.3 above).

5.6 TAPS ON PRESSURIZED LINES

Taps on pressurized lines shall be measured and paid for on a unit price (per each) basis to include tapping sleeve, tapping valve, and valve box complete, in-place. Taps shall be listed by main and branch diameters.

SECTION 2570

SANITARY SEWERS

PART 1: GENERAL

1.1 Related Requirements Specified Elsewhere

A. Trenching, Backfilling and Compacting: Section 2221.

B. Pipe Boring and Jacking: Section 2224.

1.2 Product Delivery, Storage and Handling

A. Store materials to prevent physical damage.

B. Protect materials during transportation and installation to avoid physical damage.

1.3 General Description of Work Covered

Furnish and install all sewer pipe, fittings and structures, and accessories required for sanitary sewer construction as indicated.

1.4 Quality Assurance

Comply with latest published editions of American Society of Testing and Materials (ASTM) Standards:

A. ASTM C478 - Concrete Pipe Manholes.

B. ASTM D1784 - Rigid Poly (vinyl chloride) (PVC) Compounds and Chlorinated Poly (vinyl chloride (CPVC) Compounds.

C. ASTM D2321 - Practice for Underground Installation of Flexible Thermoplastic Sewer Pipe.

D. ASTM D2564 - Solvent Cements for Poly Plastic Pipe and Fittings.

E. ASTM D3212 - Joints for Drain and Sewer Plastic Pipes using Flexible Elastomeric Seals.

F. ASTM D3034 Type PSM - PVC Sewer Pipe and Fittings.

PART 2: MATERIALS AND EQUIPMENT

2.1 General Requirements

A. Pipe furnished shall be PVC for sanitary sewer construction unless shown otherwise on plans or bid forms.

B. All pipe shall be marked in accordance with applicable standard specification under which pipe is manufactured unless otherwise specified.

2.2 Delivery, Storage and Handling

Certificates of Compliance with the Specifications shall be required for all materials used on the Project. All materials shall be protected during transportation, storage, handling, and installation to avoid physical deterioration due to sun and weather. The ECUA reserves the right to reject material which in any way does not meet the requirements of these Specifications.

2.3 Sewer Mains

2.3.1 Polyvinyl Chloride Plastic Pipe (PVC)

A. Comply with ASTM D3034 for pipe using material conforming to ASTM D1784 for pipe and fittings.

B. Use single elastomeric gasket push-on joints complying with ASTM D3212.

C. Provide pipe and fittings with minimum SDR-35 dimension ratio.

D. SDR 35 shall be used for service laterals.

E. Pipe shall be color coded by one of the following methods:

1. 3 green stripes (½ inch high) with permanent ink along the entire length, evenly spaced around the pipe, with the word "Sewer" in ¾-inch letters every 21 inches along each stripe.

2. Use pipe pigment to color code pipe green.

2.2.1 Glass Fiber Reinforced Thermosetting Resin Pipe

A. Acceptable for lines I8 inches diameter and larger.

B. Use pipe to comply with AWWA C950 (Latest Edition).

C. Use minimum pipe stiffness: 36 psi.

D. Use joints per AWWA C950 (Latest Edition).

E. Pipe shall be color coded by one of the following methods:

1. 3 green stripes (½ inch high) with permanent ink along the entire length with ¾-inch letters every 21 inches along each stripe designating "Sewer".

2. Use pipe pigment to color code pipe green.

2.4 Structures and Pipe Accessories

2.4.1 Fittings

A. Fittings shall be allowed only on service laterals and drop manholes.

B. Fittings shall equal or exceed quality and strength of pipe.

C. Wyes shall be long bell type.

2.4.2 Manholes & Sections

A. Construction shall be precast reinforced concrete capable of sustaining an H-20 loading.

B. Manholes shall be constructed in accordance with ASTM C-478, using Type II or Type III Portland Cement.

C. Leakage shall not exceed 1 gallon per day per vertical foot of manhole.

D. Manholes shall have a minimum I.D. of 48 inches, unless otherwise noted on plans.

E. Base section shall be monolithic to a point 6" above the crown of the incoming pipe with minimum thick bottom section and 5" wall section and made in accordance with ASTM C-478.

F. Pipe holes shall be properly located and either cast in place with appropriate boot or required shape, or core drilled after concrete has set. Minor field adjustments may be made with approval of ECUA. The invert of the lowest pipe shall be a minimum of 4" above the inside floor of the base section.

G. Cone (top) sections shall be eccentric narrowing from 48" to 24" I.D., unless otherwise noted on plans.

H. Flat top sections shall be used in place of cone sections for manholes less than 5 feet deep. The access hole shall be offset to allow easy access to steps (if used) and shall be reinforced to support an H-20 loading.

I. Shallow manholes less then 3 feet deep shall be constructed according to ECUA detail drawing.

J. The joints between sections shall be one of the following:

1. Lap joint design with the upper lip inside and suitably shaped to accommodate a bitumastic joint sealer,

2. Rubber "O" ring gasket.

K. Pipe to manhole seals shall be made utilizing one of the following or approved equivalent.

1. Kore-N-Seal or, Lock-Joint, with stainless steel bands and screws.

2. A-LOK.

L. Brick manholes shall only be used with consent of ECUA.

2.4.3 Manhole Accessories

A. Manhole Lid and Cover

1. Gray cast iron, with nominal opening of 24 inches.

2. Cover shall be embossed with "SANITARY SEWER" as shown on detail drawings.

3. The lifting holes shall not extend through cover.

4. Use Vulcan Model VM-37, USF 170E or approved equivalent for lids not requiring bolting features.

5. Use Vulcan Model VM-360WT or approved equivalent for bolted covers.

6. Use Vulcan Model VM-50 or approved equivalent for specified flood areas.

7. Use Certain Teed RE 85 R3 FD with Anti-theft locking key (RE 80 K9 FD) for lids requiring locking features.

B. Manhole Coating

1. Apply two coats of a foundation coating or approved equivalent to the interior and to the exterior.

2. Manholes receiving discharges from force mains, and at a minimum the next two manholes downstream of the receiving manhole, shall be lined with an ECUA approved HDPE or polypropelene liner. Additional manholes shall be lined if required by ECUA. Other liners may be installed if approved by ECUA in writing.

3. Manholes housing force main air release valves shall be lined with an ECUA approved HDPE liner. Other liners may be installed if approved by ECUA in writing.

C. Steps

1. Shall be embedded in the concrete by the manhole manufacturer at 12" on center spacing from the top of the manhole cone to bench.

2. Steps shall be grade 60 steel bar reinforced ABS plastic, with non-slip rungs, guaranteed for use in sewers.

PART 3: EXECUTION

3.1 General

Provide all labor, equipment and materials and install all pipe, fitting, specials and appurtenances as indicated or specified.

3.2 Pipe Installation

A. Handling

1. Handle and store pipe in a manner to insure installation in sound and undamaged condition, and in accordance with pipe manufacturer's requirements.

a. Do not drop, bump, roll or drag.

b. Use slings, lifting lugs, hooks and other devices designed to protect pipe, joint elements, and coatings.

2. Ship, move and store with provisions to prevent movement or shock contact with adjacent units.

3. Handle with equipment capable of work with adequate factor of safety against overturning or other unsafe procedures.

B. Installation

1. Utilize equipment, methods, and materials insuring installation to lines and grades as indicated.

   a. Do not lay on blocks unless pipe is to receive total concrete encasement.

   b. Use calibrated laser or minimum of 3 batter boards for control of line and grade.

2. Install pipe of size, material, strength class, and joint type with embedment shown for plan location.

3. Insofar as possible, commence laying at downstream end of line and install pipe with bell ends in direction of laying (upstream). Sewer pipe shall have spigot ends in direction of flow. Obtain approval for deviations therefrom.

4. Clean interior of all pipe, fittings and joints prior to installation. Exclude entrance of foreign matter during discontinuance of installation.

   a. Close open ends of pipe with watertight plugs at the end of each work day.

   b. Do not let water enter trench. Pipe shall be laid in a dry trench. Include provisions to prevent pipe flotation and displacement should water control measures prove inadequate.

   c. Remove water, sand, mud and other undesirable materials from trench before removal of end cap or plugs.

5. Inspect pipe prior to installation to determine if any pipe defects are present.

6. Brace or anchor as required to prevent displacement after establishing final position.

7. Perform only when weather and trench conditions are suitable.

8. Observe extra precaution when hazardous atmospheres might be encountered, especially when connecting to existing, active sanitary sewers.

9. Separation Of Sanitary Sewer Lines and Potable Water Lines.

   a. When a gravity sewer line must cross under a water line with less than 18-inch vertical clearance, one of the following methods may be used:

      1) Fully encase sewer line with a minimum of 4 inches of concrete (2500 psi) for a minimum distance of 10 feet either side of the point of crossing, which must be at least 5 feet from a water line joint. If the crossing is other than at right angles, increase the

length of encasement so that the end of the encasement will be at least 12 feet from a water line joint.

2) Use equally rated pressure pipe for the sewer lines with no joints closer than 12 feet apart and at least 6-inch vertical clearance.

3) Install sewer pipe into at least a 20-foot section of steel casing (casing I.D. slightly larger than sewer pipe bell OD) and center over crossing so that end of casing will be at least 12 feet from water line joint. Seal the ends of the casing with non-shrink grout.

b. When a gravity sewer line must cross over a potable water line, regardless of clearance, because the water line cannot be relayed above sewer, use method 2) or 3) in subsection a. Concrete encasement will not be allowed.

c. When a sanitary force main must cross under a potable water line with less than an 18-inch vertical clearance, or over the water line, use a higher rated pressure pipe as in method 2) or 3) in subsection a.

d. When the water line being crossed in a, b or c is a house or building service lateral, 2-inch or smaller and the service lateral is a continuous piece of PE DR9 tubing, then the above rules do not apply; but locate so that the distance to a sewer or force main joint is as great as possible.

e. When a gravity sewer line must run parallel to and less than 18 inches below a potable water line and:

1) 6 to 10 feet apart for less than 40 feet, use method 1), 2) or 3) in subsection a.

2) 6 to 10 feet apart for over 40 feet, use method a. 2) and stagger joints.

3) 3 to 6 feet apart for any distance, use a higher rated pressure pipe as in method a. 2).

f. When a sanitary force main must run parallel to and less than 18 inches below a potable water line and:

1) 6 to 10 feet apart for any distance, use a higher rated pressure pipe as in method a. 2).

2) 3 to 6 feet apart, use a higher rated pressure pipe for both water and force main. Example: If force main is PC160 PVC DR26, and water line is C-900 DR25; then force main should be PVC DR21 and water line should be DR21, using extreme care to have both properly color-coded.

10. Auger or jack casing in place where shown on plans.

11. Maintain minimum of 30 inches of cover unless directed by Engineer.

12. Encase sewer pipe in steel casing or use ductile iron pipe when crossing under pipe, conduit, or structure of 24 inches in diameter or greater when a 6-inch

separation distance cannot be maintained. This protection shall extend a minimum of 5 feet beyond crossed structure.

C. Jointing

General Requirements

1. Perform in accordance with manufacturer's recommendations.

2. Clean and lubricate all joint and gasket surfaces with lubricant recommended.

3. Utilize methods and equipment capable of fully homing or making up joints without damage.

4. Check joint opening and deflection for specification limits.

D. Closure Pieces

1. Connect two segments of pipelines or a pipeline segment and existing structure with short sections of pipe fabricated for the purpose.

2. Observe specifications regarding location of joints, type of joints and pipe materials and strength classifications.

E. Temporary Plugs

1. Furnish, install and secure water tight temporary plugs at each end of work for removal by others when completed ahead of adjacent contract or where indicated.

2. Remove from pipe laid under separate or prior contract in order to complete pipe connection when work by other contractor is finished prior to work at connection point under this contract.

3. Permanent Plugs

a. Use test plugs as manufactured by pipe supplier, or

b. Fabricate by Contractor of substantially same construction.

c. Must be watertight against heads up to 20 feet of water.

d. Secure in place in a manner to facilitate removal when required to connect pipe.

3.3 Manhole Installation

A. Precast Bases

1. Place on 12-inch layer of compacted sand, gravel or sandy material as approved by Engineer.

2. Base shall be leveled prior to installation of manhole sections.

B. Cast In Place Bases

1. Cast on 12-inch layer of compacted sand, gravel or sandy material as approved by Engineer.

2. Manhole bases and channel inverts may be constructed integrally.

C. Manhole Sections

1. Use precast sections unless cast-in-place manholes approved by Engineer.

2. Precast sections may be installed after base concrete has attained 75% of design strength.

3. Full circumference seals between manhole sections shall use one of the following or approved equivalent.

   a. Bitumastic Seal (Kent No. 2, Ram Neck)

   b. Rubber "O" ring gasket

D. Invert Channels

1. Form invert channel as indicated.

2. Alternate invert and shelf may be constructed of mortar over concrete fill with approval of Engineer.

3. Make changes in direction of flow with smooth curves of as large a radius as size of manhole permits.

4. Make changes in size and grade smoothly and uniformly.

5. Slope shelf of manhole adjacent to channels, toward the channels, and rough broom finish to provide a non-slip surface.

6. Finish channel bottom smoothly without roughness, irregularity, or pockets.

7. On straight through single pipe manholes, half sections of same pipe may be used with mortar and concrete with approval of Engineer.

8. Precast inverts in base sections are acceptable with approval from ECUA Engineering Department.

E. Pipe Connection Into Manholes

1. Make watertight.

2. Use specified pipe to manhole seals or other as approved by ECUA.

F. Field applied coatings shall be applied after Engineer's approval of structure.

3.4 Service Connections

A. Service lines shall be located in accordance with requirements in the ECUA Code. Refer to the Code for clarification of availability of facilities and responsibilities of customer for the installation of service lines.

B. Install service connections to each residential lot or individual business lot or property, or as directed by Engineer.

C. Services wyes: install long bell type wyes, 4-inch branch diameter unless shown otherwise on plans. See ECUA standard detail, "Typical Service Connection".

D. Risers: may be used with wyes for service connections where invert of sewer is 7 feet or more below ground surface or where shown on plans. Terminate each connection as shown on plans or as directed by Engineer. Glued 45 degree bends may be used on end of lateral, within grassy, or unpaved, areas.

E. Glue cap on end of stub out.

F. Backfill trench only after recording exact location and depth of service connection.

G. Street crossings shall have a minimum of 2 feet of cover to subgrade unless approved by Engineer.

H. Drive a ½-inch metal rebar adjacent to each service connection, with top of post 1 foot below ground surface.

3.5 Connection of Service Lines and Sewer System Facilities

A. Existing Service Lines and New Sewer Main:

Connect existing sanitary service lines which cross new sewer line through equal sized wye.

B. New Service Line Connections to Existing Manholes:

1. Insert new sewer pipe flush with inside of manhole.

2. Connect new lines to existing manholes. Seal new pipe in place to be watertight.

3. Reconstruct manhole channel and shelf to suit new connection.

4. All debris to be removed.

C. Connections to Existing Sewer

1. Build new manhole around existing sewer.

2. Break out existing sewer inside of manhole and construct channel and shelf to suit new connection.

PART 4: ACCEPTANCE

4.1 Acceptance Tests for Sewer Pipelines and Manholes

A. Infiltration Testing

1. General

a. Maximum infiltration for each section of sewer pipe shall not exceed 25 gal/mile/day/ inch of pipe diameter.

b. Infiltration, exfiltration or air test may be used to prove compliance with infiltration requirement.

c. Acceptance of air test or exfiltration results will not preclude rejection of work if infiltration is measured and exceeds limitation.

d. Maximum infiltration for each manhole shall not exceed 1 gallon per vertical foot per 24 hours.

e. All tests to be witnessed by ECUA.

2. Air Test

a. Furnish all facilities required including:

1) Necessary piping connections.

2) Test pumping equipment.

3) Pressure gauges or manometers.

4) Bulkheads.

5) All miscellaneous items required.

b. Obtain approval from Engineer of equipment and methods proposed for use.

c. Test pipe in sections determined by Contractor and approved by Engineer.

d. Plug ends of line and cap or plug all connections to withstand internal test pressures.

e. Introduce low pressure air until internal air pressure is 4.0 psi greater than the average back pressure of ground water above the pipe. (Add 0.43 psi for each vertical foot of ground water over the top of pipe.)

f. Allow two minutes for air pressure to stabilize.

g. Time required for pressure to decrease from 3.5 to 2.5 psi greater than average back pressure of any ground water above pipe shall not be less than time in following table for given diameters.

Pipe Diameter	
(Inches)	Minutes
6	3.0
8	4.0
10	5.0
12	5.5
15	7.0
18	8.5
21	10.0
24	11.5
27	12.75
30	14.0
36	17.0

h. Repeat test as necessary after all leaks and defects have been repaired.

B. Exfiltration Test

1. Furnish all facilities required to plug pipe sections and fill with water to attain a minimum elevation of water in upstream manhole two feet higher than top of pipe in line being tested, or two feet above existing ground water in trench, whichever is higher elevation.

2. Maintain water level in manhole at start of test period for one hour.

3. Water added to maintain level (water lost) shall not exceed the following amounts:

   a. 8" pipe - 0.63 gallon per 100 feet.

   b. 10" pipe - 0.79 gallon per 100 feet.

   c. 12" pipe - 0.95 gallon per 100 feet.

   d. 15" pipe - 1.19 gallon per 100 feet.

   e. 18" pipe - 1.42 gallon per 100 feet.

   f. 21" pipe - 1.66 gallon per 100 feet.

   g. 24" pipe - 1.90 gallon per 100 feet.

   Allowable leakage may be increased by 5% for each foot of head above water elevation indicated above.

C. Infiltration Test

1. May be used in lieu of air test or exfiltration test if contractor can prove that ground water conditions are such that crown of pipe is covered with not less than two feet of water at highest point in section being tested. The test head shall be maintained for not less than 24 hours before a weir measurement is made.

2. Infiltration shall be measured with weir at manhole and shall not exceed amounts stated in paragraph B. 3., Exfiltration Test.

3. Engineer will require exfiltration or air test if contractor cannot prove to satisfaction of Engineer that ground water conditions are satisfactory.

PART 5: MEASUREMENT AND PAYMENT

5.1 Sewer Pipe

A. Measure in lineal feet by specified pipe size along centerline of pipe with no deduction for manholes, wye connections or riser connections.

B. Includes furnishing, handling, laying pipe materials and specified bedding materials; trench excavation, backfill and compaction; dewatering; sheeting, shoring and bracing; testing; utilities repair and relocation; providing all labor, tools, equipment and miscellaneous associated work necessary to complete item.

C. Payment: unit price per lineal foot.

5.2 (Standard) (Drop) (Shallow) Manholes

A. Includes furnishing and placing all precast and cast in place materials; excavation, backfill and compaction; frame and lid; stub pipes; providing all labor, equipment, tools and miscellaneous associated work needed to complete item.

B. Payment: unit price for each manhole.

5.3 Wye Connections

A. Measure each as installed by nominal pipe size.

B. Includes additional cost of wye over straight pipe, joints, stoppers and one 1/8 bend sweep.

C. Payment: unit price per each.

5.4 Riser Connections

A. Measure each connection installed by nominal pipe size.

B. Includes furnishing and installing wye or tee connection, elbows, concrete work, extra excavation, backfilling and compaction, stoppers and providing labor, equipment and miscellaneous associated work needed to complete item. Does not include straight pipe used for riser.

C. Payment: unit price per each.

5.5 Riser Pipe

A. Measure in lineal feet of straight pipe from fitting joints at upper and lower extreme of riser.

B. Includes furnishing and installing pipe materials, bracing; supports; excavation, backfill and compaction; providing labor, equipment and miscellaneous associated work needed to complete item.

C. Payment: unit price per lineal foot.

5.6 Service Connection Lateral Pipe

A. Measure in lineal feet by nominal pipe size as installed.

B. Includes furnishing, handling, laying pipe materials; trench excavation, backfill and compaction; dewatering; utilities repair; providing all labor, equipment and miscellaneous associated work needed to complete item.

C. Payment: unit price per lineal foot.

5.7 Clean Outs/Lamp Holes

A. Includes furnishing and placing all clean outs; excavation, backfill and compaction; stub pipe; frame and lid; providing all labor, equipment, tools and miscellaneous associated work needed to complete item.

B. Payment: unit price for each clean out.

02575 - WASTEWATER LIFT STATION

PART 1: GENERAL

1.1 SCOPE OF WORK

A. The Contractor shall furnish, install, test and place in operation the sewage pumping station shown on the approved drawings and specified hereinafter. All applicable sections of the ECUA Water and Sewer Standards shall be considered part of this work. All references to Industry Standards (ASTM, ANSI, etc.) shall be to the latest revision unless otherwise stated. Only those materials included in the ECUA Water and Sewer Standards Manual, (including, but not limited to, submersible pumps, VFD equipment and control panels), shall be installed. All materials shall be new unless specifically called for otherwise. All structures, pumps and panels shall require a complete shop drawing submittal for ECUA's review and approval.

1.2 SUBMITTALS

A. Actual catalog data, brochures and descriptive literature will be required for wet well, pumps, piping, valves, and rebar spacing at a minimum as specified herein. The wet well manufacturer shall provide up-lift calculations (signed and sealed by a Florida Registered Professional Engineer) for the wet well. Groundwater level shall be assumed to be at grade unless specific geotechnical exploration indicates the groundwater level should be assumed at a lower elevation. However, in no case shall the groundwater elevation be considered at lower than one-half the depth of the wet well.

B. Submit under provisions of the General Provisions.

1. The Contractor installing all work shall review and approve all shop drawings prior to submittal to the Engineer for review. As part of the review, the contractor shall certify the following and include this statement on each submittal:
   a. I hereby certify that the equipment and devices shown and marked in this submittal are in compliance with the contract drawing and specifications, can be installed in the allocated space, will be stored in accordance with the manufacturer's recommendation and is submitted for approval.

Certified by: _____ Date: _____

C. Submit six (6) sets of shop drawings and product data grouped to include complete submittal of related systems, products, and accessories in a single submittal. No lift station work may be performed until shop drawings are approved. Submit Shop Drawings on the following systems as grouped below:

1. Wet Well
   a. Flotation Calculations (Signed and Sealed by Florida Registered P.E.)
   b. Base Thickness and Compaction Requirements
   c. Pipe Invert Elevations
   d. Pump Mounting Base
   e. Warranty Information
   f. Aluminum Hatches and Locations
   g. Safety Grating
   h. Orientation Diagram
2. Concrete Rebar Spacing Drawings
   a. Lift Station Base and Top Slabs
   b. Generator Slab
   c. SCADA Antenna Base
   d. Control Panel Base
   e. Concrete Pipe Supports
3. Submersible Pumps
   a. Pump Curve (Variable Speed and Fixed Speed)
   b. NPSH Curves
   c. Horsepower Curves
   d. Efficiency Curves
   e. Pump Efficiency (Pump and Motor Efficiency Provided Separately)\
   f. Pump Cables
   g. Pump Materials
   h. Base Elbow
   i. Guide Rail System
   j. Lifting Bales
4. Piping and Appurtenances
   a. Plug Valves
   b. Check Valves
   c. Backflow Prevention Device
   d. Stainless Steel Riser Piping and Fittings
   e. Pipe Bracing
   f. Float Hangar Rod Assembly
   g. Floats
   h. Level Transducer
   i. Flow Meter (if applicable)
   j. Pressure Transmitter
   k. Air Release Valves
   l. Pipe Supports and Location Schematic

5. Miscellaneous Mechanical Equipment
   a. Miscellaneous Mechanical Parts

D. Mark dimensions and values in units to match those specified.

1.3 RELATED REQUIREMENTS SPECIFIED ELSEWHERE

A. Excavation, Backfilling and Compaction: Section 02221
B. Water Distribution Lines/Service Lines: Section 02556
C. Gravity Sanitary Sewer: Section 02570
D. Sanitary Force Main: Section 02576
E. Fiberglass Wet Well: Section 02577
F. Fencing: Section 02830
G. Cast-in-Place Concrete: Section 03300
H. Electrical - Sections 16010-16050

1.4 QUALITY ASSURANCES

Comply with the latest published editions of AWWA and ASTM Standards

A. AWWA C515 - Gate Valves for Water & Sewerage Systems
B. AWWA C509 - Swing Check Valves for Waterworks
C. AWWA C151 - Ductile Iron Pipe
D. ASTM A746 - Ductile Iron Pipe
E. ASTM C478 - Concrete Pipe Manholes
F. ASTM D2241 - Poly Plastic Pipe
G. ASTM F477 - Elastomeric Seals for Plastic Pipe

PART 2 - WARRANTY

2.1 CONTRACTOR WARRANTY

A. The Contractor shall supply to ECUA a two (2) year unconditional warranty after final acceptance or any designated portion thereof. The warranty shall include materials and installation and shall constitute complete replacement and delivery to the site of materials and installation of same to replace defective materials or defective workmanship with new materials/workmanship conforming to the specifications.

2.2 FIBERGLASS WET WELL MANUFACTURER WARRANTY

A. The fiberglass wet well manufacturer shall warrant the wet well against defects for at least twenty (20) years after final acceptance of the lift station by

ECUA for operation and maintenance. Defects are defined as cracking, delamination or leaking. The warranty shall require the manufacturer to supply all necessary labor, materials, and equipment to repair defects to satisfaction of ECUA. The Contractor and/or manufacturer shall not make any exemption or exception to the above stated conditions or warranty.

2.3 PUMP MANUFACTURER WARRANTY

A. The manufacturer shall warrant to ECUA for permanent installation in municipal sewage service submersible pump and motor against defects in materials and workmanship including normal wear and tear to the following parts for a period of 5 years after final acceptance of the lift station, mechanical seals, bearings, shafts, motor electrical cables and motor stators.

B. The warranty shall include no less than 100% coverage for original equipment manufactured (OEM) parts and in-shop labor for pump/motor repairs for the full 5 years at NO COST to ECUA. This warranty shall not apply to parts that fail due to abuse, neglect, mishandling, or acts of God.

C. Verification of guarantees of performance and warranty certificate shall be indicated in the shop drawing submittal and in the operation and maintenance manuals and disks (Adobe Acrobat or Microsoft Word).

D. The pump distributor shall employ and make available proficient manufacturer-authorized service technicians to perform service calls to pumps supplied to ECUA. Service personnel shall adhere to all ECUA Safety Rules & Regulations and be trained and certified for confined space entries and carry liability and workers compensation insurance.

E. During the warranty period, the pump distributor shall, at no cost to ECUA, repair the subject pump. The location address, contact names, phone numbers, (including emergency, mobile, etc.) and fax numbers of the manufacturer-authorized warehouse and warranty service center shall be indicated in the shop drawing submittal and in the operation and maintenance manuals and disks (Adobe Acrobat or Microsoft Word).

PART 3 - GENERAL REQUIREMENTS

3.1 PROJECT SCHEDULE AND COOPERATION

A. The project schedule shall be established on the basis of working a normal work schedule including five days per week, single shift, eight hours per day or four days per week, single shift, ten hours per day, except for ECUA recognized holidays. Unless approved otherwise by ECUA, normal or general

items of work such as setting wet well, field pump test, density testing and final inspections, shall be scheduled during the normal work schedule. Due to operational and manpower limitations on the ECUA systems, ECUA may require the contractor to perform work outside of the normal work schedule. These operational and manpower limitations, including but not limited to, tie-in work (cut-in work or other work) and other phases of the work which may impact the continued (non-interruptible) service to existing ECUA customers. The contractor shall plan and anticipate the cost impact of these systems limitations and provide such work or services at no additional cost to ECUA. Unless approved otherwise, an ECUA representative shall be present to observe the excavated area prior to setting (installing) the wet well. The date and time for setting (installing) the pre-cast or fiberglass wet well shall be reviewed and approved by ECUA, prior to the actual work.

3.2 AS-BUILT DRAWINGS

A. As-built drawings are required on all sewer, force main and pump station projects, including projects for ECUA, City of Pensacola, Escambia County, DOT, private developments, and other Authorities, etc. As-built drawings shall be reviewed and approved by ECUA. The cost to provide as-built drawings shall be included as part of the related work requirements or general conditions for the utility work. **Contractor shall submit "As Built" drawings and operation and maintenance manuals before lift station start-up, no exceptions.**

3.4 WORKMANSHIP

A. Materials: All work shall be constructed in accordance with the drawings and specifications. All defects disclosed by tests and inspections shall be remedied immediately by the Contractor with no additional compensation.
   1. All material shall be free from defects impairing strength and durability and be of the best commercial quality for the purpose specified.
   2. Unless indicated otherwise on the drawings, all metal components in the wet well, with the exception of pumps and motors shall be 316 stainless steel as specified herein or on the plans.
   3. The pumps, motors and guide rail system shall be supplied by the pump supplier to ensure unit compatibility.
   4. Station piping shall conform to ECUA Water and Sewer Standards. Specifically, station piping shall be as follows:
      a) Piping within the wet well shall be flanged schedule 10 316 stainless steel, (intermediate joints shall be welded). Fittings within the wet well shall be flanged 316 stainless steel. All nuts, bolts and accessories within the wet well shall be 316 stainless steel.

b) Pipe and fittings outside of the wet well and above ground shall be 316 stainless steel (flanged, schedule 10). All fabricated fittings shall be constructed to ANSI dimensions. If a spool piece is required, the length of the "run" or "through" dimension of a standard tee fitting of equal diameter to facilitate emergency replacement. Any variance shall be pre-approved by ECUA prior to installation. All bolts, washers and nuts shall be 316 stainless steel and shall be coated with "Never Seize" anit-sieze compound.

c) Force main piping below ground, outside of the wet well shall be in accordance with Section 02576 – Sanitary Sewer Force Mains of this standards manual.

d) Minimum wet well size shall be 8 foot diameter. A 12 foot diameter wet well (minimum) shall be utilized in cases where the pump discharge piping (in the wet well) is 10-inch diameter or larger.

3.5 REFERENCE POINTS AND LAYOUT

A. The Contractor shall be responsible for setting all grade stakes, lines and levels. The Contractor or Contractor's Surveyor will provide centerline of construction and will establish a bench mark. Any reference points, points of intersection, property corners, or bench marks, which are disturbed during construction, shall be restored by a Land Surveyor registered to practice in the State of Florida, and all costs thereof shall be borne by the Contractor. The Contractor shall assume all responsibility for the correctness of the grade and alignment stakes.

PART 4 - SUBMERSIBLE PUMPS

4.1 OPERATING CONDITIONS AND UNIT SIZES

A. Operating conditions and unit sizes shall be as shown on the drawings. The pump design operating conditions shall be within 10% +/- of the best efficiency point, unless otherwise approved by ECUA. When possible, the pump selection shall initially operate near and to the right of the best efficiency point (BEP).

4.2 SHOP DRAWINGS AND PUMP TAGS

A. Prior to commencing the pumping station installation and/or the furnishing of replacement pumps, the pump vendor shall submit for approval, detailed and dimensioned shop drawings for pumps including factory curves of identical model pumps provided to ECUA. The pump vendor shall furnish and deliver at the time of acceptance for use of the lift station and/or of the replacement pump(s) by ECUA, 3 compact disks (Adobe Acrobat, Microsoft Word or

Excel) and 6 manuals containing Operation & Maintenance data and motor and pump nameplate data (including serial numbers) for each pump supplied. The pump vendor shall provide a stainless steel or aluminum placard or tag which indicates all operating conditions of the pumps, including name plate data, impeller size and part number, design flow, TDH, and other pump related data. The tag shall be placed (with adhesive) inside the front panel of the pump control panel or as directed by ECUA.

4.3 PUMP EQUIPMENT:

A. Pumping equipment shall be premium quality submersible non-clog pumps for sewage service. Pumps shall be as listed in **Table 1: ECUA Pump Selection Chart** provided at the end of this section. Submersible pumps shall be complete with a submersible electric motor, floor-mounted discharge base and elbow, guide rails, motor electrical cable (minimum 50 feet in length) to connect at the control panel, disconnect, or junction box (no splicing allowed) and all other appurtenances specified or otherwise required for proper operation. Supplied pump cables are not to be trimmed without prior authorization and, if trimming is allowed, must be witnessed by ECUA Lift Station Maintenance Staff.

4.4 GENERAL

A. Equipment furnished and installed shall be fabricated, assembled, erected and placed in proper operating condition in full accordance with approved drawings, specifications, engineering data, instructions and recommendations of the equipment manufacturer, unless exceptions are noted and approved by ECUA. A letter from the pump manufacturer must be included in the submittal stating compliance to project specifications. Maximum motor horsepower shall be non-overloading over the entire length of the pump curve unless otherwise noted and approved.

4.5 SERVICE CONDITIONS:

A. Pump performance shall be stable and free from cavitations and excessive vibration and noise throughout the specified operating head range at minimum suction submergence. Pump shall be designed so that reverse rotation at rated head will not cause damage to any component. Pump manufacturer shall supply a registered engineer to witness the pump tests and sign and seal the Certified Hydraulic Institute test reports.

4.6 MATERIALS

A. Major pump components shall be of gray cast iron unless otherwise noted. The Contractor/Developer shall furnish a spare pump impeller, volute, wear rings, wear plate, seals, and all other necessary maintenance parts for each installed pump specified. The spare pump impeller shall not be trimmed. The spare parts shall be delivered to ECUA in a storage box made with pressure treated wood and marked with the lift station number and applicable pump model on all visible sides. As an alternate, the Contractor/Developer may supply a complete single spare pump in lieu of the various spare parts listed above.

4.7 SOLIDS HANDLING PUMP CONSTRUCTION

A. Impeller: The impeller casing shall have well-rounded water passages and smooth interior surfaces free from cracks, porosity, blowholes, or other irregularities. The impeller shall be a semi-open or enclosed one-piece casting and must pass a minimum 3-inch solid sphere. Vortex impellers may be used with prior authorization from ECUA staff on a case-by-case basis. The interior water passages shall have uniform sections and smooth surfaces and shall be free from cracks and porosity. The impeller shall be dynamically balanced and securely locked to the shaft by means of a key and self-locking bolt or nut. All interior surfaces of the wet end (impeller, volute and back plate) shall be coated with Belzona 1321 Ceramic S-metal or preapproved equal. Hardened metallurgy may be required in sewer collection areas that are known to have a high grit content. Coatings shall be applied in accordance with coating manufacturer's recommendations.

B. Mechanical Seals (Upper and Lower Seals): Pumps shall have mechanical seals, which shall require neither maintenance nor adjustment and shall be readily accessible for inspection and replacement. The seals shall not rely upon the pumped media for lubrication and shall not be damaged if the pump is run un-submerged for extended periods while pumping under load. Mechanical seals shall be solid hard faced, (not laminated type). The bottom and top seals shall be silicon carbide.

C. Mating Surfaces: All mating surfaces (pump assembly), of major components shall be machined and fitted with o-rings where watertight sealing is required.

D. Wear Rings: Impeller and volute must have stainless steel wear ring system (except vortex impellers). Impeller wear ring shall be 300 series Brinnell hardness, minimum, and volute wear ring shall be 400 series Brinnell hardness, minimum. Wear rings may not be required if hardened metallurgy components are utilized.

E. Discharge Base and Elbow: The pump manufacturer shall furnish a discharge base and discharge elbow for the pump supplied. The base shall be sufficiently rigid to firmly support the guide rails, discharge piping and pump under all operating conditions. The base shall be suitable for bolting to the floor, (bolting to the pump mounting bracket, see details on drawings), of the wet well. All bolts shall be supplied with a fender and lock washer. The face of the discharge elbow inlet flange shall make contact with the face of the pump discharge nozzle flange. The pump and motor assembly shall be a "quick disconnect" type connected to and supported by the discharge base and guide rails allowing the pump to be removed from the wet well and replaced without the need for unbolting any flange or requiring personnel to enter the wet well. Pump shall be provided with a sealing flange and guide rail sliding bracket. The bracket shall be designed to obtain a leak proof seal between flange faces as final alignment of the pump occurs in the connected position. The bracket shall maintain proper contact and a suitably sealed connection between flange faces under all operating conditions. Metal to metal mating surfaces are unacceptable.

F. Motors: The pump shall be driven by a totally submersible electric motor rated for service utilizing an adjustable-speed drive (VFD). Pump motor shall be of sufficient horsepower as to be non-overloading over the entire length of the pump curve. The stator housing shall be a watertight casing. Motor insulation shall be moisture resistant, Class H, at a minimum. Motor shall be NEMA Design B for continuous duty at 40 degree C ambient temperature and designed for at least 10 starts per hour. All motors shall be 3 phase unless preapproved by ECUA. Motor bearings shall be anti-friction, permanently lubricated type. Motor shall be oil-cooled and designed to operate in a totally or partially submerged condition without damage to the motor. Pump cable assembly shall bear a permanently embossed code or legend indicating the cable is suitable for submerged and hazardous duty use. Cable sizing shall conform to NEC requirements. The cable shall enter the pump(s) through a heavy-duty stainless steel assembly with grommet. An epoxy seal system shall be provided to this cable entrance assembly to achieve water tightness. The system used shall ensure a watertight submersible seal. Cable shall terminate in a junction chamber. Junction chamber shall be sealed from the motor by a compression seal and epoxy dam system. All motors shall be explosion proof. Provide motors that are FM or UL listed for use in Class I Division 1 Groups C&D hazardous locations as defined by the National Electric Code.

G. Balance: All rotating parts shall be accurately machined and shall be in as nearly perfect rotational balance as possible. Excessive vibration shall be sufficient cause for rejection of the equipment. The pump impellers shall be re-balanced after being trimmed and coated.

4.8 GUIDE RAILS

A. Pump shall be equipped with two guide rails (no cable wire assembly). Guide rails shall be schedule 40 pipe, minimum, a minimum of 2-inches in diameter and sized to fit the discharge base and the sliding bracket and shall extend upwards from the discharge base to the access hatch cover at the top of the wet well. Intermediate rail braces shall be provided and evenly spaced for wet wells greater than 15 feet in depth. Braces secured to the discharge piping shall not be accepted. Guide rails and brackets shall be 316 stainless steel, no exceptions.

B. Pump removal shall be facilitated by a lifting bale only, no chains or cables are allowed unless specifically noted by ECUA. Lifting bales shall be stainless steel and shall be easily "hooked" from the top of the wet well. Lifting bale shall be designed for the full weight of the pump with a safety factor of 1.6.

4.10 INSTALLATION

A. Pump discharge base shall be leveled, plumbed and aligned into position to fit connecting piping. The discharge base shall be solidly secured to the wet well floor using the pump mounting plate and appropriately sized 316 stainless steel anchors. This work shall be inspected by ECUA prior to any liquid being allowed into the wet well. After final alignment and bolting, pump discharge base and all connections shall be inspected. If any movement or opening of any joints is observed, any and all piping, including pump discharge base, shall be corrected.

PART 5 - FRAME AND COVERS

A. Access frame and covers shall be suitable size for pumping units furnished and shall be constructed of skid-proof aluminum with a minimum load rating of 300 lbs. /sq. ft. or H-20 traffic loading when called for on the drawings. Frame and covers shall be furnished complete with stainless steel staple assembly (not recessed) for the locking mechanism, hold-open device, upper guide holder and cable holder. Access covers shall be hinged to open as indicated on the drawings. Hatches shall be sized to provide a 4-inch minimum clearance between hatch and pump volute (measured from all sides and includes the pump and rail system). Hatches shall be gasketed to minimize water intrusion and odors, with drain piping.

B. All hinges, fasteners and miscellaneous hardware shall be 316 stainless steel. For tamper proof and security purposes, the hinges shall be bolted to the door(s) with stainless steel carriage bolts and nuts. The nuts shall be welded to

the bolts on both the door(s) and frame. ECUA will provide pad locks, as required. Locks shall be easily accessed, no slam-lock-type locking mechanisms will be allowed.

PART 6 - VALVES

6.1. GENERAL

A. The contractor shall furnish and install check valves, plug valves, and appurtenances as shown on the drawings and as specified in the ECUA Water and Sewer Standards Manual.

B. The coating system for the valves and appurtenances (as needed) shall be manufactured by Sherman Williams. Surface Preparation shall be based on the guidelines set forth by the Society for Protective Coatings (SSPC) as follows: 1.) ***New Materials*** - SP6, Commercial Blast, or 2.) ***Refurbishing Existing Piping, Valves, and Appurtenances*** - SP6, Commercial Blast or SP10, Near White Metal depending on level of corrosion and paint damage.

Level	**Paint**	**Dry Film Thickness (Microns)**
Primer	Macropoxy 646	6-9
Intermediate	Macropoxy 646	6-9
Top	Acrolon 218	2-4

In addition, the surface preparation requirements shall be field verified by ECUA Maintenance or Engineering Representatives.

C. Unless otherwise noted, painting system shall be applied in accordance with manufacturers recommendations.

Color selection shall be in accordance with ECUA Standards. Any variance from these standards must be approved by ECUA Engineering staff prior to application.

6.2. CHECK VALVES (LEVER & WEIGHT STYLE)

A. Check valves shall conform to the requirements of AWWA C508. Check valves larger than 2-inch nominal size shall be iron body with stainless steel bolts and nuts, flanged ends, 316 stainless steel shaft connected to a steel outside lever and weight, swing-type with straight-away passageway of full pipe area. The valve shall have renewable bronze seat ring and rubber-faced disc. Check valves shall be 150 psi working pressure. All interior and exterior ferrous surfaces shall be coated with fusion bonded epoxy in accordance with AWWA Standard C-550.

6.3 PLUG VALVES (ABOVE GROUND ONLY)

A. Plug valves shall be of the non-lubricated, 100 percent port eccentric type with resilient faced plugs with flanged ends, furnished with all necessary joint materials. Valves are to be rated for 150 psi (non-shock working pressure), cast-iron body, nickel seat, and hard rubber Hycar coated plug with a flushing port. Valves shall be installed with the seat on the downstream side of the flow path, to provide a positive seal when closed. Valve shall include hand-wheels for operation. Valves shall be as manufactured by Dezurik or approved equal. Unless otherwise approved by ECUA, plug valves will not be allowed in direct bury applications. Direct bury valves shall be resilient seated gate valves as specified in Section 02576 – Sanitary Sewer Force Mains of the specifications. All interior and exterior ferrous surfaces shall be coated with fusion bonded epoxy in accordance with AWWA Standard C-550.

PART 7 - TESTING

7.1 PUMP FACTORY TESTS

A. The pump manufacturer shall perform the following tests on each pump prior to shipment. Pump test report must be provided to Engineer prior to pump installation.

1. Megger the pump motor and cable for insulation breaks or moisture intrusion.
2. Prior to submergence, run pump dry "bump" and check for correct rotation.
3. Pump shall be run continuously for 30 minutes in a submerged condition, with a minimum submergence of 10 feet.
4. Vibration shall not exceed 10 mm/s (RMS) when measured at the main bearing nearest to the impeller.
5. Pump shall be removed from test tank, meggered immediately for moisture and all seals checked for water intrusion.
6. Pumps shall be operated at a minimum of 6 points to establish the hydraulic curve. Variable speed pumps shall be reduced in speed in increments of 200 rpm down to the minimum speed and operated at a minimum of 6 points to establish the hydraulic curves for each of the speeds. KW input shall be monitored and recorded. One test point shall be performed with discharge valve closed. Pumps shall develop appropriate capacity and head within Hydraulic Institute Standards without excessive noise or cavitations.

7. For pumps less than 100 HP, the pump supplier shall submit copies of certified Hydraulic Institute test reports including factory pump curves for each pump (s) provided to ECUA.
8. For pumps 100 HP and greater, the above certified pump performance test (at a minimum) must be completed on each actual pump supplied. An ECUA representative(s) may be required to witness the certified test (ECUA's travel expenses by ECUA).

7.2. FIELD ACCEPTANCE TESTING

A. Pre-Final Inspection: Prior to final inspection, the Contractor shall conduct a pre-final site inspection (including energizing each pump), in the presence of an ECUA representative. Any deficiencies noted at this time shall be corrected prior to scheduling of the final inspection.

B. Final Inspection:

1. The Contractor shall be responsible for conducting the following field acceptance tests and start-up procedures in the presence of a ECUA representative. The Contractor shall notify ECUA, the Engineer and the pump manufacturer's representative 48 hours prior to the proposed start-up. The time and date of this final inspection shall be scheduled by ECUA. The Contractor shall furnish all labor, piping, equipment, water and materials required to perform the acceptance testing. The Contractor shall ensure the force main is full of water prior to the pump test. The pumps shall not be field tested by recirculating water through the wet well.

2. The Contractor shall demonstrate that the pump mounting and guide rail systems are fully operational. The Contractor shall remove and reinstall the pumps in the presence of the ECUA representative, prior to conducting the performance test.

   a. Prior to acceptance, as part of the final inspection, and prior to placing the station in operation, the Contractor shall conduct a pump performance test. Pumps shall operate according to the operating conditions indicated on the drawings without excessive vibration or overheating. Testing shall be performed using clean water. The Contractor shall supply water at its own expense to perform the required testing. Pumping rates shall be determined by pumping a calculated volume of water in a specified time interval. Head and flow conditions shall be measured and recorded. Water levels during testing shall fall within the pump control levels shown on the drawings. Amperage draws shall be

monitored to determine effectiveness and efficiency of equipment. The test shall be repeated until satisfactory results are obtained. The test results shall be recorded on the Pump Test Report sheet included in the appendix section herein. Test reports shall include a minimum of three (3) points on the factory curve provided in the field at start-up. Pump test data will include the factory curve and the start-up curve. If the Contractor is unable to demonstrate to ECUA that the pumping unit performs satisfactorily, the unit shall be rejected. The Contractor shall then remove and replace the defective unit at its own expense. Satisfactory performance includes, but is not limited to, the following:

b. Pumps shall deliver rated GPM at rated TDH.
c. Running amperage shall be noted and recorded on each leg of power cord while pump is operating under full load.
d. All self test trip relays shall demonstrate ability to simulate a fault condition. All test results shall be recorded on the pump test report and be submitted to the Engineer.
e. Unless otherwise allowed by ECUA, pumps shall operate within 5 % of the approved, certified, head-capacity curve.
f. Following performance testing, pumps shall be meggered for pump-moisture intrusion.

PART 8 - WASHDOWN STATION

8.1. WATER SERVICE PIPING

A. Water service piping shall be 2-inch diameter (minimum). Water meter, shall be 1 1/2-inch diameter (minimum) and will be supplied and set by ECUA unless otherwise noted. Materials and installation shall meet ECUA's standards for typical water service construction unless otherwise noted or water service provided by a utility other than ECUA.

8.2. BACKFLOW PREVENTOR

A. The Contractor shall furnish and install a 2-inch diameter (minimum) reduced pressure backflow preventer which meets the requirements of ECUA's Cross Connection Control Policy (see details on drawings).

8.3. WATER SERVICE & METER

A. The Contractor shall secure the water meter by filling out an ECUA water meter application. There is no fee for a water service for an ECUA Standard Lift station. The Contractor shall install the meter box and service in accordance with all applicable ECUA Standard Details and Specifications and

ECUA will install the meter. If ECUA is not the provider of water service, the Contractor/Developer shall be responsible for all installation fees, including but not limited to permitting and tap fees. The Contractor shall be responsible for the cost of all water used during construction and testing. The water service will then be transferred to ECUA upon final acceptance of the pump station.

PART 9 - PERMITS

A. The Contractor shall secure and pay for all plumbing, electrical, right-of-way and other required permits and make application for electric and water meter. The Contractor shall be responsible for all costs associated with utilities used during construction and testing of the lift station.

PART 10 - OPERATION AND MAINTENANCE MANUALS

10.1 GENERAL

A. Related Documents: Drawings and general provisions of the Contract, including General and Supplementary Conditions apply to this Section.

B. Summary: This Section includes administrative and procedural requirements for preparing operation and maintenance manuals, including the following:

1. Operation and maintenance documentation directory.
2. Operation manuals for systems, subsystems, and equipment.
3. Maintenance manuals for the care and maintenance of products, materials, finishes and systems and equipment.

C. Submittals:

1. Initial Submittal: Submit 1 draft copies of each manual at least 15 days before requesting inspection for Substantial Completion. Include a complete operation and maintenance directory. Engineer will return one copy of draft and mark whether general scope and content of manual are acceptable.
2. Final Submittal: Submit three copies of each manual in final form at least 15 days before final inspection. Engineer will return copy with comments within 15 days after final inspection.
   a. Correct or modify each manual to comply with Engineer's comments. Submit six (6) copies of each

corrected manual within 15 days of receipt of Engineer's comments.

D. Coordination: Where operation and maintenance documentation includes information on installations by more than one factory-authorized service representative, assemble and coordinate information furnished by representatives and prepare manuals.

10.2 PRODUCTS

A. Operation and Maintenance Documentation Directory

1. Organization: Include a section in the directory for each of the following:
   a) List of documents.
   b) List of systems.
   c) List of equipment.
   d) Table of contents.

2. List of Systems and Subsystems: List systems alphabetically. Include references to operation and maintenance manuals that contain information about each system.
3. List of Equipment: List equipment for each system, organized alphabetically by system. For pieces of equipment not part of system, list alphabetically in separate list.
4. Tables of Contents: Include a table of contents for each emergency, operation, and maintenance manual.
5. Identification: In the documentation directory and in each operation and maintenance manual, identify each system, subsystem, and piece of equipment with same designation used in the Contract Documents. If no designation exists, assign a designation according to ASHRAE Guideline 4, "Preparation of Operating and Maintenance Documentation for Building Systems."

B. MANUALS, GENERAL

1. Organization: Unless otherwise indicated, organize each manual into a separate section for each system and subsystem, and a separate section for each piece of equipment not part of a system. Each manual shall contain the following materials, in the order listed:
   a) Title page.
   b) Table of contents.
   c) Manual contents.

2. Title Page: Enclose title page in transparent plastic sleeve. Include the following information:
   a) Subject matter included in manual.
   b) Name and address of Project.
   c) Name and address of Owner.
   d) Date of submittal.
   e) Name, address, and telephone number of Contractor.
   f) Name and address of Engineer.
   g) Cross-reference to related systems in other operation and maintenance manuals.

3. Table of Contents: List each product included in manual, identified by product name, indexed to the content of the volume, and cross-referenced to Specification Section number in Project Manual.
   a) If operation or maintenance documentation requires more than one volume to accommodate data, include comprehensive table of contents for all volumes in each volume of the set.

4. Manual Contents: Organize into sets of manageable size. Arrange contents alphabetically by system, subsystem, and equipment. If possible, assemble instructions for subsystems, equipment, and components of one system into a single binder.

   a) Binders: Heavy-duty, 3-ring, vinyl-covered, loose-leaf binders, in thickness necessary to accommodate contents, sized to hold 8-1/2-by-11-inch(215-by-280-mm) paper; with clear plastic sleeve on spine to hold label describing contents and with pockets inside covers to hold folded oversize sheets. Maximum binder size shall be 3-inches in thickness.
   b) Protective Plastic Sleeves: Transparent plastic sleeves designed to enclose diagnostic software diskettes for computerized electronic equipment.
   c) Supplementary Text: Prepared on 8-1/2-by-11-inch white bond paper.
   d) Drawings: Attach reinforced, punched binder tabs on drawings and bind with text.
   e) If oversize drawings are necessary, fold drawings to same size as text pages and use as foldouts.
   f) If drawings are too large to be used as foldouts, fold and place drawings in labeled envelopes and bind envelopes in rear of manual.

g) At appropriate locations in manual, insert typewritten pages indicating drawing titles, descriptions of contents, and drawing locations.

5. Descriptions: Include the following:
   a) Product name and model number.
   b) Manufacturer's name.
   c) Equipment identification with serial number of each component.
   d) Equipment function.
   e) Operating characteristics.
   f) Limiting conditions.
   g) Performance curves.
   h) Engineering data and tests.
   i) Complete nomenclature and number of replacement parts.
   j) Copy of pump data plate.

6. Spare Parts List and Source Information: Include lists of replacement and repair parts, with parts identified and cross-referenced to manufacturers' maintenance documentation and local sources of maintenance materials and related services.
7. Warranties and Bonds: Include copies of warranties and bonds and lists of circumstances and conditions that would affect validity of warranties or bonds.
   a) Include procedures to follow and required notifications for warranty claims.

10.3 EXECUTION

A. Manual Preparation: Operation and Maintenance Documentation Directory: Prepare a separate manual that provides an organized reference to emergency, operation, and maintenance manuals.

B. Product Maintenance Manual: Assemble a complete set of maintenance data indicating care and maintenance of each product, material, and finish incorporated into the Work.

C. Operation and Maintenance Manuals: Assemble a complete set of operation and maintenance data indicating operation and maintenance of each system, subsystem, and piece of equipment not part of a system.
   1. Engage a factory-authorized service representative to assemble and prepare information for each system, subsystem, and piece of equipment not part of a system.

2. Prepare a separate manual for each system and subsystem, in the form of an instructional manual for use by Owner's operating personnel.

D. Manufacturers' Data: Where manuals contain manufacturers' standard printed data, include only sheets pertinent to product or component installed. Mark each sheet to identify each product or component incorporated into the Work. If data include more than one item in a tabular format, identify each item using appropriate references from the Contract Documents. Identify data applicable to the Work and delete references to information not applicable.

1. Prepare supplementary text if manufacturers' standard printed data are not available and where the information is necessary for proper operation and maintenance of equipment or systems.

E. Drawings: Prepare drawings supplementing manufacturers' printed data to illustrate the relationship of component parts of equipment and systems and to illustrate control sequence and flow diagrams. Coordinate these drawings with information contained in Record Drawings to ensure correct illustration of completed installation.

EMERALD COAST UTILITIES AUTHORITY
SUBMERSIBLE SEWAGE PUMP SELECTION CHART

Horsepower	**15 HP and Below**	**16-40 HP**	**41 HP and Above**
RPM	1200 or 1800	1200 or 1800	900, 1200, or 1800[4]
Pump Type	Submersible Centrifugal Non-clog or Vortex[1]	Submersible Centrifugal Non-clog or Vortex[1]	Submersible Centrifugal Non-clog or Vortex[1]
Power Control	FVNR Starters	FVNR Starters (<20HP) VFD/Soft Start (≥ 20HP)	VFD
Pump Manufacturer Warranty (100%)	5 year, See Spec.	5 year, See Spec.	5 year, See Spec.
Minimum Pump Efficiency	60%[2]	60%[2]	60%[2]
Motor Insulation Class	Class H	Class H	Class H
Mechanical Seal Type - Pump Side	Silicon Carbide/Silicon Carbide	Silicon Carbide/Silicon Carbide	Silicon Carbide/Silicon Carbide
Mechanical Seal Type - Bearing Side	Carbon/Silicon Carbide	Carbon/Silicon Carbide	Carbon/Silicon Carbide
Bearings	40,000 hours min.	40,000 hours min.	40,000 hours min.
Impeller Wear Ring[3]	Stainless Steel/ 300 Series Brinnell Hardness	Stainless Steel/ 300 Series Brinnell Hardness	Stainless Steel/ 300 Series Brinnell Hardness
Volute Wear Ring[3]	Stainless Steel/ 400 Series Brinnell Hardness	Stainless Steel/ 400 Series Brinnell Hardness	Stainless Steel/ 400 Series Brinnell Hardness
Removal Method/ Material	2-inch Guide Rails Sch. 40, 316 S.S.	2-inch Guide Rails Sch. 40, 316 S.S.	Based on Pump Size 2-inch, Sch. 40 min., 316 S.S.
Seal Availability	2 Business Days	5 Business Days	TBD Based on Size of Pump
Impeller Availability	2 Business Days	5 Business Days	TBD Based on Size of Pump
Shaft	440 Stainless Steel	440 Stainless Steel	440 Stainless Steel
Approved Manufacturer[5]	**EMU**	**EMU**	**EMU**
	Fairbanks Morse	**Fairbanks Morse**	**Fairbanks Morse**
	Hydromatic	**Hydromatic**	**KSB**
	KSB	**KSB**	

1 - Pump selection shall be determined at ECUA's discretion depending on application.

2 - Minimum pump efficiency requirement is for non-clog pumps and may be waived by ECUA on a case by case basis. ECUA project specific requirements shall be shown on Contract Drawings or in Section 02575 of the Contract Specifications

3 - Hardened metalurgy may be required in some locations, primarily where high grit is anticipated (i.e. Pensacola Beach and Perdido Key)

4 - 1800 rpm allowed on pump motors less than 61 horsepower only.

5 - Engineer shall evaluate each approved pump manufacturer and provide ECUA with his/her selection for each. If a pump selection is not available for a manufacturer, Engineer shall provide documentation from pump vendor. Engineer shall obtain ECUA's concurrence prior to final pump selection and power control options during review of permit application or review of construction drawings. A pre-submittal meeting with ECUA is mandatory.

SECTION 2576

SANITARY SEWER FORCE MAINS (INTERIM)

PART 1: GENERAL

1.1 GENERAL DESCRIPTION OF WORK COVERED

Furnish and install all pipe, fittings, structures and accessories required for sanitary sewer force mains.

1.2 QUALITY ASSURANCE

1.2.1 AWWA Standards

Construction materials and methods shall comply with the requirements of the latest published edition of American Water Works Association (AWWA) Standards. Applicable standards include, but may not be limited to, the following:

1	AWWA C110, C110a	Gray Iron and Ductile Iron Fittings, 2-inch through 48-inch for Water and Other Liquids
2	AWWA C111	Rubber Gasket Joints for Cast Iron Pressure Pipe and Fittings
3	AWWA C151	Ductile Iron Pipe, Centrifugally Cast in Metal Mold or Sand Lined Molds, for Water or Other Liquids
4	AWWA C153	Ductile Iron Compact Fittings, 3-inch through 12-inch for Water and Other Liquids
5	AWWA C213	Fusion-Bonded Epoxy Coating for the Interior and Exterior of Steel Water Pipelines
6	AWWA C301	Prestressed Concrete Cylinder Pipe (PCCP), 16-inch and Larger
7	AWWA C509	Gate Valves
8	AWWA C550	Protective Epoxy Interior Coatings for Valves and Hydrants
9	AWWA C900	Polyvinyl Chloride (PVC) Pressure Pipe 4-inch through 12-inch for Water
10	AWWA C950	Glass Fiber Reinforced Thermosetting Resin Pressure Pipe

1.2.2 ASTM Standards

In addition, construction materials and methods shall also comply with the requirements of the latest published editions of the American Society for Testing and Materials (ASTM) Standards.

PART 2: MATERIALS AND EQUIPMENT

2.1 GENERAL

All items furnished shall be new and unused. Pipe to be furnished will be PVC Pressure Rating 160 SDR26 per ASTM D2241 with epoxy lined Ductile Iron fittings unless shown otherwise on the plans and bid documents. All pipe, fittings and accessories shall be suitable and rated for appropriate pressure use. SDR32-5 pipe may be approved for low pressure force mains.

2.2 DELIVERY, STORAGE AND HANDLING

Certificates of compliance with specifications shall be required for all materials used on the project. All materials shall be protected during transportation, storage, handling and

installation to avoid physical damage. All materials shall be stored to prevent physical deterioration due to sun and weather. The ECUA reserves the right to reject material which in any way does not meet the requirements of these Specifications.

2.3 FORCE MAINS

2.3.1 Polyvinyl Chloride Pipe (PVC)

PVC pipe shall meet ASTM D2241, AWWA C900 or C905 Standards, with minimum designations per table below. PVC pipe shall be provided with push-on joints with bell integrally cast into pipe, and shall be installed with elastomeric gaskets, as provided in ASTM F477.

TABLE 2.3 - PVC PIPE STANDARDS

Standard	Nominal Size	Dimension Ratio	OD	Pressure Class (psi)	Pressure Rating (psi)
ASTM D2241	2"-18"	SDR26	IP	(128)	160
ASTM D2241	3"-18"	SDR32.5	IP	(100)	125
AWWA C900	4"-12"	DR25	CI	100	(165)
AWWA C905	14"-36"	DR25	CI	(100)	165

A. Markings

PVC pipe shall be marked to indicate the following:

1. Nominal Pipe Size and OD Base
2. Material Code Designation
3. Dimension Ratio
4. Pressure Class or Pressure Rating
5. Manufacturer's Name or Trademark
6. Appropriate AWWA or ASTM Designation Number

B. Color-Coding

One of the following methods of color-coding the pipe shall be used:

1. 3 brown stripes (1/2 inch high) with permanent ink along the entire length of white pipe with the word "FORCE MAIN" in 3/4 inch letters every 21 inches along each stripe.

2. Brown pigment to color entire pipe.

2.3.2 Ductile Iron Pipe (DIP)

Ductile iron pipe shall meet AWWA Standard C151 and pressure class based on Table 2.3.2 below for design operating pressures of up to 150 psig, installed in Class 2 Trenching conditions. Increase pressure class or bedding class as required by AWWA C151 for surface loads greater than indicated above or operating pressures greater than 150 psi. DIP shall be constructed with push-on joints using rubber gaskets in accordance with AWWA Standard C111. Other methods of joint construction, such as mechanical, flanged, or ball-and-socket, may be required in special applications as appropriate. DIP shall be epoxy lined to not less than 20 mil. and exterior coated with manufacturer's standard bituminous coating unless otherwise specified.

TABLE 2.3.2 - DI PRESSURE CLASSES		
Diameter	Class	Max. Depth of Bury
3-inch & 4-inch	350	32 feet
6-inch & 8-inch	350	28 feet
10-inch & 12-inch	350	14 feet
14-inch thru 20-inch	250	10 feet
24-inch thru 64-inch	200	8 feet

A. Markings

Each ductile iron pipe section shall be marked to indicate the weight class or nominal thickness, and casting period. The manufacturer's mark, country where cast, year in which the pipe was produced, and the letters DI or DUCTILE shall be cast or stamped on the pipe. All required markings shall be clear and legible, and all cast marks shall be on or near the bell. All letters and numerals on pipe sizes 14-inch and larger shall be not less than 0.5-inch in height.

B. Encasement

When required, DIP shall be encased in polyethylene material in accordance with AWWA Standard C105.

2.3.3 Glass Fiber Reinforced Thermosetting Resin Pipe (18-Inch And Larger)

Pipe manufactured by Price Brothers as HOBAS Pipe and complying with AWWA C950 may be used. Detail specifications will be developed for pipe and fittings when required or allowed as an alternate.

2.3.4 Prestressed Concrete Cylinder Pipe (Pccp) (16" And Larger)

This pipe shall comply with AWWA C301. When required, detail specifications will be developed for pipe and fittings.

2.4 FORCE MAIN APPURTENANCES

2.4.1 Force Main Fittings

Force main fittings shall include tees, wyes, bends, reducers, and other appurtenances commonly used in pipe construction. Fittings shall meet AWWA Standard C110 or C153 with pressure ratings of not less than that specified for adjacent pipe. Fittings shall be constructed with mechanical joints, unless otherwise specified, and shall be supplied complete with low alloy steel bolts and nuts, EPR gaskets and other necessary parts required for field assembly. Fittings shall be epoxy lined as specified for adjacent pipe.

A. Pipe Couplings

Pipe couplings shall be solid sleeve type with mechanical joints at each end containing and compressing a gasket. Couplings shall be ductile iron, 12 inches minimum in length, with low alloy steel bolts and nuts, and EPR gaskets. Rings and gaskets shall be sized to conform exactly to the requirements of the pipe manufacturer.

B. Pipe Cut-in Sleeves

Cut-in sleeves shall be solid ductile iron, one end plain for insertion to female fitting, the other end flanged mechanical joint, furnished with loose attaching flange and fastener, nominal length of 20-21 inches. Rings and gaskets shall be sized to conform with the requirements of the pipe manufacturer.

Approved Manufacturers

Manufacturer	Model	Application
Clow	F-1220	for centrifugally cast or sand cast pipe (special)
Clow	F-3459	for all classes of centrifugally cast pipe
Union Foundry	21-4520 21-4610 24-4800	MJ X PE FLG X PE MJ X FLG
Clow	F-3459	for all classes of centrifugally cast pipe
Others as approved by ECUA in writing.		

C. Repair Clamps

Repair clamps shall not be used in the installation of new pipe except with the written permission of the Engineer. Repair clamps shall be full circle and selected based on Table 2.4.1.3 below.

TABLE 2.4.1.3 - REPAIR CLAMP SIZES	
Pipe Diameter	Maximum Sections
Up to 12-inch	Single Section
14-inch to 24-inch	Double Section
26-inch and above	Triple Section

Repair clamps shall be composed of stainless steel bands and bolts, DI lugs and full gridded virgin EPR compounded gasket.

Repair clamps shall be sized so that the OD of the existing pipe being repaired falls within the designated range for the clamp size. Repair clamps shall have ample length to give full gasketing at both ends.

Approved Manufacturers

Manufacturer	Model
Ford	FS1 (all SS), Fordflex (SS-DI Lugs)
Rockwell	2XX*
JCM	101,102,103,104,131,132,133,134
Mueller	520, 530
Others as approved by ECUA in writing.	

*XX: See Mfr.'s catalog to complete model numbers by size.

D. Pipe Restraints

Retainer glands shall be used on all force main fittings and appurtenances, unless otherwise approved. Stainless steel all-thread tie rods may otherwise be used, with the written permission of the Engineer. In cases of tees, tapping sleeves, and flushing hydrants, the fitting shall be restrained with retainer glands and thrust blocks. See ECUA Standard Details D-43 and D-44.

Approved Manufacturers

Manufacturer	Model
EBAA Iron Works	MegaLug
Others as approved by ECUA in writing.	

E. Expansion Joints

Expansion joint fittings shall be used where specified on the Construction Plans. They shall be of the rigid or flexible type as specified, and manufactured of ductile iron in accordance with 2.4.1 above. They shall be capable of expanding or contracting to the extent shown on the plans, but in no case less than 4-inch axially, and designed to prevent separation beyond the maximum extension without the use of external tie rods.

Fittings shall be provided with restrained mechanical joints, individually pressure tested to a minimum of 350 psi against their own restraints, and internally coated on all exposed surfaces with a minimum of 15 mils. of fusion bonded epoxy conforming to AWWA C213. They shall be capable of deflecting not less than 15° by means of an integral ball at each joint in the case of flexible types.

Approved Manufacturers

Type	Manufacturer	Model
Rigid	EBAA Iron, Inc.	EX-TEND 200
Flexible	EBAA Iron, Inc.	Flex-Tend
Others as approved by ECUA in writing.		

F. Tapping Sleeves

Tapping sleeves shall be mechanical joint or fabricated-type designed for a working pressure of 200 psig without leakage. The outlet branch connection shall have a recessed flanged face for connection of tapping valve with standard dimensions in accordance with MSS SP-60. A complete set of neoprene or other elastomer gaskets shall be furnished. Sleeves shall be furnished to fit cast iron, cement-asbestos, Class 160 or C900/905 PVC pipe with side connection as shown on plans or specifications in standard pipe sizes of 4-inch X 4-inch through 16-inch X 12-inch. Sleeves shall be furnished with all necessary installation parts such as mechanical joint loose flange ends, bolts, fasteners, seals and gaskets.

Approved Manufacturers

Manufacturer	Main Material	Model
Clow	CI & C900 PVC Class 50, 100, 150, 200 10-inch & 12-inch Class 50, 100	F-5205 F-5207 4 F-5205
American Darling	CI & C900 PVC CI & CA	2800C 2800A
Mueller	CI, DI - 4-inch - 12-inch CA - 4-inch - 8-inch CI Class C & D - 10-inch - 14-inch CA - 4-inch-12-inch	H615 H615 H616 H619
M & H	MJ Class A-B Pipe MJ Class C-D Pipe	1174 1274
Others as approved by ECUA in writing		

Note: To specify exact fitting when ordering, state line diameter and line material.

1. Mechanical Joint Tapping Sleeves

Mechanical joint tapping sleeves shall be cast iron with mechanical joint main ends and a standard special dimension tapping machine attaching flange on the branch connection. The sleeve shall be of split configuration and fabricated in accordance with AWWA Specification C-110 with joints to AWWA Specification C-111.

2. Fabricated Tapping Sleeves

Fabricated tapping sleeves shall be the high-strength type having a wide body, made of 285 Grade C steel, which conforms to and reinforces the pipe to be tapped. Body length must be at least twice that of the tap size. The sleeve shall have, as a minimum, a 7/8-inch wide recessed Buna-N gasket around the outlet, and 3/4-inch high-strength corrosion resistant alloy bolts. Sleeve to be furnished with manufacturer's standard corrosion resistant coating.

Approved Manufacturers

Manufacturer	Model
JCM Industries	Model 412
Smith & Blair	622
Ford	FTS
Others as approved by ECUA in writing.	

G. Pipe Hangers and Supports

Hangers and supports shall be in compliance with Federal Specification WW-H-171E, or Manufacturer's Standardization Society SP-69, or UL listed. Materials of construction shall be in accordance with the requirements outlined in Table 2.4.1.7 below.

TABLE 2.4.1.7 - PIPE HANGERS AND SUPPORTS
MATERIALS OF CONSTRUCTION

Part I.D.	Material
Clamps	Steel - Epoxy Coated or Galvanized Cast Iron - Galvanized Malleable Iron
Hanger Rods	Steel - Electro Galvanized Steel - Stainless 304
Rollers/Bases/Roller Stands	Cast Iron
Fasteners/Fittings	Galvanized Steel Stainless
Hanger Rod Inserts	Steel: Cadmium Plated Steel: Galvanized Universal Concrete Insert - Cast Iron - Galvanized
Rod Attachments	Clevis - Forged Steel Turnbuckle: 1) Forged Steel, 2) Malleable Iron Sockets, Eye Nuts, Extension - Malleable Iron
Rollers	Steel or Iron Core, Insulated from Structure

Approved Manufacturers

Manufacturer	Part I.D.	Model No.
ITT Grinnell	Clevis Hanger	590
	Socket Clamp	224 246

	Concrete Inserts:	
	CB-Universal	282
	Screen Insert	152
	Rod Attachments:	
	Eye Nut	290
	Forged Clevis	299
	Forged Turnbuckle	230
	Carbon Steel	233
	Couplings	136
	Socket Eye	110R
	Extension	157
	Pipe Rolls:	
	Adjustable Swivel	174
	Adjustable Steel Yoke	181
	Pipe Roll with Base	274
	Pipe Roll and Plate	277
Others as approved by ECUA in writing.		

2.4.2 Valves

All valves shall be manufactured in accordance with the current appropriate AWWA Standard.

A. Resilient Seated Gate Valves

Resilient seated gate valves shall be designed and fabricated in accordance with the current AWWA Standard C-509. The basic design of the gate valves shall have a cast iron body, elastomer encapsulated cast iron disc, bronze stem and operating nuts with non-rising stem design. The valve working pressure shall be 200 psig with a test pressure of 400 psig.

1. Materials and Construction

Valves shall open counterclockwise with a 2-inch square cast iron operating nut secured to the valve stem by a corrosion resistant nut to threads on the valve stem. The valve stem shall be made of high tensile strength bronze and shall be of one piece construction sealed by O-Rings. The thrust collar shall be secured in place by a stuffing box or bonnet cover with a thrust washer located above the thrust collar. Valve construction shall be so that upper O-Rings can be replaced with the valve in service. The disc shall be cast iron encapsulated with an elastomer material bonded in accordance with ASTM D429 and shall be secured to the threaded stem by a bronze nut. The disc shall effect a seal that is bubble-tight at 200 psig.

2. Corrosion Resistant Coatings

All interior and exterior cast iron surfaces shall be coated with fusion bonded epoxy in accordance with AWWA Standard C-550.

3. Body Sizing

Valve body length shall be per ANSI Standard B16.2 for the type of end connections specified. In the full open position, the valve internal bore shall be smooth and obstruction-free without cavities or projections that could accumulate solids. The internal cross-sectional area of the valve shall be approximately equal to the nominal cross-sectional area for Schedule 40 PVC pipe of the same nominal internal diameter.

4. End Connections

Valves shall be furnished with mechanical joint end connections, complete with flange kits, unless otherwise specified on the plans or purchase order.

When flanged ends are specified they shall be flat face nominal 125# ANSI B16.1 Standard with bolt holes straddling the vertical center line.

Approved Manufacturers

	VALVE BODY CONNECTIONS			TAPPING VALVES
Manufacturer	MJ x MJ	MJ x FLG	FLG x FLG	MJ x SF
American Darling	4-inch - 12-inch CSR-80X	4-inch - 12-inch CSR-80X	CSR-80X Specify Ends	4-inch - 12-inch No. 862 16-inch - 24-inch*
Clow	2-inch - 12-inch F6100	4-inch - 12-inch F-6106	4-inch - 12-inch F-6102	4-inch - 12-inch F-6114 14-inch - 24-inch F-5093*
Kennedy	3-inch - 12-inch F-1571-XNRS	3-inch - 12-inch F-1572-XNRS	3-inch - 12-inch F-1561-XNRS	3-inch - 12-inch F-950X
M & H	4-inch - 12-inch S-4067-01		4-inch - 12-inch S-4067	2-inch - 12-inch H-667 200 PSI 14-inch - 24-inch H-667 150 PSI
Others as approved by ECUA in writing.				

*Metal seated only, specify bypass if required
14-inch and larger valves specify special appurtenances.

B. Resilient Seated Tapping Valves

These resilient seated gate valves shall be designed and fabricated in accordance with the current AWWA Standard C-509. The basic design of the gate valves shall have a cast iron body, elastomer encapsulated cast iron disc, bronze stem and operating nuts with non-rising stem design. The valve working pressure shall be 200 psig with a test pressure of 400 psig.

1. Materials and Construction

Valves shall open counterclockwise with a 2-inch square cast iron operating nut secured to the valve stem by a corrosion resistant nut to threads on the valve stem. The valve stem shall be made of high tensile strength bronze and shall be of one piece construction sealed by O-Rings. The thrust collar shall be secured in place by a stuffing box or bonnet cover with a thrust washer located above the thrust collar. Valve construction shall be so that upper O-Rings can be replaced with the valve in service. The disc shall be cast iron encapsulated with an elastomer material bonded in accordance with ASTM D429 and shall be secured to the threaded stem by a bronze nut. The disk shall effect a seal that is bubble-tight at 200 psig.

2. Corrosion Resistant Coatings

All interior and exterior cast iron surfaces shall be coated with fusion bonded epoxy in accordance with AWWA Standard C-550

3. Body Sizing

Valve body length shall be per ANSI Standard B16.1 for tapping valves. Tapping valves shall conform to Specification AWWA C509, latest revision, covering gate valves except as modified for passage and clearance of tapping machine cutters. The opening through the valve shall be at least 1/4-inch larger than nominal valve diameter. Tapping valves shall allow full size shell cutters to be used.

4. End Connections

Valves shall be furnished at one end of the body with projecting face flange in accordance with specification MSS SP-60 for tapping valve/saddle connections to bolt to a standard tapping sleeve and the other end for mechanical joint.
Approved Manufacturers

See Section 2.4.2.1 above.

C. Air Release Valves

Force mains shall be laid so as to minimize the number of high points. Air release valves shall be installed at all high points in force mains wherever the high point is more than one pipe diameter above the adjacent low points. Exact locations of air release valves shall be field determined. In all case, installation should be in the furthest downstream portion of each high point.

1. Manual Air Release Valves

Manual air release valves shall comprise a 2-inch diameter saddle and corporation stop, extended to grade, and terminated with a lockable curb stop housed in a meter box. These components are specified in Section 2556.2.7. See Standard Detail D-60.

2. Automatic Air Release Valves

Automatic air release valves shall be float operated to release accumulated air whenever the system is pressurized. The body and end covers shall be of cast iron conforming to ASTM A48, Class 35. All internal metal parts, including the float, shall be stainless steel. The air vent valve shall close drip tight, be rated for 200 psi operating pressure and 300 psi test pressure, and shall incorporate a renewable Viton seat. See Standard Detail D-61.

Approved Manufacturers

Manufacturer	Model
Empire Specialty Co., Inc., Mars, PA	Figure 905
Others as approved by ECUA in writing.	

D. Check Valves

Check valves are required on all force mains which manifold into an equal or larger sized force main. The check valve is to be installed in a vault adjacent to the gate valve at the point of connection into the larger line in order to prevent backflow from the larger line into the smaller line. Details shall be as shown in Section 2575.2.06.D.2 on page 2575.7, except that mechanical joint ends may be used.

E. Valve Vaults or Chambers

All valves which are not designed for direct burial shall be installed in vaults, which shall be constructed from standard precast concrete manhole sections. They shall be sized to allow sufficient room for maintenance and repair in situ. For shallow installations, flat tops should be used as shown in the ECUA Standard Shallow Manhole Detail D-2. Gravel bottoms shall be installed in areas where the water table is below the bottom. Where it is higher, a minimum 4-inch concrete bottom shall be provided with a 12-inch x 12-inch sump.

F. Valve Boxes

Valve boxes shall be provided for all direct buried valves. Nominal 6-inch cast-iron sliding-type pipe shaft with cover and base casting shall be used. The box top shall be set at finished grade and encased with a concrete ring in unpaved areas. Each valve box shall be furnished with a drop-in cover marked "SEWER". See ECUA Standard Detail D-34.

2.4.3 Location Aids

All new force main and service line installations shall include an approved method for locating lines from the ground surface after completion.

2.4.4. Tracer Wire

Tracer wire for force mains shall be minimum 12 gauge copper with brown PVC insulation. Tracer wire systems shall be electrically continuous covering all mains within the project. Wire-to-wire connectors shall be made with silicone-filled wire nuts. Wire-to-appurtenance attachments shall be made with lug-type terminals.

Approved Manufacturers (Tracer Wire Silicone-filled Wire Nut Connectors)

Manufacturer	Model
Ideal Industries	Twister® DB Plus
King Technology, Inc.	Failsafe™
Others as approved by ECUA in writing.	

2.4.5 Pipeline Markers

Markers shall be of a passive electronic type that reflects a signal back to an electronic hand-held transmitter/detector. Electronic components shall be enclosed in a waterproof polyethylene housing. Markers shall have a different response frequency for each service line type.

Markers shall be ScotchMark® products manufactured by 3M Telecom Systems Group, Austin, Texas. Alternate manufacturers are not acceptable.

Application	Usable Depth	Dimension/ Configuration	Service	Color Code	Model
Near Surface	2 feet	3½"L X 5/8" ∅ Cylinder	Water Wastewater	Blue Green	1434 1435
Medium Depth	4 feet	4" ∅ Ball	Water Wastewater	Blue Green	1403 1435
Deep	6 feet	8" ∅ X 1" Thick Disc	Water Wastewater	Blue Green	1257 1258

PART 3: EXECUTION

3.1 GENERAL

The contractor shall provide all labor, equipment and materials as required to install all pipes, valves, fittings, and other appurtenances as indicated on the construction plans or as specified in the contract documents.

3.2 POTABLE WATER LINE SEPARATION FROM SANITARY SEWER LINES

A. When a gravity sewer line must cross under a water line with less than 18-inch vertical clearance, one of the following methods may be used.

1. Fully encase sewer line with a minimum of 4 inches of concrete (2500 psi) for a minimum distance of 10 feet either side of the point of crossing, which must be at least 5 feet from a water line joint. If the crossing is other than at right angles, increase the length of encasement so that the end of the encasement will be at least 12 feet from a water line joint.

2. Use equally rated pressure pipe for the sewer lines with no joints closer than 12 feet apart and at least 6-inch vertical clearance.

3. Install sewer pipe into at least a 20-foot section of steel casing (casing I.D. slightly larger than sewer pipe bell O.D.) and center over crossing so that end of casing will be at least 12 feet from water line joint. Seal the ends of the casing with non-shrink grout.

B. When a gravity sewer line must cross over a potable water line, regardless of clearance, because the water line cannot be relayed above sewer, use method 2 or 3 in subsection A. Concrete encasement will not be allowed.

C. When a sanitary force main must cross under a potable water line with less than an 18-inch vertical clearance, or over the water line, use a higher rated pressure pipe as in method 2 or 3 in subsection A.

D. When the water line being crossed in A, B or C is a house or building service lateral, 2-inch or smaller and the service lateral is a continuous piece of PE DR9 tubing, then the above rules do not apply; but locate so that the distance to a sewer or force main joint is as great as possible.

E. When a gravity sewer line must run parallel to and less than 18 inches below a potable water line and:

1. 6 to 10 feet apart for less than 40 feet, use method 1, 2 or 3 in subsection A.

2. 6 to 10 feet apart for over 40 feet, use method A2 and stagger joints.

3. 3 to 6 feet apart for any distance, use a higher rated pressure pipe as in method A2.

F. When a sanitary force main must run parallel to and less than 18 inches below a potable water line and:

1. 6 to 10 feet apart for any distance, use a higher rated pressure pipe as in method A2.

2. 3 to 6 feet apart, use a higher rated pressure pipe for both water and force main. Example: If force main is PC160 PVC DR26, and water line is C-900 DR25; then force main should be PVC DR21 and water line should be DR21, using extreme care to have both properly color-coded.

3.3 PIPE INSTALLATION

The contractor shall utilize equipment and methods in accordance with sound construction practices to insure pipe installation to line and grade as indicated.

3.3.1 Trench Excavation

Refer to Section 2221: Trench Excavation Backfill and Compaction. Maintain minimum of 30 inches and maximum of 36 inches of cover below finished grade unless shown otherwise on the construction plans.

3.3.2 Alignment

Pipe shall be installed along the alignment indicated by the construction plans. Accomplish horizontal and vertical changes in alignment of pipe with bends or other appropriate fittings. Limit joint deflection as recommended by the pipe manufacturer.

3.3.3 Pipe Preparation

The contractor shall clean the interior of all pipes, fittings, and joints prior to installation. Pipes shall be inspected for defects prior to installation. Damaged pipe shall be rejected and removed from the project.

3.3.4 Pipe Installation

Install pipe only when weather and trench conditions are suitable. Do not lay pipe in water. Join pipe in accordance with manufacturer's recommendations.

Provide initial backfill or anchoring as necessary to prevent displacement and preserve alignment after establishing final position.

Encase force main in steel casing or use ductile iron pipe when crossing under pipe, conduit, or structure when a 6-inch separation distance cannot be maintained. This protection shall extend a minimum of 5 feet beyond crossed structure.

3.3.5 Protection

Prevent the introduction of foreign matter into the pipe at all times. Close open ends of pipe with water tight fitting closures or plugs. Do not let water fill trench, but include provisions to prevent flotation should water control measures prove inadequate.

Remove water, sand, mud and other undesirable materials from trench before removal of pipe closure piece.

3.3.6 Cutting

PVC pipe shall be cut in a neat workmanlike manner, and the spigot end shall be beveled per manufacturer's recommendation. Ductile iron pipe shall be cut in accordance with manufacturer's recommendation. Do not allow excessive heat to develop. Smooth and bevel cut end by power grinding. Use of pipe with damaged lining is unacceptable.

3.3.7 Closure Pieces

Closure pieces shall only be used where called for on plans, or with written permission of the ECUA. Closure may be accomplished with sleeve coupling as long as its length is such that gaskets are not less than 3 inches from pipe ends.

3.3.8 Joint Restraints and Thrust Blocking

Joint restraints and/or thrust blocking must be provided at all horizontal or vertical turns utilizing fittings, and at tees, 90's, and dead-ends.

3.4 APPURTENANCE INSTALLATION

3.4.1 Valves

Valves shall be installed with operating stems vertical when installation is direct burial. Valves shall be installed on a suitable bearing surface so as to prevent vertical displacement.

A. Air Release Valves

Air release valves shall be located and installed at the down-stream end of all high points as shown in Details D-60 or D-61 for manual or automatic types respectively as indicated on the approved construction plans.

B. Check Valves

Check valves complete with vaults shall be installed at locations shown in the approved construction plans in accordance with the manufacturer's instructions.

3.4.2 Valve Boxes

Valve boxes shall be centered on the valve. The earth shall be compacted around each valve box to a distance of 4 feet on all sides of box, or to undisturbed trench face if less than 4 feet. An 18-inch diameter by 4-inch thick collar shall be constructed and sloped to direct water away from the valve box.

3.4.3 Tracer Wire

Tracer wire shall be installed on all new force mains. The tracer wire shall be placed directly above the pipe and electrically continuous throughout the project. The tracer wire shall be brought to the ground surface at each valve location in accordance with ECUA Standard Detail D-34. Splices and/or connections in the tracer wire shall be installed with silicone-filled wire nuts designed for direct burial.

3.5 TAPS ON PRESSURIZED LINES

The contractor shall perform taps on pressurized lines in accordance with these requirements. An ECUA representative shall be on-site during testing and cutting.

3.5.1 Materials

All materials used for taps on pressurized lines shall meet the requirements of these specifications. Tapping sleeves shall be properly sized for the pipe being tapped. (See Sec. 2.4.1.6) Resilient seated tapping valves shall be furnished with special end connections. (See Sec. 2.4.2.2) All other material used to accomplish the tap shall meet the relevant AWWA Standards.

3.5.2 Procedure

The contractor shall:

A. Expose the existing pipe at the location shown on the plans, and clean the section of the pipe to receive the tapping sleeve.

B. Check the tapping sleeve and valve for defects and make sure the gate fully retracts in the valve to allow the shell cutter free passage.

C. Assemble the tapping sleeve on the pipe, then install the tapping valve.

D. Pressure test the tapping sleeve and valve after it has been assembled on the force main using the test plug on the sleeve. The test pressure shall be 150 psi.

E. Pour a thrust block behind the tapping sleeve sufficient to withstand the pressure of the new line. Also, provide a suitable bearing surface sufficient to support the weight of the sleeve, valve, and tapping machine. Refer to Section 3.3.9 and ECUA Standard Detail D-43.

F. Assemble an approved tapping machine and proceed to make the necessary cut in accordance with the recommendation of the tapping machine manufacturer.

Approved tapping machines shall be:

1. in good working condition.
2. designed for and have a cutting bit for the pipe material to be cut.
3. equipped with a depth of cut gauge.
4. designed to capture the coupon.

PART 4: ACCEPTANCE REQUIREMENTS

4.1 INSPECTION

Upon completion of the installation, the system shall be inspected to ascertain that valves, fittings, air release valves, etc. are located in conformance with the plans, and confirm that all 'as-built' measurements have been taken. The ECUA Inspector shall

observe all appropriate activities related to properly placing the line in service including flushing, pressure and leakage testing. Final connections shall be accomplished after final clearance of lines. Tracer wire shall be tested for continuity.

4.2 FLUSHING

All newly installed force mains shall be flushed to remove any sediment, solids and/or foreign matter prior to testing. ECUA will make water available to the contractor. Flushing shall be conducted at a sufficient velocity to clear the pipe. Discharge of flushing water must be through a 2-inch diameter pipe or larger and must be controlled so as not to cause any property damage.

4.3 PRESSURE/LEAKAGE TEST

4.3.1 General

All newly installed force mains and appurtenances shall be pressure/leak tested to assure the strength of materials and quality of workmanship of the installation. Testing shall be conducted generally in accordance with ECUA Standard Detail D-12 and the requirements of AWWA Manual 23 for PVC and other flexible pipe or AWWA C600 for Ductile Iron Pipe. Leakage testing may be conducted concurrently with the pressure test.

4.3.2 Procedure

Tests are to be conducted in segments not to exceed three thousand (3,000) feet of pipe. Water in the new line shall be pumped up to a pressure of 100 psi. This pressure shall be maintained for a minimum of one (1) hour by pumping a quantifiable amount of water into the line and record the amount of water added during the test period. This represents the leakage.

Pressure/leakage tests shall be deemed acceptable when leakage does not exceed that determined by the following formula:

$$L = \frac{SD\sqrt{P}}{133200} \text{ (or 11.65 gpd/mi/inch/dia)}$$

or $$L = \frac{ND\sqrt{P}}{7400} \text{ for DI pipe 18' lengths}$$

or $$L = \frac{ND\sqrt{P}}{6600} \text{ for PVC pipe 20' lengths}$$

where:
- L = Maximum leakage, in gallons per hour.
- S = Length of pipe under test, in feet.
- N = Number of pipe joints in segment under test.
- D = Nominal internal diameter of pipe, in inches.
- P = Average actual leakage test pressure, psig.

Record all data for submission with as-built plans.

An ECUA Construction Inspector shall be present during test.

Refit and replace all pipe not meeting the leakage requirements. Repair clamps are not permitted.

Repair all visible leaks regardless of the amount of leakage.

PART 5: MEASUREMENT AND PAYMENT

5.1 GENERAL

Measurements shall be made to the nearest tenth of units and rounded to the nearest whole unit when totaled. Payments shall be for providing all labor, tools, equipment and materials as needed for: 1) furnishing, handling, and installing the required materials, fittings or fixtures; 2) excavation, backfill and compaction, including shoring, bracing and dewatering as required; 3) temporary removal and replacement of existing obstacles, including minor relocation and repair of other utilities; and 4) all required testing, and flushing. Payment for force main installations shall include the installation of tracer wire.

5.2 FORCE MAINS

Force mains shall be measured in lineal feet by the specified pipe size along the pipe centerline with no deduction for fittings. Payment shall be based on the contract unit price per lineal foot.

5.3 APPURTENANCES

Force main appurtenances include fittings and valves as outlined in Section 2.4 of the specifications. Incidental appurtenances such as joint restraints, couplings, tracer wire, etc. are not considered separate pay items and their cost should be included in the unit price of the installed pipe.

5.3.1 Fittings

Force main fittings including bends, reducers, tees, wyes, tapping sleeves, expansion joints, pipe hangers/supports, and cut in sleeves shall be measured and paid for on a unit (per each) basis. Fittings shall be listed by size and type.

5.3.2 Valves

Force main valves inclusive of any required valve boxes or other appropriate appurtenances shall be measured and paid for on a unit (per each) basis. Valves shall be listed by size and type.

5.4 TAPS ON PRESSURIZED LINES

Taps on pressurized lines shall be measured and paid for on a unit price (per each) basis to include tapping sleeve, tapping valve, and valve box complete, in-place. Taps shall be listed by main and branch diameters.

5.5 POLYETHYLENE WRAPPING

Polyethylene wrapping shall be measured along the centerline of the pipe. Payment will be based on the contract unit price per lineal foot.

5.6 DEWATERING

Well Point method shall be used when specified and bid item included. Measurement shall be in linear feet of pipe trench dewatered and payment by unit price per foot.

Screened and Packed Well Point method shall only be used when specifically indicated and bid item included. Measurement shall be in linear feet of pipe trench and vertical feet of screened and packed points and payment by unit price per foot.

Deep Well, Eductor Well Point, Bleeder Well or Vacuum methods will only be considered when specified.

Trench bottom sump pumps will not qualify for payment as dewatering.

SECTION 02577 - FIBERGLASS WET WELL

PART 1 - GENERAL

1.1 DESIGN

A. The fiberglass wet well shall be designed (signed and sealed) by a Florida Professional Engineer. Wet well weight and soil pressure on concrete base collar may be used to calculate down forces, but pump and piping weights shall not be used. Assume groundwater is at grade. A factor of safety of 1.2, minimum, must be used in anti-flotation calculations. The design shall include the operating conditions as noted on the drawings, a 12 inch minimum thick concrete base inside the wet well, a 12 inch minimum thick outside the wet well reinforced concrete hold-down base which extends 12-inches (minimum) beyond the outside of the wet well, a 10-inch (minimum) thick reinforced concrete top slab, pump access frame and cover and other standard wet well features as shown on the drawings. Pumps shall be anchored to a mounting plate (see details on the drawings). The complete design (signed and sealed by a Florida Professional Engineer) must be submitted in the form of a shop drawing for ECUA's review and approval. Fiberglass reinforced polyester wet wells shall be manufactured from commercial grade unsaturated polyester resin with fiberglass reinforcements. Unless approved otherwise by ECUA, the wet well shall be a one piece unit. Wet wells shall be manufactured by LFM, CSI, Xerxes or AFE.

1.2 MATERIALS

A. Resin: The resins used shall be commercial grade unsaturated polyester resins.

B. Reinforcing Materials: The reinforcing materials shall be a commercial Grade "E" type glass in the form of mat, continuous roving, chopped roving, roving fabric, or a combination of the above, having a coupling agent that will provide a suitable bond between the glass reinforcements and the resin.

C. Surfacing Materials: If reinforcing materials are used on the surface exposed to the contained substance, it shall be a commercial grade chemical-resistant glass that will provide a suitable bond with the resin and leave a resin rich surface.

D. Fillers and Additives: Fillers, when used, shall be inert to the environment and wet well construction. Additives, such as thixotropic agents, catalysts, promoters, etc., may be added as required by the specific manufacturing process to be used. The resulting reinforced plastic material must meet the requirement of this specification.

1.3 RELATED REQUIREMENTS SPECIFIED ELSEWHERE

A. Excavation, Backfilling and Compaction: Section 02221
B. Water Distribution Lines/Service Lines: Section 02556

C. Gravity Sanitary Sewer: Section 02570
D. Sanitary Force Main: Section 02576
E. Wastewaer Lift Station: Section 02575
F. Fencing: Section 02830
G. Cast-in-Place Concrete: Section 03300
H. Electrical - Sections 16010-16050

1.4 QUALITY ASSURANCES

Comply with the latest published editions of AWWA and ASTM Standards

A. ASTM D883: Standard Terminology Related to Plastics
B. ASTM D3299: Standard Specification for Filament-Wound Glass-Fiber-Reinforced Thermoset Resin Corrosion-Resistant Tanks
C. ASTM D3753: Standard Specifications for Glass-Fiber-Reinforced Polyester Manholes and Wet Wells
D. ANSI / AWWA D120-09: AWWA Standard for Thermosetting Fiberglass-Reinforced Plastic Tanks

1.5 FABRICATION

A. Exterior Surface: The exterior surface shall be relatively smooth with no sharp projections. Hand-work finish is acceptable if enough resin is present to eliminate fiber show. The exterior surface shall be free of blisters larger than 1/2 inch in diameter, delamination and fiber show.

B. Interior Surface: The interior surface shall be resin rich with no exposed fibers. The surface shall be free of crazing, delamination, blisters larger than 1/2 inch in diameter, and wrinkles of 1/8 inch or greater in depth. Surface pits shall be permitted if they are less that 3/4 inch in diameter and less than 1/16 inch deep.

C. Defects Not Permitted:

Exposed fibers: glass fibers not wet out with resin.
Resin runs: runs of resin and sand on the surface.
Dry areas: areas with glass not wet out with resin.
Delamination: separation in the laminate.
Blisters: light colored areas larger than ½ inch in diameter.
Crazing: cracks caused by sharp objects.
Pits or Voids: air pockets.
Wrinkles: smooth irregularities in the surface.
Sharp Projection: fiber or resin projections necessitating gloves for handling.

D. Installation of Brackets: Manufacturer or manufacturer certified field personnel shall glass in all stainless steel fasteners and brackets, discharge piping brackets, etc. Manufacturer of wet well shall be responsible for integrity of all field glassing.

E. Markings: Each wetwell shall have wetwell data integrated into fiberglass and affixed to top inside and top outside walls. Data required includes manufacturer's name, ASTM designation, production and/or serial number, production date, length and diameter, and warranty length. Product data shall not be written in ink or paint. Production/serial numbers shall be kept on file by manufacturer for a minimum of 20 years and shall be accompanied by project data for future reference and recall.

The following is an example:

ABC Manufacturing
ASTM D3753
Serial # ABC20083461
Production date: October 22, 2008
Depth = 22'
Diameter = 10'
20 Year Warranty

1.6 PHYSICAL REQUIREMENTS

A. Load Rating: The complete wet well shall have a minimum dynamic-load rating of 16,000 ft-lbs when tested in accordance with ASTM 3753, Section 8, test methods D 790 and D 695. To establish this rating the complete wet well shall not leak, crack, or suffer other damage when load tested to 40,000 ft-lbs and shall not deflect vertically downward more than 1/4 inch at the point of load application when loaded to 24,000 lbs.

B. Stiffness: The wet well cylinder shall have a minimum pipe-stiffness value as shown in Table 1 (at a minimum) when tested in accordance with ASTM D3757, Section 8.

Table 1 - Stiffness Requirements:

Length - Ft.	F/AY - PSI
10 to 20	2.01
21 to 30	3.02
31 to 40	5.24

Physical Properties :

	Hoop Direction	Axial Direction
a. Tensile Strength (psi)	18,000	5,000
b. Tensile Modules (psi)	0.8×10^6	0.7×10^6
c. Flexural Strength (psi)	26,000	4,500
d. Flexural Modules (psi)		
(no ribs - 48", 60", 72") (psi)	1.4×10^6	0.7×10^6
(with ribs - 96", 144") (psi)	0.7×10^6	0.7×10^6

1.7 FIBERGLASS CONSTRUCTION METHODS

A. Handling: The wet well shall not be dropped or impacted. Wet wells shall be chocked if stored horizontally. If wet wells must be moved by rolling, the ground transverses shall be smooth and free of rocks, debris, etc. FRP wet wells may be lifted by the installation of three lifting lugs as specified by the manufacturer on the outside surface near the top or by a sling or "choker" connection around the center. Use of chains or cables in contact with the wet well surface is prohibited. Wet wells may be lifted horizontally using one support point.

B. Wet Well Installation: Bottom of excavation should be compacted to 95% Standard Proctor Density. Pour reinforced concrete base a minimum of one foot deep and at least two feet in diameter larger than the fiberglass wet well outside diameter. As soon as the concrete has set-up enough to support the fiberglass wet well, lower the wet well into place. (Wet wells with fiberglass bottoms, should have rebar inserted into bottom reinforcement.) Pour a minimum of one foot of reinforced concrete on the inside, also a minimum of one foot deep and two feet from the fiberglass wet well wall on the outside of the fiberglass wet well. Insert "RAMNEK" type sealant on the outside of the fiberglass wet well around the bottom where the fiberglass and concrete come together.

C. Wet Well Cutouts: Cutouts in wet well wall should be made with proper cutting tools such as jigsaw or hole saw. Do not use axe or other impact-type tools.

D. Pipe Installation: Discharge wall penetrations are to have sleeves large enough to accept O.D. of pipe discharge flange. All discharge sleeves shall be sealed via a gas tight-water tight Link Seal system or approved equal. Influent pipe connections shall be made with an NPC Kor-N-Seal Boot with stainless steel band or approved equal.

1.8 DESIGN FEATURES

A. Top Slab Support: Pour reinforced concrete slab support a minimum of two feet outside of fiberglass wet well wall and minimum of six inches thick.

B. Design: Fiberglass wet well system to be designed, signed and sealed by a Professional Engineer registered in the State of Florida. Resistance to floatation and traffic or pedestrian loading requirements shall be addressed in the design.

C. Wet Well Top: Wet well top shall be concrete and designed for 300 PSf or H-2O Traffic loading as noted on the drawings. Hatches shall be as specified in this specification and as detailed on the contract drawings. Bottom of top slab and around side of hatch opening shall be fiberglass lined and shall meet all the requirements of this specification.

1.9 WARRANTY

A. The fiberglass manufacturer shall warrant the fiberglass wet well against defects for at least twent (20) years after the date of acceptance by ECUA. Defects are defined as cracking, delaminating, or leaking. The warranty shall require the manufacturer to supply all necessary labor, materials, and equipment to repair defects to the satisfaction of ECUA. The Contractor and/or manufacturer shall not make any exemption or exception to the above stated conditions or warranty. Manufacturer's recommended installation procedures to assure 20-year warranty provided to ECUA to be included in submittal package.

PART 2 - EXCAVATION

2.1 GENERAL

A. The limit of excavation shall be such to allow for placing and removing forms, installing sheeting, shoring, bracing, etc. The Contractor shall pile excavated material in a manner that will not endanger the work and will avoid obstructing sidewalks, driveways, power poles, etc. Drainage shall be kept clear.

2.2 VERTICAL SIDES (SHEETING, SHORING AND BRACING)

A. When necessary to protect existing or proposed structures or other improvements, the Contractor shall maintain vertical sides of the excavation. The limit shall not exceed three feet outside the footing on a vertical plane parallel to the footing except where specifically approved otherwise by the Engineer. The Contractor shall provide and install any sheeting, shoring, and bracing as necessary to provide a safe work area as required protecting workers, structures, equipment, power design and adequacy of all sheeting, shoring, and bracing. For excavations deeper than 20 vertical feet, which utilize sheeting, shoring or bracing, the sheeting, shoring and bracing plan shall be

designed by a Florida Professional Engineer, (signed and sealed). This plan shall be submitted to ECUA for review and approval, prior to construction. The construction of sheeting, shoring and bracing shall be in accordance with the approved plan. All major field modifications shall be approved by the Professional Engineer. The sheeting, shoring, and bracing shall be removed as the excavation is backfilled in such manner as to prevent injurious caving. Excavation shall meet the Florida Trench Safety Act (an OSHA requirement) and OSHA Excavation Standards (29 CFR sub-part P 1926.650) at a minimum.

2.3 SLOPING SIDES

A. Where sufficient space is available, the Contractor shall be allowed to back slope the sides of the excavation. The back slope shall be such that the excavation shall be safe from caving. The type of material being excavated shall govern the back slope used, but in any case the back slope shall be no steeper than 1 foot horizontal to 1 foot vertical without sheeting or shoring.

2.4 DE-WATERING

A. The Contractor shall keep excavation free from water by use of cofferdams, bailing, pumping, well pointing, or any combination as the particular situation may warrant. All de-watering devices shall be installed in such a manner as to provide clearance for construction, removal of forms, and inspection of exterior of form work. It is the intent of these specifications that the foundation be placed on a firm dry bed. The foundation bed shall be kept in a de-watered condition a sufficient period of time to ensure the safety of the structure. The excavation shall be protected from excessive rainfall, drainage and drying. The excavation shall be inspected and approved by ECUA's representative before work on the structure is started. It is the intent of these specifications that the Contractor provides a relatively smooth, firm foundation bed for footing and slabs that bear directly on the undisturbed earth without additional cost, regardless of the soil conditions encountered. The Engineer will be the sole judge as to whether these conditions have been met.

2.5 UNAUTHORIZED EXCAVATION

A. Excavation for slabs, footings, etc., that bear on earth shall not be carried below the elevation shown on the drawings. In the event the excavation is carried on below the indicated elevation, the Contractor shall bring the slab, footing etc., to the required grade by filling with concrete having a minimum compressive strength of at least 3,000 PSI at 28 days.

PART 3 - BACKFILL

3.1 BACKFILL MATERIAL

A. Unless shown otherwise on the drawings, suitable soil (A-3 sand only, no clay or rocks larger than 3/4" size) shall be used for backfill around the wet well for a distance of two feet from the outside surface and extending from bottom of the excavation to the bottom of the top slab. The material chosen shall be free of large lumps or clods, which will not readily break down under compaction. This material will be subject to approval by the Engineer. Backfill material shall be free of vegetation or other extraneous material. Excavation materials which are to be used for fill or backfill may be stockpiled on site. Top soil should be stockpiled separately and used for finish grading around the structure.

3.2 SCHEDULE OF BACKFILLING

A. The Contractor may begin backfilling of wet well as soon as the concrete has been allowed to cure and the forms removed.

3.3 BACKFILL

A. Backfill shall be placed in layers of not more than 12 loose measure inches and mechanically tamped to at least 95% Standard Proctor Density. Flooding will not be permitted. Backfill shall be placed in such a manner as to prevent any wedging action against the structure.

SECTION 3300

CAST-IN-PLACE CONCRETE

PART 1: GENERAL

1.01 General Description of Work Covered: Mixing, placing, finishing and providing all related services necessary to construct all cast-in-place concrete work indicated on plans.

1.02 Quality Assurance

A. Comply with the latest published edition of the American Concrete Institute (ACI) and American Society of Testing and Materials (ASTM) standards and codes:

1. ACI 301 - Specification for Structural Concrete for Buildings
2. ACI 305 - Placing Concrete in Hot Weather
3. ACI 306 - Placing Concrete in Cold Weather
4. ACI 318 - Building Code Requirements for Reinforced Concrete

B. Manufacturer's Data: Submit manufacturer's product data with installation instructions for proprietary materials including reinforcement and forming accessories, admixtures, joint materials, hardeners, curing materials and others as requested by Engineer.

C. Laboratory Reports: Submit 2 copies of laboratory test or evaluation reports for concrete materials and mix designs as requested by Engineer.

D. Mix Proportions and Design: Proportion mixes complying with mix design procedures specified in ACI 301.

1. Submit written report to Engineer for each proposed concrete mix at least 15 days prior to start of work. Do not begin concrete production until mixes have been reviewed and are acceptable to Engineer.
2. Mix designs may be adjusted when material characteristics, job conditions, weather, test results or other circumstances warrant. Do not use revised concrete mixes until submitted to and accepted by Engineer.
3. Use air-entering admixture in all concrete, providing not less than 4 percent nor more than 6 percent entrained air for concrete exposed to freezing and thawing, and from 2 percent to 4 percent for other concrete.

E. Concrete Testing Service: Employ acceptable testing laboratory to perform materials evaluation, testing and design of concrete mixes. (When required by Owner).

1. Sampling: ASTM C 172
2. Slump: ASTM C 143, one test for each load at point of discharge.
3. Air Content: ASTM C 173, one for each set of compressive strength specimens.

4. Compressive Strength: ASTM C 39, one set for each cu. yds. or fraction thereof of each class of concrete; one specimen tested at 7 days, one specimen tested at 28 days, and one retained for later testing if required.

5. When the total quantity of a given class of concrete is less than 50 cu. yds., strength tests may be waived by Engineer if field experience indicates evidence of satisfactory strength.

6. Test results will be reported in writing to Engineer, Contractor, and concrete producer within hours after tests are made.

2.01 Products

A. Portland Cement: ASTM C 150, type as required.

B. Fly Ash: ASTM C 618, Type C or F.

C. Limit use of fly ash in concrete mix design to not exceed 25 percent of cement content by weight.

D. Aggregates: ASTM C 33, except local aggregates of proven durability may be used when acceptable to Engineer.

2.02 Water: Potable.

2.06 Admixtures

A. Air-Entraining Admixture: ASTM C 260.

B. Water-Reducing Admixture: ASTM C 494, type as required to suit project conditions. Only use admixtures which have been tested and accepted in mix designs, unless otherwise acceptable. Superplasticizers are not permitted without prior approval of Engineer.

2.07 Related Materials

A. Waterstops: Flat dumbbell or centerbulb type, size to suit joints, of either rubber (CRD C 513) or PVC (CRD C.

B. Moisture Barrier: Clear 8-mils thick polyethylene; polyethylene-coated barrier paper; or 1/8" thick asphalt core membrane sheet.

C. Membrane-Forming Curing Compound: ASTM C 309, Type I.

D. Joint Fillers

1. Joint Sealer: Hot poured, non-extruding, elastic, ASTM D 1190.

2. Performed Expansion Joint Filler: Non-extruding, bituminous fiber, ASTM D 1751.

E. Provide form materials with sufficient stability to withstand pressure of placed concrete without bow or deflection.

F. Exposed Concrete Surfaces: Material to suit project conditions.

2.08 Reinforcing Materials

A. Deformed Reinforcing Bars: ASTM A 615, Grade 60, unless otherwise indicated.

B. Welded Wire Fabric: ASTM A 185.

2.09 Forming and Placing Concrete

A. Job-Site Mixing: Use drum type batch machine mixer, mixing not less than 1« minutes for one cu. yd. or smaller capacity. Increase mixing time at least 15 seconds for each additional cu. yd. or fraction thereof.

B. Ready-Mix Concrete: ASTM C 94.

C. Formwork: Construct so that concrete members and structures are of correct size, shape, alignment, elevation and position.

1. Provide openings in formwork to accommodate work of other trades. Accurately place and securely support items built into forms.

2. Clean and adjust forms prior to concrete placement. Apply form release agents or wet forms, as required. Retighten forms during concrete placement if required to eliminate mortar leaks.

D. Reinforcement: Position, support and secure reinforcement against displacement. Locate and support with metal chairs, runners, bolsters spacers and hangers, as required. Set wire ties so ends are directed into concrete, not toward exposed concrete surfaces.

E. Install welded wire fabric in as long lengths as practicable, lapping at least one mesh at both ends and sides. Tie or interlace at laps.

F. Joints: Provide construction, isolation, and control joints as indicated or required. Locate construction joints so as to not impair strength and appearance of structure. Locate isolation and control joints in slabs-on-ground to accommodate differential settlement and prevent random cracking.

G. Installation of Embedded Items: Set and build into work anchorage devices and other embedded items required for other work that is attached to, or supported by cast-in-place concrete. Use setting diagrams templates and instructions provided by others for locating and setting.

H. Concrete Placement: Comply with ACI, placing concrete in a continuous operation within planned joints or sections. Do not begin placement until work of other trades affecting concrete is completed.

I. Consolidate concrete using mechanical vibrating equipment, hand rodding and tamping, so that concrete is well compacted around reinforcement and other embedded items and into forms.

J. Protect concrete from physical damage or reduced strength due to weather extremes during mixing, placement and curing.

1. In cold weather comply with ACI 306.

2. In hot weather comply with ACI 305.

2.10 Concrete Finishes

A. Exposed-to-view Surfaces: Provide a smooth finish for exposed concrete surfaces and surfaces that are to be covered with a coating or covering material applied directly to concrete. Remove fins and projections, patch defective areas with cement grout, and rub smooth.

B. Slab Trowel Finish: Apply trowel finish to monolithic slab surfaces that are exposed-to-view or are to be covered with resilient flooring, paint or other thin film coating. Consolidate concrete surfaces by floating then finish troweling, free of trowel marks and uniform in texture and appearance.

C. Broom Finish: Apply broom finish to monolithic slab surfaces that are exposed to view and subject to vehicular or pedestrian traffic. Consolidate concrete surfaces by floating and troweling prior to applying broom finish.

D. Curing: Begin initial curing as soon as free water has disappeared from exposed surfaces. Where possible, keep continuously most for not less than 72 hours. Continue curing by use of moisture-retaining cover or membrane-forming curing compound. Cure formed surfaces by moist curing until forms are removed. Provide protections as required to prevent damage to exposed concrete surfaces.

16010 - BASIC ELECTRICAL REQUIREMENTS

PART 1 - GENERAL

1.1 RELATED DOCUMENTS

A. Drawings and general provisions of the Contract, including General and Supplementary Conditions and Division 1 Specification Sections, apply to this Section.

1.2 SCOPE

A. This scope covers the furnishing, installation, testing, adjusting and placing in operation all electrical equipment, devices, facilities, materials, and auxiliary items necessary for the complete and successful operation of all electrical equipment as herein described, shown on the plans, or deemed necessary for the completion of the electrical portion of the project. It is the intent of DIVISION 16 to outline the electrical requirements of the contract in order to provide the information necessary for the construction of a fully operational system as shown on the plans and as herein described. A comprehensive electrical scope of work is as follows:

1. Power/Electrical System
2. Lighting System
3. Control System
4. Instrumentation System
5. Utility Work
6. Connection of Electrically Powered Mechanical Equipment
7. Temporary Construction Power
8. All Incidentals Necessary for a Complete and Fully Operational Electrical System.

1.3 DEFINITIONS

A. LED: Light Emitting Diode.

1.4 WORKING CLEARANCES

A. Working clearances around equipment requiring electrical services shall be verified by Contractor to comply with Code requirements. Should there be apparent violations of clearances; the Contractor shall notify the OWNER before proceeding with connection or placing of equipment.

B. In the case of circuit breakers, safety switches and other equipment requiring wire and cable terminations, the Contractor shall ascertain that lug sizes and wiring gutters or

space allowed for proper accommodation and termination of the wires and cables are adequate.

1.5 WORKMANSHIP

A. Workmanship under this Division shall be accomplished by persons skilled in the performance of the required task. All work shall be done in keeping with conventions of the trade. Work of this Division shall be closely coordinated with work of other trades to avoid conflict and interference.

1.6 PROTECTION OF ELECTRICAL EQUIPMENT

A. Electrical equipment shall be protected by the weather, especially from water dripping or splashing upon it, at all times during shipment, storage and after installation. Should any apparatus be subjected to possible injury by water, it shall be thoroughly dried out and put through a dielectric test, at the expense of the contractor, to ascertain the suitability of this apparatus. The results of the test shall be submitted to the Engineer and if the apparatus is found to be unsuitable, the contractor shall replace it without additional cost to the Owner.

1.7 UTILITIES

A. The Contractor shall provide a fully operational electrical service as described in the plans.
   1. Coordinate with the utility company for the services and install the service in accordance with their requirements, regulations and recommendations.

1.8 GUARANTEE

A. Contractor shall guarantee all lighting fixture drivers and LEDs for a period of one (5) years after the lift station is in service. Guarantee shall include material and labor for replacing drivers and LEDs or associated LED bar.

B. The Contractor shall guarantee all other electrical systems, materials and workmanship to be free from defects for a period of one (1) year from the date of final acceptance. He shall correct all defects arising within this period upon notification by the Owner, without additional compensation.

C. It is understood that the rights and benefits given the Owner by the guarantees found in the technical specifications are in addition to and not in derogation of any rights or benefits found in the special and general provisions of the contract.

1.9 TEMPORARY DURING CONSTRUCTION

A. It shall be the responsibility of the Contractor to provide and maintain adequate temporary lighting at all times during construction, so that the various other trades can accomplish their work in a flawless manner. All utility installation costs and monthly bills shall be included as part of the responsibility.

1.10 MATERIAL STANDARDS

A. Material shall be new and comply with standards of Underwriters' Laboratories, Inc., where standards have been established for the particular product and the various NEMA, ANSI, ASTM, IEEE, AEIC, IPCEA or other publications referenced.

1.11 TEST EQUIPMENT

A. The contractor shall provide all test equipment and supplies deemed necessary by the Owner or Engineer at no extra cost to the Owner. These supplies shall include but not be limited to the following: volt meters, amp meters, light meters, fuel, generator load banks, watt meters, harmonic distortion test equipment, thermal image camera, high pot test equipment, power quality analyzers, and oscilloscopes.

1.12 REFERENCES

A. ANSI/NFPA 70 – National Electrical Code

B. ANSIC2 – National Electrical Safety Code

C. EPA – Environmental Protection Agency

D. FDEP – Florida Department of Environmental Protection

E. NFPA 820 – Standard for Fire Protection in Wastewater Treatment and Collection Facilities

F. NEMA – National Electrical Manufacturer's Association.

G. NFPA – National Fire Protection Association

H. IEEE – The Institute of Electrical and Electronics Engineers

I. IESNA – The Illuminating Engineering Society of North America

J. NETA – International Electrical Testing Association

K. UL – Underwriters' Laboratories

L. Recommended Standards for Water Works and Wastewater Facilities as published by Great Lakes – Upper Mississippi River Board of State Public Health and Environmental Managers.

1.13 SUBMITTAL

A. Submit under provisions of the General Provisions.
   1. The Contractor installing all Electrical work shall review and approve all electrical shop drawings prior to submittal to the Engineer for review. As part of the review, the installer shall certify the following:
      a. I hereby certify that the equipment and devices shown and marked in this submittal is in compliance with the contract drawing and specifications, can be installed in the allocated space, will be stored in accordance with the manufacturers recommendation, will be installed per NEC, and is submitted for approval.

         Certified by:_____Date: _____

B. Submit shop drawings and product data grouped to include complete submittal of related systems, products, and accessories in a single submittal. No electrical work may be performed until shop drawings are approved. Submit Shop Drawings on the Following Systems as Grouped Below:
   1. Power/Electrical System
      a. Conduit and Conduit Fittings
      b. Wire/Conductors
      c. Pull Boxes
      d. Control Panel Layouts
      e. Support Racks Materials
      f. Conduit Support Systems
      g. Transformers
      h. Surge Protection Devices
   2. Generator Equipment
      a. Generator
      b. Generator Enclosure
      c. Fuel System Tank & Piping
      d. Transfer Switches
   3. Lighting System
      a. All Light Fixtures
      b. Site Poles & Foundations
   4. Control System
      a. Control Panels
      b. Generator Receptacle
      c. Circuit Breakers
      d. Across-The-Line Starters
      e. Fuses
      f. Power Distribution Blocks

g. Surge Protection Devices
h. 24VDC Power Supplies
i. Batteries
j. Converters
k. PLC
l. Software
m. HMI
n. I/O Racks
o. Relays
p. Intrinsically Safe Barrier Relays
q. Seal Fail Relays
r. Pressure Tansducers
s. Float Switches
t. Momentary Push Buttons
u. Hand-Off-Automatic Selectors
v. On-Off Selectors
w. Limit Switches
x. Alarm Lights
y. Wiring Devices
z. Control Point-to-Point Drawings
aa. Conductors with Color Indications
bb. Radio
cc. Conduit Penetration Areas
dd. Air Break Seal System

5. Miscellaneous Electrical Equipment
   a. Miscellaneous Electrical Parts

6. Drawings
   a. Coordination drawing of All Electrical Items in relation to Site
   b. Conduit layout drawings
   c. Conduit penetration locations into wet well

C. Mark dimensions and values in units to match those specified.

1.14 REGULATORY REQUIREMENTS

1. Obtain permits, and request inspections from authority having jurisdiction.
2. References listed.

1.15 FINAL INSPECTION AND TESTING

A. After the electrical installation is complete, the CONTRACTOR shall deliver to the ENGINEER and OWNER the following information with his request for final inspection.

1. One set of contract drawings marked to show all significant changes in equipment ratings and locations, alterations in locations of conduit runs, or of any data differing from the contract drawings.

2. Certificates of final inspection from local Authority Having Jusitiction.
3. A tabulation of all motors listing their respective manufacturer, horsepower, nameplate voltage and current, actual running current after installation and overload heater rating.

B. The electrical work shall be thoroughly tested to demonstrate that the entire system is in proper working order and in accordance with the plans and specifications. Each motor with its control shall be run as nearly as possible under operating conditions for a sufficient length of time to demonstrate correct alignment, wiring capacity, speed and satisfactory operation. All main switches and circuit breakers shall be operated, but not necessarily at full load. Contractor may be required during final inspection, at the request of the Engineer or Owner to furnish test instruments for use during the testing.

1.16 STAFFING

A. The electrical contractor shall provide a "Master Electrician" who has been deemed a "Master Electrician" by exam through the State of Florida, or any other Florida County Permitting Authority as the Electrical Superintendent for the project. The Electrical Superintendent shall be on the project site any time any electrical work is performed by the contractor.

B. In addition, the contractor shall provide one Journeyman electrician for every four electrical helpers used on the project site.

C. The electrical contractor is required and expected to read all other equipment specifications contained in these documents and provide all required power and control conductors required by said equipment to allow them to function as described.

1.17 AS-BUILT DRAWINGS

A. The contractor shall provide detailed as-built drawings for the project indicating all power wiring. (All Drawings shall be delivered to the Owner in an AutoCAD 2007 Format.)

B. The As-Built drawings shall include detailed drawings of all underground conduit, above ground conduit, control panels, and control drawings.

C. The Owner will provide electronic copies of all drawings in the plans set on a CD for use by the contractor.

END OF SECTION 16010

16050 - BASIC ELECTRICAL MATERIALS AND METHODS

PART 1 - GENERAL

1.1 RELATED DOCUMENTS

A. Drawings and general provisions of the Contract, including General and Supplementary Conditions and Division 1 Specification Sections, apply to this Section.

1.2 SUMMARY

A. Section Includes:
   1. Electrical equipment coordination and installation.
   2. Common electrical installation requirements.
   3. Concrete equipment bases.
   4. Touch-up paint.

1.3 DEFINITIONS

A. EPDM: Ethylene-propylene-diene terpolymer rubber.

B. NBR: Acrylonitrile-butadiene rubber.

1.4 SUBMITTALS

A. General: Submit each item in this Article according to the Conditions of the Contract and Division 1 Specification Sections.

B. Shop Drawings detailing fabrication and installation of supports and anchorage for electrical items.

C. Samples of color, lettering style, and other graphic representation required for each identification product for Project.

D. Coordination Drawings for electrical installation.
   1. Prepare Coordination Drawings according to "Submittals" to a 1/4-inch-equals-1-foot (1:50) scale or larger. Detail major elements, components, and systems of electrical equipment and materials in relation to each other and to other systems and installations. Indicate locations and space requirements for installation, access, and working clearance. Show where sequence and coordination of installations are important to the efficient flow of the Work. Coordinate drawing preparation with effort specified in other Specification Sections. Include the following:

a. Provisions for scheduling, sequencing, moving, and positioning equipment to the site during construction.
b. Plans, elevations, and details, including the following:
   1) Clearances to meet safety requirements and for servicing and maintaining equipment, including space for equipment disassembly required for periodic maintenance.
   2) Sizes and locations of required concrete pads and bases.
   3) Cross section of underground ducts at all pipe crossings showing clearance.

1.5 COORDINATION

A. Coordinate arrangement, mounting, and support of electrical equipment:
   1. To provide for ease of disconnecting the equipment with minimum interference to other installations.
   2. To allow right of way for piping and conduit installed at required slope.
   3. So connecting raceways, cables, and wireways will be clear of obstructions and of the working and access space of other equipment.

1.6 QUALITY ASSURANCE

A. Comply with NFPA 70 for components and installation.

B. Listing and Labeling: Provide products specified in this Section that are listed and labeled.
   1. The Terms "Listed and Labeled": As defined in the National Electrical Code, Article 100.

1.7 SEQUENCING AND SCHEDULING

A. Coordinate electrical equipment installation with other components.

B. Arrange for chases, slots, and openings in structures during progress of construction to allow for electrical installations.

C. Coordinate installing required supporting devices and set sleeves in poured-in-place concrete and other structural components as they are constructed.

D. Sequence, coordinate, and integrate installing electrical materials and equipment for efficient flow of the Work. Coordinate installing large equipment requiring positioning prior to closing in the building.

E. Coordinate connecting electrical service to components furnished under other Sections.

PART 2 - PRODUCTS

2.1 CONCRETE EQUIPMENT BASES

A. Forms and Reinforcing Materials: As specified in Division 3 Section "Cast-in-Place Concrete."

B. Concrete: 3000-psi, 28-day compressive strength as specified in Division 3 Section "Cast-in-Place Concrete."

2.2 TOUCH-UP PAINT

A. For Equipment: Provided by equipment manufacturer and selected to match equipment finish.

B. For Non-equipment Surfaces: Matching type and color of undamaged, existing adjacent finish.

PART 3 - EXECUTION

3.1 COMMON REQUIREMENTS FOR ELECTRICAL INSTALLATION

A. Comply with NECA 1.

B. Measure indicated mounting heights to bottom of unit for rack mounted items and lighting fixture for pole mounted items fixtures.

C. Equipment: Install to facilitate service, maintenance, and repair or replacement of components of both electrical equipment and other nearby installations. Connect in such a way as to facilitate future disconnecting with minimum interference with other items in the vicinity.

D. Install items level, plumb, and parallel and perpendicular to other systems and components, except where otherwise indicated.

E. Right of Way: Give to piping systems installed at a required slope.

3.2 TOUCH-UP PAINTING

A. Thoroughly clean damaged areas and provide primer, intermediate, and finish coats to suit the degree of damage at each location.

B. Follow paint manufacturer's written instructions for surface preparation and for timing and application of successive coats.

3.3 CUTTING AND PATCHING

A. Drill slabs and other surfaces necessary for electrical installations. Perform cutting by skilled mechanics of the trades involved.

B. Repair disturbed surfaces to match adjacent undisturbed surfaces.

C. Concrete Slabs: Core-drill holes or form openings.

END OF SECTION 16050

SECTION 16055 - OVERCURRENT PROTECTIVE DEVICE COORDINATION

PART 1 - GENERAL

1.1 RELATED DOCUMENTS

A. Drawings and general provisions of the Contract, including General and Supplementary Conditions and Division 1 Specification Sections, apply to this Section.

1.2 SUMMARY

A. This Section includes computer-based, fault-current and overcurrent protective device coordination studies. Protective devices shall be set based on results of the protective device coordination study.
   1. Coordination of series-rated devices is permitted where indicated on Drawings.

1.3 SUBMITTALS

A. Product Certificates: For coordination-study and fault-current-study computer software programs, certifying compliance with IEEE 399.

B. Qualification Data: For coordination-study specialist.

C. Submittals: Submittals shall be in paper and electronic forms.
   1. Coordination-study input data, including completed computer program input data sheets.
   2. Study and Equipment Evaluation Reports.
   3. Coordination-Study Report (breaker curves in color).
   4. Provide Electronic Study for Engineer and Owner Review.

1.4 QUALITY ASSURANCE

A. Studies shall use computer programs that are distributed nationally and are in wide use. Software algorithms shall comply with requirements of standards and guides specified in this Section. Manual calculations are not acceptable.

B. Coordination-Study Specialist Qualifications: An entity experienced in the application of computer software used for studies, having performed successful studies of similar magnitude on electrical distribution systems using similar devices.
   1. Professional engineer, licensed in the state of Florida, shall be responsible for the study. All elements of the study shall be performed under the direct supervision and control of engineer.

C. Comply with IEEE 242 for short-circuit currents and coordination time intervals.

D. Comply with IEEE 399 for general study procedures.

PART 2 - PRODUCTS

2.1 COMPUTER SOFTWARE DEVELOPERS

A. Product: Subject to compliance with requirements, provide by one of the following:
   1. SKM Systems Analysis, Inc.

PART 3 - EXECUTION

3.1 EXAMINATION

A. Examine Project overcurrent protective device submittals for compliance with electrical distribution system coordination requirements and other conditions affecting performance.
   1. Proceed with coordination study only after relevant equipment submittals have been assembled. Overcurrent protective devices that have not been submitted and approved prior to coordination study may not be used in study.

3.2 POWER SYSTEM DATA

A. Gather and tabulate the following input data to support coordination study:
   1. Product Data for overcurrent protective devices specified in other Division 16 Sections and involved in overcurrent protective device coordination studies. Use equipment designation tags that are consistent with electrical distribution system diagrams, overcurrent protective device submittals, input and output data, and recommended device settings.
   2. Impedance of utility service entrance.
   3. Electrical Distribution System Diagram: In hard-copy and electronic-copy formats, showing the following:
      a. Circuit-breaker and fuse-current ratings and types.
      b. Relays and associated power and current transformer ratings and ratios.
      c. Transformer kilovolt amperes, primary and secondary voltages, connection type, impedance, and X/R ratios.
      d. Generator kilovolt amperes, size, voltage, and source impedance.
      e. Cables: Indicate conduit material, sizes of conductors, conductor material, insulation, and length.
      f. Motor horsepower and code letter designation according to NEMA MG 1.

4. Data sheets to supplement electrical distribution system diagram, cross-referenced with tag numbers on diagram, showing the following:
   a. Special load considerations, including starting inrush currents and frequent starting and stopping.
   b. Transformer characteristics, including primary protective device, magnetic inrush current, and overload capability.
   c. Motor full-load current, locked rotor current, service factor, starting time, type of start, and thermal-damage curve.
   d. Generator thermal-damage curve.
   e. Ratings, types, and settings of utility company's overcurrent protective devices.
   f. Special overcurrent protective device settings or types stipulated by utility company.
   g. Time-current-characteristic curves of devices indicated to be coordinated.
   h. Manufacturer, frame size, interrupting rating in amperes rms symmetrical, ampere or current sensor rating, long-time adjustment range, short-time adjustment range, and instantaneous adjustment range for circuit breakers.
   i. Manufacturer and type, ampere-tap adjustment range, time-delay adjustment range, instantaneous attachment adjustment range, and current transformer ratio for overcurrent relays.
   j. Control panel ampacity and interrupting rating in amperes rms symmetrical.

3.3 FAULT-CURRENT STUDY

A. Calculate the maximum available short-circuit current in amperes rms symmetrical at circuit-breaker positions of the electrical power distribution system. The calculation shall be for a current immediately after initiation and for a three-phase bolted short circuit at each of the following:
   1. Control Panel.

B. Study electrical distribution system from normal and alternate power sources throughout electrical distribution system for Project. Include studies of system-switching configurations and alternate operations that could result in maximum fault conditions.

C. Calculate momentary and interrupting duties on the basis of maximum available fault current.

D. Calculations to verify interrupting ratings of overcurrent protective devices shall comply with IEEE 141 and IEEE 242.
   1. Transformers:
      a. ANSI C57.12.10.
      b. ANSI C57.12.22.
      c. ANSI C57.12.40.
      d. IEEE C57.12.00.
      e. IEEE C57.96.

2. Low-Voltage Circuit Breakers: IEEE 1015 and IEEE C37.20.1.
3. Low-Voltage Fuses: IEEE C37.46.

E. Study Report:
1. Show calculated X/R ratios and equipment interrupting rating (1/2-cycle) fault currents on electrical distribution system diagram.

F. Equipment Evaluation Report:
1. For 600-V overcurrent protective devices, ensure that interrupting ratings are equal to or higher than calculated 1/2-cycle symmetrical fault current.
2. For devices and equipment rated for asymmetrical fault current, apply multiplication factors listed in the standards to 1/2-cycle symmetrical fault current.
3. Verify adequacy of phase conductors at maximum three-phase bolted fault currents; verify adequacy of equipment grounding conductors and grounding electrode conductors at maximum ground-fault currents. Ensure that short-circuit withstand ratings are equal to or higher than calculated 1/2-cycle symmetrical fault current.

3.4 COORDINATION STUDY

A. Perform coordination study using approved computer software program. Prepare a written report using results of fault-current study. Comply with IEEE 399.
1. Calculate the maximum and minimum 1/2-cycle short-circuit currents.
2. Calculate the maximum and minimum interrupting duty (5 cycles to 2 seconds) short-circuit currents.
3. Calculate the maximum and minimum ground-fault currents.

B. Comply with IEEE 141 and IEEE242 recommendations for fault currents and time intervals.

C. Transformer Primary Overcurrent Protective Devices:
1. Device shall not operate in response to the following:
   a. Inrush current when first energized.
   b. Self-cooled, full-load current.
2. Device settings shall protect transformers according to IEEE C57.12.00, for fault currents.

D. Conductor Protection: Protect cables against damage from fault currents according to ICEA P-32-382, ICEA P-45-482, and conductor melting curves in IEEE 242. Demonstrate that equipment withstands the maximum short-circuit current for a time equivalent to the tripping time of the primary relay protection or total clearing time of the fuse. To determine temperatures that damage insulation, use curves from cable manufacturers or from listed standards indicating conductor size and short-circuit current.

E. Coordination-Study Report: Prepare a written report indicating the following results of coordination study:
   1. Tabular Format of Settings Selected for Overcurrent Protective Devices:
      a. Device tag.
      b. Relay-current transformer ratios; and tap, time-dial, and instantaneous-pickup values.
      c. Circuit-breaker sensor rating; and long-time, short-time, and instantaneous settings.
      d. Fuse-current rating and type.
      e. Ground-fault relay-pickup and time-delay settings.
   2. Coordination Curves: Prepared to determine settings of overcurrent protective devices to achieve selective coordination. Graphically illustrate that adequate time separation exists between devices installed in series, including power utility company's upstream devices. Prepare separate sets of curves for the switching schemes and for emergency periods where the power source is local generation. Show the following information:
      a. Device tag.
      b. Voltage and current ratio for curves.
      c. Three-phase and single-phase damage points for each transformer.
      d. No damage, melting, and clearing curves for fuses.
      e. Cable damage curves.
      f. Transformer inrush points.
      g. Maximum fault-current cutoff point.

F. Completed data sheets for setting of overcurrent protective devices.

END OF SECTION 16055

THIS PAGE LEFT BLANK INTENTIONALLY

16060 - GROUNDING AND BONDING

PART 1 - GENERAL

1.1 RELATED DOCUMENTS

A. Drawings and general provisions of the Contract, including General and Supplementary Conditions and Division 1 Specification Sections, apply to this Section.

1.2 SUMMARY

A. This Section includes methods and materials for grounding systems and equipment, plus the following special applications:
   1. Overhead-lines grounding.
   2. Underground distribution grounding.
   3. Ground to grounding counterpoise.
   4. Grounding to piping.
   5. Grounding to rebar within slab / top of lift station.

1.3 SUBMITTALS

A. Product Data: For each type of product indicated.

B. Other Informational Submittals: Plans showing dimensioned as-built locations of grounding features specified in Part 3 "Field Quality Control" Article, including the following:
   1. Ground rods.
   2. Ground counterpoise.
   3. Grounding arrangements and connections for separately derived systems.
   4. Grounding for sensitive electronic equipment.

C. Qualification Data: For testing agency and testing agency's field supervisor.

D. Field quality-control test reports.

E. Operation and Maintenance Data: For grounding to include the following in operation and maintenance manuals:
   1. Instructions for periodic testing and inspection of grounding features at ground rings and grounding connections for separately derived systems based on NETA MTS and NFPA 70B.
      a. Tests shall be to determine if ground resistance or impedance values remain within specified maximums, and instructions shall recommend corrective action if they do not.
         b. Include recommended testing intervals.

1.4 QUALITY ASSURANCE

A. Testing Agency Qualifications: An independent agency, with the experience and capability to conduct the testing indicated, that is a member company of the InterNational Electrical Testing Association or is a nationally recognized testing laboratory (NRTL) as defined by OSHA in 29 CFR 1910.7, and that is acceptable to authorities having jurisdiction.
   1. Testing Agency's Field Supervisor: Person currently certified by the InterNational Electrical Testing Association to supervise on-site testing specified in Part 3.

B. Electrical Components, Devices, and Accessories: Listed and labeled as defined in NFPA 70, Article 100, by a testing agency acceptable to authorities having jurisdiction, and marked for intended use.

C. Comply with UL 467 for grounding and bonding materials and equipment.

PART 2 - PRODUCTS

2.1 CONDUCTORS

A. Insulated Conductors: Copper wire or cable insulated for 600 V unless otherwise required by applicable Code or authorities having jurisdiction.

B. Bare Copper Conductors:
   1. Solid Conductors: ASTM B 3.
   2. Stranded Conductors: ASTM B 8.
   3. Tinned Conductors: ASTM B 33.
   4. Bonding Cable: 28 kcmil, 14 strands of No. 17 AWG conductor, 1/4 inch in diameter.
   5. Bonding Conductor: No. 4 or No. 6 AWG, stranded conductor.
   6. Bonding Jumper: Copper tape, braided conductors, terminated with copper ferrules; 1-5/8 inches wide and 1/16 inch thick.

C. Bare Grounding Conductor and Conductor Protector for Wood Poles:
   1. No. 4 AWG minimum, soft-drawn copper.
   2. Conductor Protector: Half-round PVC or wood molding. If wood, use pressure-treated fir or cypress or cedar.

2.2 CONNECTORS

A. Listed and labeled by a nationally recognized testing laboratory acceptable to authorities having jurisdiction for applications in which used, and for specific types, sizes, and combinations of conductors and other items connected.

B. Bolted Connectors for Conductors and Pipes: Copper or copper alloy, bolted pressure-type, with at least two bolts.
   1. Pipe Connectors: Clamp type, sized for pipe.

C. Welded Connectors: Exothermic-welding kits of types recommended by kit manufacturer for materials being joined and installation conditions.

2.3 GROUNDING ELECTRODES

A. Ground Rods: Copper-clad; 3/4 inch in diameter by 10 feet in diameter.

PART 3 - EXECUTION

3.1 APPLICATIONS

A. Conductors: Install solid conductor for overhead would poles, and stranded conductors for all other conductors, unless otherwise indicated.

B. Underground Grounding Conductors: Install bare copper conductor, No. 2/0 AWG minimum.
   1. Bury at least 24 inches below grade.

C. Conductor Terminations and Connections:
   1. Pipe and Equipment Grounding Conductor Terminations: Bolted connectors.
   2. Underground Connections: Welded connectors, except as otherwise indicated.
   3. Connections to Structural Steel: Welded connectors.

3.2 GROUNDING OVERHEAD LINES

A. Comply with IEEE C2 grounding requirements.

B. Install 2 parallel ground rods if resistance to ground by a single, ground-rod electrode exceeds 25 ohms.

C. Drive ground rods until tops are 12 inches below finished grade in undisturbed earth.

D. Ground-Rod Connections: Install welded connectors for underground connections and connections to rods.

3.3 GROUNDING UNDERGROUND DISTRIBUTION SYSTEM COMPONENTS

A. Comply with IEEE C2 grounding requirements.

B. Retain and edit paragraph below to exceed NFPA 70 requirements. If concrete pad is for equipment to be supplied by utility company, revise to comply with utility company's grounding standards or delete and detail on Drawings.

C. Pad-Mounted Transformers: Concrete pad for equipment to be supplied by utility company; grounding shall comply with utility company's grounding standards

3.4 EQUIPMENT GROUNDING

A. Install insulated equipment grounding conductors with all feeders and branch circuits.

B. Metal Poles Supporting Outdoor Lighting Fixtures: Install grounding electrode and a separate insulated equipment grounding conductor in addition to grounding conductor installed with branch-circuit conductors.

3.5 INSTALLATION

A. Grounding Conductors: Route along shortest and straightest paths possible, unless otherwise indicated or required by Code. Avoid obstructing access or placing conductors where they may be subjected to strain, impact, or damage.

B. Ground Rods: Drive rods until tops are 2 inches below final grade, unless otherwise indicated.
   1. Interconnect ground rods with grounding electrode conductor below grade and as otherwise indicated. Make connections without exposing rod or damaging rod coating.
   2. For grounding electrode counterpoise system, install three rods spaced at least one-rod length from each other and located at least the same distance from other grounding electrodes, and connect to the service grounding electrode conductor.

C. Bonding Straps and Jumpers: Install in locations accessible for inspection and maintenance, except where routed through short lengths of conduit.
   1. Bonding to Structure: Bond straps directly to basic structure, taking care not to penetrate any adjacent parts.
   2. Use exothermic-welded connectors for outdoor locations, but if a disconnect-type connection is required, use a bolted clamp.

D. Grounding and Bonding for Piping:
   1. Metal Water Service Pipe: Install insulated copper grounding conductors, in conduit, from service equipment to main metal water service into lift station. Connect grounding conductors to main metal water service pipes, using a bolted clamp connector or by bolting a lug-type connector to a pipe flange, using one of the lug bolts of the flange. Where a dielectric main water fitting is installed, connect grounding conductor on street side of fitting. Bond metal grounding conductor conduit or sleeve to conductor at each end.

2. Bond each aboveground portion of gas piping system downstream from equipment shutoff valve.

E. Grounding for Top of Lift Station: Install a driven ground rod at base at distances not more than 60 feet apart, as measured around perimeter. Provide a minimum of 1 for each separated slab.

F. Grounding for Slabs - Ufer Ground (Concrete-Encased Grounding Electrode): Fabricate according to NFPA 70, using a minimum of 20 feet of bare copper conductor not smaller than No. 4 AWG.
   1. If concrete foundation is less than 20 feet long, coil excess conductor within base of foundation.
   2. Bond grounding conductor to reinforcing steel in at least four locations and to anchor bolts. Extend grounding conductor below grade and connect to building grounding grid or to grounding electrode external to concrete.

3.6 FIELD QUALITY CONTROL

A. Testing Agency: Engage a qualified testing and inspecting agency to perform the following field tests and inspections and prepare test reports:

B. Perform the following tests and inspections and prepare test reports:
   1. After installing grounding system but before permanent electrical circuits have been energized, test for compliance with requirements.
   2. Test completed grounding system at each location where a maximum ground-resistance level is specified, at service disconnect enclosure grounding terminal and at individual ground rods. Make tests at ground rods before any conductors are connected.
      a. Measure ground resistance not less than two full days after last trace of precipitation and without soil being moistened by any means other than natural drainage or seepage and without chemical treatment or other artificial means of reducing natural ground resistance.
      b. Perform tests by fall-of-potential method according to IEEE 81.
   3. Prepare dimensioned drawings locating each test well, ground rod and ground rod assembly, and other grounding electrodes. Identify each by letter in alphabetical order, and key to the record of tests and observations. Include the number of rods driven and their depth at each location, and include observations of weather and other phenomena that may affect test results. Describe measures taken to improve test results.

C. Report measured ground resistances that exceed the following values:
   1. Control Panel: 3 ohm(s).
   2. Pad-Mounted Equipment: 5 ohms.

D. Excessive Ground Resistance: If resistance to ground exceeds specified values, notify Engineer promptly and include recommendations to reduce ground resistance.

END OF SECTION 16060

SECTION 16073 - HANGERS AND SUPPORTS FOR ELECTRICAL SYSTEMS

PART 1 - GENERAL

1.1 RELATED DOCUMENTS

A. Drawings and general provisions of the Contract, including General and Supplementary Conditions and Division 1 Specification Sections, apply to this Section.

1.2 SUMMARY

A. This Section includes the following:
   1. Hangers and supports for electrical equipment and systems.
   2. Construction requirements for concrete bases.

1.3 DEFINITIONS

A. RMC: Rigid metal conduit.

B. RNC: Rigid Non-metal conduit.

1.4 PERFORMANCE REQUIREMENTS

A. Design equipment supports capable of supporting combined operating weight of supported equipment and connected systems and components.

B. Rated Strength: Adequate in tension, shear, and pullout force to resist maximum loads calculated or imposed for this Project, with a minimum structural safety factor of five times the applied force.

1.5 SUBMITTALS

A. Product Data: For the following:
   1. Equipment support systems.

B. Shop Drawings: Show fabrication and installation details and include calculations for the following:
   1. Equipment supports.

C. Welding certificates.

1.6 QUALITY ASSURANCE

A. Welding: Qualify procedures and personnel according to AWS D1.1/D1.1M, "Structural Welding Code - Steel."

B. Comply with NFPA 70.

1.7 COORDINATION

A. Coordinate size and location of concrete bases. Cast anchor-bolt inserts into bases. Concrete, reinforcement, and formwork requirements are specified in Division 3.

B. Coordinate installation of equipment supports. These items are specified in Division 7 Section "Roof Accessories."

PART 2 - PRODUCTS

2.1 SUPPORT, ANCHORAGE, AND ATTACHMENT COMPONENTS

A. Raceway and Cable Supports: As described in NECA 1 and NECA 101.

B. Conduit and Cable Support Devices: Stainless Steel hangers, clamps, and associated fittings, designed for types and sizes of raceway or cable to be supported.

C. Mounting, Anchoring, and Attachment Components: Items for fastening electrical items or their supports to slab surfaces include the following:
   1. Mechanical-Expansion Anchors: Insert-wedge-type, stainless steel, for use in hardened portland cement concrete with tension, shear, and pullout capacities appropriate for supported loads and building materials in which used.
      a. Manufacturers: Subject to compliance with requirements, provide products by one of the following:
         1) Cooper B-Line, Inc.; a division of Cooper Industries.
         2) Empire Tool and Manufacturing Co., Inc.
         3) Hilti Inc.
         4) ITW Ramset/Red Head; a division of Illinois Tool Works, Inc.
         5) MKT Fastening, LLC.

PART 3 - EXECUTION

3.1 SUPPORT INSTALLATION

A. Comply with NECA 1 and NECA 101 for installation requirements except as specified in this Article.

B. Strength of Support Assemblies: Where not indicated, select sizes of components so strength will be adequate to carry present and future static loads within specified loading limits. Minimum static design load used for strength determination shall be weight of supported components plus 200 lb.

C. Mounting and Anchorage of Surface-Mounted Equipment and Components: Anchor and fasten electrical items and their supports to rack structural elements by the following methods unless otherwise indicated by code:
   1. To Steel: Welded threaded studs complying with AWS D1.1/D1.1M, with lock washers and nuts.
   2. To Light Steel: Sheet metal screws.

D. Drill holes for expansion anchors in concrete at locations and to depths that avoid reinforcing bars.

3.2 INSTALLATION OF FABRICATED METAL SUPPORTS

A. Comply with installation requirements in Division 5 Section "Metal Fabrications" for site-fabricated metal supports.

B. Cut, fit, and place miscellaneous metal supports accurately in location, alignment, and elevation to support and anchor electrical materials and equipment.

C. Field Welding: Comply with AWS D1.1/D1.1M.

3.3 CONCRETE BASES

A. Construct concrete bases of dimensions indicated but not less than 4 inches larger in both directions than supported unit, and so anchors will be a minimum of 10 bolt diameters from edge of the base.

B. Use 3000-psi, 28-day compressive-strength concrete. Concrete materials, reinforcement, and placement requirements are specified in Division 3 Section "Cast-in-Place Concrete."

C. Anchor equipment to concrete base.
   1. Place and secure anchorage devices. Use supported equipment manufacturer's setting drawings, templates, diagrams, instructions, and directions furnished with items to be embedded.
   2. Install anchor bolts to elevations required for proper attachment to supported equipment.
   3. Install anchor bolts according to anchor-bolt manufacturer's written instructions.

3.4 PAINTING

A. Touchup: Clean field welds and abraded areas of shop paint. Paint exposed areas immediately after erecting hangers and supports. Use same materials as used for shop painting. Comply with SSPC-PA 1 requirements for touching up field-painted surfaces.
   1. Apply paint by brush or spray to provide minimum dry film thickness of 2.0 mils.

END OF SECTION 16073

16075 - ELECTRICAL IDENTIFICATION

PART 1 - GENERAL

1.1 RELATED DOCUMENTS

A. Drawings and general provisions of the Contract, including General and Supplementary Conditions and Division 1 Specification Sections, apply to this Section.

1.2 SUMMARY

A. This Section includes the following:
   1. Identification for raceway.
   2. Identification for conductors and communication and control cable.
   3. Underground-line warning tape.
   4. Warning labels and signs.
   5. Instruction signs.
   6. Equipment identification labels.
   7. Miscellaneous identification products.

1.3 SUBMITTALS

A. Product Data: For each electrical identification product indicated.

B. Identification Schedule: An index of nomenclature of electrical equipment and system components used in identification signs and labels.

C. Samples: For each type of label and sign to illustrate size, colors, lettering style, mounting provisions, and graphic features of identification products.

1.4 QUALITY ASSURANCE

A. Comply with ANSI A13.1 and ANSI C2.

B. Comply with NFPA 70.

C. Comply with 29 CFR 1910.145.

1.5 COORDINATION

A. Coordinate identification names, abbreviations, colors, and other features with requirements in the Contract Documents, Shop Drawings, manufacturer's wiring

diagrams, and the Operation and Maintenance Manual, and with those required by codes, standards, and 29 CFR 1910.145. Use consistent designations throughout Project.

B. Coordinate installation of identifying devices with completion of covering and painting of surfaces where devices are to be applied.

C. Coordinate installation of identifying devices with location of access panels and doors.

PART 2 - PRODUCTS

2.1 RACEWAY CABLE IDENTIFICATION MATERIALS

A. Comply with ANSI A13.1 for minimum size of letters for legend and for minimum length of color field for each raceway and cable size.

B. Color for Printed Legend:
   1. Power Circuits: Black letters on an orange field.
   2. Legend: Indicate system or service and voltage, if applicable.

C. Self-Adhesive Vinyl Tape: Colored, heavy duty, waterproof, fade resistant; 2 inches wide; compounded for outdoor use.

2.2 CONDUCTOR AND COMMUNICATION- AND CONTROL-CABLE IDENTIFICATION MATERIALS

A. Color-Coding Conductor Tape: Colored, self-adhesive vinyl tape not less than 3 mils thick by 1 to 2 inches wide.

B. Marker Tapes: Vinyl or vinyl-cloth, self-adhesive wraparound type, with circuit identification legend machine printed by thermal transfer or equivalent process.

2.3 UNDERGROUND-LINE WARNING TAPE

A. Description: Permanent, bright-colored, continuous-printed, polyethylene tape.
   1. Not less than 6 inches wide by 4 mils thick.
   2. Compounded for permanent direct-burial service.
   3. Embedded continuous metallic strip or core.
   4. Printed legend shall indicate type of underground line.

2.4 WARNING LABELS AND SIGNS

A. Comply with NFPA 70 and 29 CFR 1910.145.

B. Self-Adhesive Warning Labels: Factory printed, multicolor, pressure-sensitive adhesive labels, configured for display on front cover, door, or other access to equipment, unless otherwise indicated.

C. Warning label and sign shall include, but are not limited to, the following legends:
   1. Multiple Power Source Warning: "DANGER - ELECTRICAL SHOCK HAZARD – WEAR PRTOECTIVE GEAR PRIOR TO OPENING PANEL DOOR."

2.5 INSTRUCTION SIGNS

A. Engraved, laminated acrylic or melamine plastic, minimum 1/16 inch thick for signs up to 20 sq. in. and 1/8 inch thick for larger sizes.
   1. Engraved legend with black letters on white face.
   2. Punched or drilled for mechanical fasteners.
   3. Framed with mitered acrylic molding and arranged for attachment at applicable equipment.

2.6 EQUIPMENT IDENTIFICATION LABELS

A. Engraved, Laminated Acrylic or Melamine Label: Punched or drilled for screw mounting. White letters on a dark-gray background. Minimum letter height shall be 3/8 inch.

2.7 MISCELLANEOUS IDENTIFICATION PRODUCTS

A. Cable Ties: Fungus-inert, self-extinguishing, 1-piece, self-locking, Type 6/6 nylon cable ties.
   1. Minimum Width: 3/16 inch.
   2. Tensile Strength: 50 lb, minimum.
   3. Temperature Range: Minus 40 to plus 185 deg F.
   4. Color: Black, except where used for color-coding.

B. Paint: Paint materials and application requirements are specified in Division 9 painting Sections.
   1. Exterior Ferrous Metal:
      a. Semigloss Alkyd-Enamel Finish: Two finish coat(s) over a primer.
         1) Primer: Exterior ferrous-metal primer.
         2) Finish Coats: Exterior semigloss alkyd enamel.

C. Fasteners for Labels and Signs: Self-tapping, stainless-steel screws or stainless-steel machine screws with nuts and flat and lock washers.

PART 3 - EXECUTION

3.1 APPLICATION

A. Accessible Raceways, 600 V or Less, for Service, Feeder, and Branch Circuits More Than 30A: Identify with weatherproof, orange self-adhesive vinyl label rated for exterior use.

B. Accessible Raceways and Cables of Auxiliary Systems: Identify the following systems with color-coded, weatherproof, self-adhesive vinyl label rated for exterior use:
   1. Electrical Supervisory System: Green and blue.
   2. Control Wiring: Green and red.

C. Power-Circuit Conductor Identification: For secondary conductors No. 1/0 AWG and larger in pull and junction boxes, and handholes use color-coding conductor tape. Identify source and circuit number of each set of conductors. For single conductor cables, identify phase in addition to the above.

D. Branch-Circuit Conductor Identification: Where there are conductors for more than two branch circuits in the same junction or pull box, use. Identify each ungrounded conductor according to source and circuit number.

E. Auxiliary Electrical Systems Conductor Identification: Identify field-installed alarms, control, signal, and data connections.
   1. Identify conductors, cables, and terminals in enclosures and at junctions, terminals, and pull points. Identify by system and circuit designation.
   2. Use system of marker tape designations that is uniform and consistent with system used by manufacturer for factory-installed connections.
   3. Coordinate identification with Project Drawings, manufacturer's wiring diagrams, and Operation and Maintenance Manual.

F. Locations of Underground Lines: Identify with underground-line warning tape for power, lighting, and control wiring. Install underground-line warning tape for both direct-buried cables and cables in raceway.

G. Instruction Signs:
   1. Operating Instructions: Install instruction signs to facilitate proper operation and maintenance of electrical systems and items to which they connect. Install instruction signs with approved legend where instructions are needed for system or equipment operation.
   2. Emergency Operating Instructions: Install instruction signs with white legend on a red background with minimum 3/8-inch- high letters for emergency instructions at equipment used for power transfer.

H. Equipment Identification Labels: On each unit of equipment, install unique designation label that is consistent with wiring diagrams, schedules, and Operation and Maintenance

Manual. Apply labels to disconnect switches and protection equipment and control panels.

1. Labeling Instructions:
   a. Outdoor Equipment: Engraved, laminated acrylic or melamine label.
   b. Elevated Components: Increase sizes of labels and letters to those appropriate for viewing from the floor.
2. Equipment to Be Labeled:
   a. Control panel sections with access doors.
   b. Disconnect switches.
   c. Motor starters.
   d. Push-button stations.
   e. Power transfer equipment.
   f. Contactors.
   g. Power-generating units.
   h. Monitoring and control equipment.
   i. Uninterruptible power supply equipment.
   j. Terminals for signal and control functions.
   k. Miscellanies equipment and devices located within control panel.

3.2 INSTALLATION

A. Verify identity of each item before installing identification products.

B. Location: Install identification materials and devices at locations for most convenient viewing without interference with operation and maintenance of equipment.

C. Apply identification devices to surfaces that require finish after completing finish work.

D. Self-Adhesive Identification Products: Clean surfaces before application, using materials and methods recommended by manufacturer of identification device.

E. Attach nonadhesive signs and plastic labels with screws and auxiliary hardware appropriate to the location and substrate.

F. System Identification Color Banding for Raceways and Cables: Each color band shall completely encircle cable or conduit. Place adjacent bands of two-color markings in contact, side by side.

G. Color-Coding for Phase and Voltage Level Identification, 600 V and Less: Use the colors listed below for ungrounded conductors.
   1. Color shall be factory applied or, for sizes larger than No. 10 AWG if authorities having jurisdiction permit, field applied.
   2. Colors for 240-208/120-V Circuits:
      a. Phase A: Black.
      b. Phase B: Red (Orange for 240V Stinger Leg).
      c. Phase C: Blue.
   3. Colors for 480/277-V Circuits:

a. Phase A: Brown.
b. Phase B: Orange.
c. Phase C: Yellow.

4. Field-Applied, Color-Coding Conductor Tape: Apply in half-lapped turns for a minimum distance of 6 inches from terminal points and in boxes where splices or taps are made, and for a minimum width of 2 inches. Apply last two turns of tape with no tension to prevent possible unwinding. Locate bands to avoid obscuring factory cable markings.

H. Underground-Line Warning Tape: During backfilling of trenches install continuous underground-line warning tape directly above line at 6 to 8 inches below finished grade. Use multiple tapes where width of multiple lines installed in a common trench exceeds 16 inches overall.

I. Painted Identification: Prepare surface and apply paint according to Division 9 painting Sections.

END OF SECTION 16075

16120 - CONDUCTORS AND CABLES

PART 1 - GENERAL

1.1 RELATED DOCUMENTS

A. Drawings and general provisions of the Contract, including General and Supplementary Conditions and Division 1 Specification Sections, apply to this Section.

1.2 SUMMARY

A. This Section includes the following:
   1. Wires and cables rated 600 V and less.
   2. Connectors and terminations rated 600 V and less.

B. Restrictions:
   1. All wire/cable runs of any type must be continuous. Splices are expressly prohibited.

1.3 DEFINITIONS

A. NBR: Acrylonitrile-butadiene rubber.

B. FVR: Full-Voltage Starter.

C. RVSS: Reduced-Voltage Soft Starter.

D. TSP: Twisted Shielded Pair

E. VFD: Variable Frequency Drive.

1.4 SUBMITTALS

A. Product Data: For each type of product indicated.

1.5 QUALITY ASSURANCE

A. Electrical Components, Devices, and Accessories: Listed and labeled as defined in NFPA 70, Article 100, by a testing agency acceptable to authorities having jurisdiction, and marked for intended use.

B. Comply with NFPA 70.

PART 2 - PRODUCTS

2.1 CONDUCTORS AND CABLES

A. Manufacturers: Subject to compliance with requirements, provide products by one of the following:
   1. Alcan Products Corporation; Alcan Cable Division.
   2. American Insulated Wire Corp.; a Leviton Company.
   3. General Cable Corporation.
   4. Senator Wire & Cable Company.
   5. Southwire Company.
   6. The Okonite Company.

B. All conductors shall be stranded. No solid conductors shall be allowed.

C. Copper Conductors: Comply with NEMA WC 70.

D. Conductor Insulation: Comply with NEMA WC 70 for Types THHN-2/THWN-2.

E. Multi-conductor Cable: Comply with NEMA WC 70 for Types SOOW.

F. Instrumentation Cable: Comply with NEMA WC 70 for TSP.

2.2 CONNECTORS

A. Manufacturers: Subject to compliance with requirements, provide products by one of the following:
   1. AFC Cable Systems, Inc.
   2. Hubbell Power Systems, Inc.
   3. O-Z/Gedney; EGS Electrical Group LLC.
   4. 3M; Electrical Products Division.
   5. Tyco Electronics Corp.

B. Description: Factory-fabricated connectors of size, ampacity rating, material, type, and class for application and service indicated.

PART 3 - EXECUTION

3.1 CONDUCTOR MATERIAL APPLICATIONS

A. Feeders: Copper.

B. Branch Circuits: Copper.

3.2 CONDUCTOR INSULATION AND MULTICONDUCTOR CABLE APPLICATIONS AND WIRING METHODS

A. Service Entrance: Type THHN-2/THWN-2, single conductors in raceway.

B. Feeders Concealed in Concrete, below Slabs-on-Grade, and Underground (not into wet well): Type THHN-2/THWN-2, single conductors in raceway.

C. Branch Circuits, into Wet Well: Type SOOW, multi-conductor hard service cord.
   1. Shall be supported by means of a stainless steel, wire mesh, strain relief device located in an assesible location from the wet well access door.
   2. Be routed with wet well to not cause damage to cord during operation or removal of serving mechanical equipment or control device for maintenance purposes.
   3. Be connected to serving mechanical equipment or control device in such manner as to be rated for a Class I, Division I rated assembly.

D. Class 1 & 2 Control Circuits: Type THHN-2/THWN-2, in raceway or Type SOOW as applicable.

E. Analog Instrumentation Circuits: Type TSP, in raceway.

3.3 INSTALLATION OF CONDUCTORS AND CABLES

A. Use manufacturer-approved pulling compound or lubricant where necessary; compound used must not deteriorate conductor or insulation. Do not exceed manufacturer's recommended maximum pulling tensions and sidewall pressure values.

B. Use pulling means, including fish tape, cable, rope, and basket-weave wire/cable grips, that will not damage cables or raceway.

C. Identify and color-code conductors and cables according to Division 16 Section "Electrical Identification."

3.4 CONNECTIONS

A. Tighten electrical connectors and terminals according to manufacturer's published torque-tightening values. If manufacturer's torque values are not indicated, use those specified in UL 486A and UL 486B.

END OF SECTION 16120

THIS PAGE LEFT BLANK INTENTIONALLY

SECTION 16130 - RACEWAYS AND BOXES

PART 1 - GENERAL

1.1 RELATED DOCUMENTS

A. Drawings and general provisions of the Contract, including General and Supplementary Conditions and Division 1 Specification Sections, apply to this Section.

1.2 SUMMARY

A. This Section includes raceways, fittings, boxes, enclosures, accessories for direct buried duct, and cabinets for electrical wiring.

1.3 DEFINITIONS

A. EPDM: Ethylene-propylene-diene terpolymer rubber.

B. LFNC: Liquidtight flexible non-metallic conduit.

C. NBR: Acrylonitrile-butadiene rubber.

D. RMC: Rigid metal conduit.

E. RNC: Rigid nonmetallic conduit.

1.4 SUBMITTALS

A. Product Data: For raceways, wireways and fittings, hinged-cover enclosures, and cabinets.

B. Shop Drawings: For the following raceway components. Include plans, elevations, sections, details, and attachments to other work.
   1. Custom enclosures and cabinets.
   2. For handholes and boxes for underground wiring, including the following:
      a. Duct entry provisions, including locations and duct sizes.
      b. Frame and cover design.
      c. Grounding details.
      d. Joint details.
      e. Bell ends.
      f. Bends.
      g. Fittings.
      h. Solvent cement.

1.5 QUALITY ASSURANCE

A. Electrical Components, Devices, and Accessories: Listed and labeled as defined in NFPA 70, Article 100, by a testing agency acceptable to authorities having jurisdiction, and marked for intended use.

B. Comply with NFPA 70.

1.6 DELIVERY, STORAGE, AND HANDLING

A. Deliver ducts to Project site with ends capped. Store nonmetallic ducts with supports to prevent bending, warping, and deforming.

1.7 COORDINATION

A. Coordinate layout and installation of ducts and handholes with final arrangement of other utilities, site grading, and surface features as determined in the field.

B. Coordinate elevations of ducts entrances into handholes with final locations and profiles of ducts as determined by coordination with other utilities, underground obstructions, and surface features. Revise locations and elevations from those indicated as required to suit field conditions and to ensure that duct runs drain to handholes.

PART 2 - PRODUCTS

2.1 METAL CONDUIT

A. Manufacturers: Subject to compliance with requirements, provide products by one of the following:
   1. AFC Cable Systems, Inc.
   2. Alflex Inc.
   3. Allied Tube & Conduit; a Tyco International Ltd. Co.
   4. Anamet Electrical, Inc.; Anaconda Metal Hose.
   5. Electri-Flex Co.
   6. Manhattan/CDT/Cole-Flex.
   7. Maverick Tube Corporation.
   8. O-Z Gedney; a unit of General Signal.
   9. Wheatland Tube Company.

B. Aluminum Rigid Conduit: ANSI C80.5.

C. IMC: ANSI C80.6.

D. Fittings for Conduit (Including all Types and Flexible and Liquidtight) and Cable: NEMA FB 1; listed for type and size raceway with which used, and for application and environment in which installed.
   1. Conduit Fittings for Hazardous (Classified) Locations: Comply with UL 886.
   2. Coating for Fittings for PVC-Coated Conduit: Minimum thickness, 0.100 inch, with overlapping sleeves protecting threaded joints.

E. Joint Compound for Rigid Aluminum Conduit: Listed for use in cable connector assemblies, and compounded for use to lubricate and protect threaded raceway joints from corrosion and enhance their conductivity.

2.2 NONMETALLIC CONDUIT

A. Manufacturers: Subject to compliance with requirements, provide products by one of the following:
   1. AFC Cable Systems, Inc.
   2. Anamet Electrical, Inc.; Anaconda Metal Hose.
   3. Arnco Corporation.
   4. CANTEX Inc.
   5. CertainTeed Corp.; Pipe & Plastics Group.
   6. Condux International, Inc.
   7. ElecSYS, Inc.
   8. Electri-Flex Co.
   9. Lamson & Sessions; Carlon Electrical Products.
   10. Manhattan/CDT/Cole-Flex.
   11. RACO; a Hubbell Company.
   12. Thomas & Betts Corporation.

B. RNC: NEMA TC 2, Type EPC-80-PVC, UL 651, unless otherwise indicated.

C. Fittings for RNC: NEMA TC 3 and UL 514B; match to conduit or tubing type and material.

D. LFNC: Flexible PVC core with PCV jacket, smooth inner surface with integral reinforcement within the conduit wall.

2.3 CUSTOM-BUILT METAL WIREWAYS

A. Description: Custom-built stainless steel framing with open ventilated stainless steel mesh sides. Mesh sides shall consist of individual framing, and bolted on with stainless steel (316L) bolts for removable access panels to cable within wireway.

B. Fittings and Accessories: Include stainless steel (316L) couplings, adapters, hold-down straps, strain relief, and other fittings to match and mate with wireways as required for complete system.

C. Wireway Covers: Bolt-on type, unless otherwise indicated.

D. Refer to Drawings for additional requirements.

2.4 HANDHOLES FOR EXTERIOR UNDERGROUND WIRING

A. Polymer-Concrete Handholes: Molded of sand and aggregate, bound together with polymer resin, and reinforced with steel or fiberglass or a combination of the two.
   1. Available Manufacturers: Subject to compliance with requirements, manufacturers offering products that may be incorporated into the Work include, but are not limited to, the following:
      a. Hubble Power Systems, Quazite
      b. Armorcast Products Company
      c. Carson Industries LLC
      d. CDR Systems Corporation

   2. Basis-of-Design Product: Subject to compliance with requirements, provide the product size indicated on Drawings.

PART 3 - EXECUTION

3.1 RACEWAY APPLICATION

A. Outdoors: Apply raceway products as specified below, unless otherwise indicated:

   1. Exposed Conduit:
      a. Wet well to control panel: Rigid aluminum conduit
      b. Circuit not entering into wet well: RNC, Type EPC-80-PVC, unless noted otherwise on the drawings.
   2. Underground Conduit:
      a. Wet well to control panel: Rigid aluminum conduit
      b. Circuit not entering into wet well: RNC, Type EPC-80-PVC direct buried, unless noted otherwise on the drawings.
   3. Connection to Vibrating Equipment (Including Transformers, HVAC units): LFNC.
   4. Boxes and Enclosures, Aboveground: NEMA 250, Type 4X stainless steel (316L).
   5. Application of Handholes and Boxes for Underground Wiring:
      a. Handholes and Pull Boxes in Driveway, Parking Lot, and Off-Roadway Locations, Subject to Occasional, Nondeliberate Loading by Heavy Vehicles: Polymer concrete, SCTE 77, Tier 15 structural load rating.

B. Minimum Raceway Size: 1-inch trade size.

C. Raceway Fittings: Compatible with raceways and suitable for use and location.

1. Rigid Aluminum Conduit: Use threaded rigid aluminum conduit fittings, unless otherwise indicated.

D. Aluminum conduits in contact with concrete or earth shall be wrapped with 2 wraps of anti-corrosion tape, suited for use of protecting metal from corrosion. Tape shall be half-wrapped in one direction, and then back in the opposite direction for a total of 2 half wraps.

3.2 INSTALLATION

A. Comply with NECA 1 for installation requirements applicable to products specified in Part 2 except where requirements on Drawings or in this Article are stricter.

B. Complete raceway installation before starting conductor installation.

C. Support raceways as specified in Division 16 Section "Hangers and Supports."

D. Arrange stub-ups so curved portions of bends are not visible above the finished slab.

E. Install no more than the equivalent of three 90-degree bends in any conduit run.

F. Raceways Embedded in Slabs:
   1. Run conduit larger than 1-inch trade size, parallel or at right angles to main reinforcement. Where at right angles to reinforcement, place conduit close to slab support.

G. Threaded Conduit Joints, Exposed to Wet, Damp, Corrosive, or Outdoor Conditions: Apply listed compound to threads of raceway and fittings before making up joints. Follow compound manufacturer's written instructions.

H. Raceway Terminations at Locations Subject to Moisture or Vibration: Use insulating bushings to protect conductors, including conductors smaller than No. 4 AWG.

I. Flexible Conduit Connections: Use maximum of 36 inches of flexible conduit for equipment subject to vibration, noise transmission, or movement; and for transformers.
   1. Use LFNC in damp or wet locations.

3.3 INSTALLATION OF UNDERGROUND CONDUIT

A. Direct-Buried Conduit:
   1. Excavate trench bottom to provide firm and uniform support for conduit. Prepare trench bottom as specified in Division 2 Section "Earthwork" for pipe less than 6 inches in nominal diameter.
   2. Install backfill as specified in Division 2 Section "Earthwork."
   3. After installing conduit, backfill and compact. Start at tie-in point, and work toward end of conduit run, leaving conduit at end of run free to move with

expansion and contraction as temperature changes during this process. Firmly hand tamp backfill around conduit to provide maximum supporting strength. After placing controlled backfill to within 12 inches of finished grade, make final conduit connection at end of run and complete backfilling with normal compaction as specified in Division 2 Section "Earthwork."

4. Restore surface features at areas disturbed by excavation and reestablish original grades, unless otherwise indicated. Replace removed sod immediately after backfilling is completed.
5. Install manufactured duct elbows for stub-ups at poles and equipment, unless otherwise indicated.
6. Install manufactured rigid aluminum conduit elbows for stub-ups at poles and equipment.
   a. Couple aluminum conduits to ducts with adapters designed for this purpose.
7. Warning Tape: Bury warning tape approximately 12 inches above direct-buried conduits.

B. Slope: Pitch ducts a minimum slope of 1:300 down toward handholes or wet well and away from equipment. Slope ducts from a high point in runs between two handholes to drain in both directions.

C. Curves and Bends: Use 5-degree angle couplings for small changes in direction. Use manufactured long sweep bends with a minimum radius of 48 inches, both horizontally and vertically, at other locations, unless otherwise indicated.

D. Duct Entrances to Polymer Concrete Handholes: Use end bells, spaced approximately 10 inches o.c. for 5-inch ducts, and vary proportionately for other duct sizes.
   1. Begin change from regular spacing to end-bell spacing 10 feet from the end bell without reducing duct line slope and without forming a trap in the line.
   2. Grout end bells into structure walls from both sides to provide watertight entrances.

E. Clean prior to pulling conductors or cables:
   1. Pull leather-washer-type duct cleaner, with graduated washer sizes, through full length of ducts. Follow with rubber duct swab for final cleaning and to assist in spreading lubricant throughout ducts.

3.4 INSTALLATION OF UNDERGROUND HANDHOLES

A. Install handholes level and plumb and with orientation and depth coordinated with connecting conduits to minimize bends and deflections required for proper entrances.

B. Unless otherwise indicated, support units on a level bed of crushed stone or gravel, graded from 1/2-inch sieve to No. 4 sieve and compacted to same density as adjacent undisturbed earth.

C. Field-cut openings for conduits according to enclosure manufacturer's written instructions. Cut wall of enclosure with a tool designed for material to be cut. Size

holes for terminating fittings to be used, and seal around penetrations after fittings are installed.

3.5 GROUNDING

A. Ground underground ducts and utility structures according to Division 16 and NFPA 70.

3.6 PROTECTION

A. Provide final protection and maintain conditions that ensure coatings, finishes, and cabinets are without damage or deterioration at time of Substantial Completion.
   1. Repair damage to stainless steel finishes in accordance with manufacturer recommendations.
   2. Repair damage to PVC finishes with matching touchup coating recommended by manufacturer.

END OF SECTION 16130

THIS PAGE LEFT BLANK INTENTIONALLY

SECTION 16211 - ELECTRICITY METERING

PART 1 - GENERAL

1.1 RELATED DOCUMENTS

A. Drawings and general provisions of the Contract, including General and Supplementary Conditions and Division 1 Specification Sections, apply to this Section.

1.2 SUMMARY

A. This Section includes equipment for utility company's electricity metering.

1.3 SUBMITTALS

A. Product Data: Include construction details, material descriptions, dimensions of individual components and profiles, and finishes. Describe electrical characteristics, features, and operating sequences. Include the following:
   1. Electricity-metering equipment.

B. Shop Drawings for Electricity-Metering Equipment:
   1. Dimensioned plans and sections or elevation layouts.
   2. Wiring Diagrams: Power, signal, and control wiring specific to this Project. Identify terminals and wiring designations and color codes to facilitate installation, operation, and maintenance. Indicate recommended types, wire sizes, and circuiting arrangements for field-installed wiring, and show circuit protection features.
   3. Mounting and anchoring devices recommended by manufacturer.

C. Operation and Maintenance Data: For electricity-metering equipment to include in operation and maintenance manuals.

1.4 QUALITY ASSURANCE

A. Electrical Components, Devices, and Accessories: Listed and labeled as defined in NFPA 70, Article 100, by a testing agency acceptable to authorities having jurisdiction, and marked for intended use.

1.5 COORDINATION

A. Electrical Service Connections: Coordinate with utility companies and components they furnish as follows:

1. Comply with requirements of utilities providing electrical power services.
2. Coordinate installation and connection of utilities and services, including provision for electricity-metering components.

PART 2 - PRODUCTS

2.1 MANUFACTURERS

A. In other Part 2 articles where titles below introduce lists, the following requirements apply to product selection:
   1. Available Manufacturers: Subject to compliance with requirements, manufacturers offering products that may be incorporated into the Work include, but are not limited to, manufacturers specified.

2.2 EQUIPMENT FOR ELECTRICITY METERING BY UTILITY COMPANY

A. Current-Transformer Cabinets: Comply with requirements of electrical power utility company.

B. Meter Sockets: Comply with requirements of electrical power utility company.

2.3 EQUIPMENT FOR ELECTRICITY METERING BY OWNER

A. Available Manufacturers:
   1. Milbank Manufacturing Co.
   2. Cooper, B-Line.
   3. Square D; Schneider Electric.

B. Kilowatt-Hour Meter Feed-Through Socket Enclosure: Electronic three-phase, 5-jaw, measuring electricity used.
   1. Voltage and Phase Configuration: Meter shall be designed for use on circuits with voltage rating and phase configuration indicated on the Drawings for its application.
   2. Ampacity: Meter ampacity shall be size based upon, and not rated lower, the serving main overcurrent device ampacity rating.
   3. NEMA 4X stainless steel (316L) enclosure.
      a. UL Listed.
   4. Coordinate additional requirements with utility company standards.

C. Kilowatt-Hour Meter Socket Enclosure and CT Cabinet: Electronic three-phase, measuring electricity used.
   1. Voltage and Phase Configuration: Meter shall be designed for use on circuits with voltage rating and phase configuration indicated on the Drawings for its application.

2. NEMA 4X stainless steel (316L) enclosure and CT cabinet.
   a. UL Listed.
3. Current-Transformer Cabinet: Listed or recommended by metering equipment manufacturer for use with sensors indicated.
   a. Provide
   b. Current-Transformers provide by utility company.
4. Coordinate additional requirements with utility company standards.

D. Kilowatt-Hour Meter: Provided by utility company.

PART 3 - EXECUTION

3.1 INSTALLATION

A. Comply with equipment installation requirements in NECA 1.

B. Install equipment for utility company metering. Install raceways and equipment according to utility company's written requirements. Extend grounding connections as required by utility company.

END OF SECTION 16211

THIS PAGE LEFT BLANK INTENTIONALLY

SECTION 16410 - ENCLOSED CIRCUIT BREAKERS

PART 1 - GENERAL

1.1 RELATED DOCUMENTS

A. Drawings and general provisions of the Contract, including General and Supplementary Conditions and other Division 1 Specification Sections, apply to this Section.

1.2 SUMMARY

A. This Section includes the following individually mounted, enclosed circuit breakers:
   1. Enclosed molded-case circuit breakers.
   2. Enclosures.

1.3 DEFINITIONS

A. HD: Heavy duty.

B. RMS: Root mean square.

1.4 SUBMITTALS

A. Product Data: For each type of enclosed circuit breaker, accessory, and component indicated. Include dimensioned elevations, sections, weights, and manufacturers' technical data on features, performance, electrical characteristics, ratings, and finishes.
   1. Enclosure types and details.
   2. Current and voltage ratings.
   3. Short-circuit current rating.
   4. UL listing for series rating of installed devices.

B. Shop Drawings: Diagram power wiring.

C. Operation and Maintenance Data: For enclosed circuit breakers to include in operation and maintenance manuals. In addition to items specified in Division 1 Section "Operation and Maintenance Data," include the following:
   1. Manufacturer's written instructions for testing and adjusting enclosed circuit breakers.

1.5 QUALITY ASSURANCE

A. Electrical Components, Devices, and Accessories: Listed and labeled as defined in NFPA 70, Article 100, by a testing agency acceptable to authorities having jurisdiction, and marked for intended use.

B. Comply with NFPA 70.

C. Product Selection for Restricted Space: Drawings indicate maximum dimensions for enclosed circuit breakers, including clearances between enclosures, and adjacent surfaces and other items. Comply with indicated maximum dimensions.

1.6 PROJECT CONDITIONS

A. Environmental Limitations: Rate equipment for continuous operation under the following conditions, unless otherwise indicated:
   1. Ambient Temperature: Not less than minus 22 deg F and not exceeding 104 deg F.
   2. Altitude: Not exceeding 6600 feet.

1.7 COORDINATION

A. Coordinate layout and installation of enclosed circuit breakers and components with other construction, including conduit, piping, equipment, and adjacent surfaces. Maintain required workspace clearances and required clearances for equipment access doors and panels.

PART 2 - PRODUCTS

2.1 MANUFACTURERS

A. In other Part 2 articles where titles below introduce lists, the following requirements apply to product selection:
   1. Manufacturers: Subject to compliance with requirements, provide products by one of the manufacturers specified.

2.2 MOLDED-CASE CIRCUIT BREAKERS

A. Available Manufacturers:
   1. Allen-Bradley; Industrial Products.
   2. Eaton Corporation; Cutler-Hammer Products:
   3. Square D/Group Schneider Electric:
   4. General Electric Co.; Electrical Distribution & Control Division:

B. Molded-Case Circuit Breaker: NEMA AB 1, with interrupting capacity to meet available fault currents.
   1. Thermal-Magnetic Circuit Breakers: Inverse time-current element for low-level overloads and instantaneous magnetic trip element for short circuits. Adjustable magnetic trip setting for circuit-breaker frame sizes 250 A and larger.

C. Molded-Case Circuit-Breaker Features and Accessories:

   1. Standard frame sizes, trip ratings, and number of poles.
   2. Lugs: Mechanical style with compression lug kits suitable for number, size, trip ratings, and conductor material.
   3. Undervoltage Trip: Set to operate at 35 to 75 percent of rated voltage with field-adjustable 0.1- to 0.6-second time delay.

2.3 RATINGS

A. UL listed as suitable for service entrance application.

2.4 ENCLOSURES

A. NEMA AB 1 and NEMA KS 1 to meet environmental conditions of installed location.
   1. NEMA 250, Type 4X, stainless steel (316L).

B. Operating handle shall be capable of being pad-locked in the Off/Open position, and interlocked to prevent the door from opening when the breaker is in the On/Closed position.

C. Complies with NEC gutter space requirements.

D. Provide the following factory installed items:
   1. Engraved nameplate with white letters on black background.
   2. Ground lugs.
   3. Rain-tight hubs.

PART 3 - EXECUTION

3.1 EXAMINATION

A. Examine elements and surfaces to receive enclosed circuit breakers for compliance with installation tolerances and other conditions affecting performance.

B. Proceed with installation only after unsatisfactory conditions have been corrected.

3.2 INSTALLATION

A. Comply with applicable portions of NECA 1, NEMA PB 1.1, and NEMA PB 2.1 for installation of enclosed circuit breakers.

B. Mount enclosed circuit breaker with top at no more than 6'-6", unless otherwise indicated.

3.3 IDENTIFICATION

A. Identify field-installed conductors, interconnecting wiring, and components; provide warning signs as specified in Division 16 Section "Electrical Identification."

B. Enclosure Nameplates: Label each enclosure with engraved metal or laminated-plastic nameplate as specified in Division 16 Section "Electrical Identification."

3.4 FIELD QUALITY CONTROL

A. Prepare for acceptance testing as follows:
   1. Inspect mechanical and electrical connections.
   2. Verify circuit breaker type and labeling.
   3. Verify rating of installed overcurrent protection.
   4. Inspect proper installation of type, size, and arrangement of mounting or anchorage devices complying with manufacturer's certification.

B. Perform the following field tests and inspections and prepare test reports:
   1. Infrared Scanning:
      a. Initial Infrared Scanning: After Substantial Completion, but not more than 60 days after Final Acceptance, perform an infrared scan of each enclosed circuit breaker. Open or remove doors or panels so connections are accessible to portable scanner.
         b. Instruments, Equipment and Reports:
         1) Use an infrared scanning device designed to measure temperature or to detect significant deviations from normal values. Provide calibration record for device.
         2) Prepare a certified report that identifies enclosed circuit breaker and describes scanning results. Include notation of deficiencies detected, remedial action taken, and observations after remedial action.

3.5 ADJUSTING

A. Set field-adjustable enclosed circuit-breaker trip ranges.

3.6 CLEANING

A. On completion of installation, vacuum dirt and debris from interiors; do not use compressed air to assist in cleaning.

B. Inspect exposed surfaces and repair damaged finishes.

END OF SECTION 16410

THIS PAGE LEFT BLANK INTENTIONALLY

SECTION 16521 - EXTERIOR LIGHTING

PART 1 - GENERAL

1.1 RELATED DOCUMENTS

A. Drawings and general provisions of the Contract, including General and Supplementary Conditions and Division 1 Specification Sections, apply to this Section.

1.2 SUMMARY

A. This Section includes the following:
   1. Exterior luminaires with lamps and drivers.
   2. Poles and accessories.

1.3 DEFINITIONS

A. CRI: Color-rendering index.

B. Luminaire: Complete lighting fixture, including driver housing if provided.

C. LED: Light Emitting Diode.

D. Pole: Luminaire support structure, including tower used for large area illumination.

1.4 STRUCTURAL ANALYSIS CRITERIA FOR POLE SELECTION

A. Dead Load: Weight of luminaire and its horizontal and vertical supports, and supporting structure, applied as stated in AASHTO LTS-4.

B. Live Load: Single load of 500 lbf, distributed as stated in AASHTO LTS-4.

C. Wind Load: Pressure of wind on pole and luminaire, calculated and applied as stated in AASHTO LTS-4.
   1. Wind speed for calculating wind load is 160 mph.

1.5 SUBMITTALS

A. Product Data: For each luminaire, pole, and support component, arranged in order of lighting unit designation. Include data on features, accessories, finishes, and the following:

1. Physical description of luminaire, including materials, dimensions, effective projected area, and verification of indicated parameters.
2. Details of attaching luminaires and accessories.
3. Details of installation and construction.
4. Luminaire materials.
5. Photoelectric relays.
6. Drivers, including energy-efficiency data.
7. LEDs/LED bars, including life, output, and energy-efficiency data.
8. Materials, dimensions, and finishes of poles.
9. Means of attaching luminaires to supports, and indication that attachment is suitable for components involved.
10. Anchor bolts for poles.
11. Manufactured pole foundations.

B. Shop Drawings:
1. Anchor-bolt templates keyed to specific poles and certified by manufacturer.
2. Design calculations, certified by a registered Florida professional engineer, indicating strength of screw foundations and soil conditions on which they are based.
3. Wiring Diagrams: Power wiring.

C. Pole and Support Component Certificates: Signed by manufacturers of poles, certifying that products are designed for indicated load requirements in AASHTO LTS-4 and that load imposed by luminaire has been included in design.

D. Operation and Maintenance Data: For luminaires and poles to include in emergency, operation, and maintenance manuals.

E. Warranty: Special warranty specified in this Section.

1.6 QUALITY ASSURANCE

A. Electrical Components, Devices, and Accessories: Listed and labeled as defined in NFPA 70, Article 100, by a testing agency acceptable to authorities having jurisdiction, and marked for intended use.

B. Comply with IEEE C2, "National Electrical Safety Code."

C. Comply with NFPA 70.

1.7 DELIVERY, STORAGE, AND HANDLING

A. Package poles for shipping according to ASTM B 660.

B. Store poles on decay-resistant-treated skids at least 12 inches above grade and vegetation. Support poles to prevent distortion and arrange to provide free air circulation.

C. Retain factory-applied pole wrappings on metal poles until right before pole installation. For poles with nonmetallic finishes, handle with web fabric straps.

1.8 WARRANTY

A. Special Warranty: Manufacturer's standard form in which manufacturer agrees to repair or replace products that fail in materials or workmanship; that corrode; or that fade, stain, perforate, erode, or chalk due to effects of weather or solar radiation within specified warranty period. Manufacturer may exclude lightning damage, hail damage, vandalism, abuse, or unauthorized repairs or alterations from special warranty coverage.
   1. Warranty Period for Luminaires: Five years from date of Substantial Completion.
   2. Warranty Period for Metal Corrosion: Ten years from date of Substantial Completion.
   3. Warranty Period for Color Retention: Five years from date of Substantial Completion.
   4. Warranty Period for LEDs: Replace LEDs and fuses that fail within 5 years from date of Substantial Completion.
   5. Warranty Period for Poles: Repair or replace lighting poles and standards that fail in finish, materials, and workmanship within manufacturer's standard warranty period, but not less than five years from date of Substantial Completion.

1.9 EXTRA MATERIALS

A. Furnish extra materials described below that match products installed and that are packaged with protective covering for storage and identified with labels describing contents.
   1. Drivers: Furnish at least one of each type.

PART 2 - PRODUCTS

2.1 MANUFACTURERS

A. In other Part 2 articles where titles below introduce lists, the following requirements apply to product selection:

B. Luminaire: Refer to Drawings for fixture manufacture and model number.

C. Pole: Provide pole by one of the available manufacturers, unless noted otherwise on the Drawings:
   1. Lyte Poles, Inc.

2.2 LUMINAIRES, GENERAL REQUIREMENTS

A. Luminaires shall comply with UL 1598 and be listed and labeled for installation in wet locations by an NRTL acceptable to authorities having jurisdiction.

B. Comply with IESNA RP-8 for parameters of lateral light distribution patterns indicated for luminaires.

C. Metal Parts: Free of burrs and sharp corners and edges.

D. Housings: Rigidly formed, weather- and light-tight enclosures that will not warp, sag, or deform in use.

E. Doors, Frames, and Other Internal Access: Smooth operating, free of light leakage under operating conditions, and designed to permit relamping without use of tools. Designed to prevent doors, frames, lenses, diffusers, and other components from falling accidentally during relamping and when secured in operating position. Doors shall be removable for cleaning or replacing lenses. Designed to disconnect ballast when door opens.

F. Exposed Hardware Material: Stainless steel (316L).

G. Light Shields: Factory installed in LEDs, arranged to block light distribution to indicated portion of normally illuminated area or field.

H. Factory-Applied Finish for Luminaire: Durable polyester power-coated finish, utilizing a 5-stage pre-treatment and painting process, able to withstand corrosive environment exposure. Color shall match luminaire color.

2.3 LUMINAIRE-MOUNTED PHOTOELECTRIC RELAYS

A. Comply with UL 773 or UL 773A.

B. Contact Relays: Factory mounted, single throw, designed to fail in the on position, and factory set to turn light unit on at 1.5 to 3 fc and off at 4.5 to 10 fc with 15-second minimum time delay. Relay shall have directional lens in front of photocell to prevent artificial light sources from causing false turnoff.
   1. Relay with locking-type receptacle shall comply with NEMA C136.10.
   2. Adjustable window slide for adjusting on-off set points.

2.4 DRIVERS

A. Low-Temperature Driver Capability: Rated by its manufacturer for reliable starting and operation of indicated LED(s) at temperatures 0 deg F and higher.

B. Driver Characteristics:
   1. Power Factor: 90 percent, minimum.

2. Sound Rating: A.
3. Total Harmonic Distortion Rating: Less than 10 percent.
4. Driver: Comply with ANSI C82.1, energy-saving, high power factor, Class P, automatic-reset thermal protection.
5. Case Temperature for Compact Lamp Ballasts: 65 deg C, maximum.
6. Transient-Voltage Protection: Comply with IEEE C62.41 Category A or better.

C. Low-Temperature LED Capability: Rated for reliable starting and operation with ballast provided at temperatures 0 deg F and higher.

D. Average rated life of 100,000 hours (at a base point of 25 deg C), minimum

2.5 LEDS

A. LED: ANSI C78.42, CRI 21 (minimum), color temperature 4000 K, and average rated life of 100,000 hours, minimum.

2.6 POLES AND SUPPORT COMPONENTS, GENERAL REQUIREMENTS

A. Structural Characteristics: Comply with AASHTO LTS-4.
1. Wind-Load Strength of Poles: Adequate at indicated heights above grade without failure, permanent deflection, or whipping in steady winds of speed indicated in Part 1 "Structural Analysis Criteria for Pole Selection" Article, with a gust factor of 1.3.
2. Strength Analysis: For each pole, multiply the actual equivalent projected area of luminaires and brackets by a factor of 1.1 to obtain the equivalent projected area to be used in pole selection strength analysis.

B. Luminaire Attachment Provisions: Comply with luminaire manufacturers' mounting requirements. Use stainless-steel (316L) fasteners and mounting bolts, unless otherwise indicated.

C. Mountings, Fasteners, and Appurtenances: Corrosion-resistant items compatible with support components.
1. Materials: Shall not cause galvanic action at contact points.
2. Anchor Bolts, Leveling Nuts, Bolt Caps, and Washers: Hot-dip galvanized after fabrication, unless stainless-steel items are indicated.
3. Anchor-Bolt Template: Plywood or steel.

D. Concrete Pole Foundations: Cast in place, with anchor bolts to match pole-base flange. Concrete, reinforcement, and formwork are specified in Division 3 Section "Cast-in-Place Concrete."

2.7 ALUMINUM POLES

A. Poles: Seamless, extruded structural tube complying with ASTM B 429, Alloy 6063-T6 with access handhole in pole wall.

B. Poles: ASTM B 209, 5052-H34 marine sheet alloy with access handhole in pole wall.
   1. Shape: Round, tapered or Square, tapered.
   2. Mounting Provisions: Butt flange for bolted mounting on foundation or breakaway support.

C. Grounding and Bonding Lugs: Welded 1/2-inch threaded lug, complying with requirements in Division 16 Section "Grounding and Bonding," listed for attaching grounding and bonding conductors of type and size listed in that Section, and accessible through handhole.

D. Brackets for Luminaires: Detachable, with pole and adapter fittings of cast aluminum. Adapter fitting welded to pole and bracket, then bolted together with stainless-steel (316L) bolts.
   1. Tapered oval cross section, with straight tubular end section to accommodate luminaire.

E. Finish: Durable polyester power-coated finish, utilizing a 5-stage pre-treatment and painting process, able to withstand corrosive environment exposure. Color shall match luminaire color.

PART 3 - EXECUTION

3.1 LUMINAIRE INSTALLATION

A. Install LEDs in each luminaire.

B. Fasten luminaire to indicated structural supports.
   1. Use fastening methods and materials selected to resist seismic forces defined for the application and approved by manufacturer.

C. Adjust luminaires that require field adjustment or aiming. Include adjustment of photoelectric device to prevent false operation of relay by artificial light sources.

3.2 POLE INSTALLATION

A. Align pole foundations and poles for optimum directional alignment of luminaires and their mounting provisions on the pole.

B. Clearances: Maintain the following minimum horizontal distances of poles from surface and underground features, unless otherwise indicated on Drawings:
   1. Fire Hydrants and Storm Drainage Piping: 60 inches.

2. Water, Gas, Electric, Communication, and Sewer Lines: 60 inches.
3. Trees: 10 feet

C. Concrete Pole Foundations: Set anchor bolts according to anchor-bolt templates furnished by pole manufacturer. Concrete materials, installation, and finishing requirements are specified in Division 3 Section "Cast-in-Place Concrete."

D. Foundation-Mounted Poles: Mount pole with leveling nuts, and tighten top nuts to torque level recommended by pole manufacturer.
1. Use anchor bolts and nuts selected to resist seismic forces defined for the application and approved by manufacturer.
2. Grout void between pole base and foundation. Use nonshrink or expanding concrete grout firmly packed to fill space.
3. Install base covers, unless otherwise indicated.
4. Use a short piece of 1/2-inch- diameter pipe to make a drain hole through grout. Arrange to drain condensation from interior of pole.

E. Raise and set poles using web fabric slings (not chain or cable).

3.3 CORROSION PREVENTION

A. Aluminum: When in direct contact with a earth or concrete, protect aluminum by wrapping the conduit with 0.010-inch- thick, anti-corrosion plastic tape applied twice, with a 50 percent overlap for each wrap application.

3.4 GROUNDING

A. Ground metal poles and support structures according to Division 16 Section "Grounding and Bonding."
1. Install grounding electrode for each pole, unless otherwise indicated.
2. Install grounding conductor pigtail in the base for connecting luminaire to grounding system.

B. Ground nonmetallic poles and support structures according to Division 16 Section "Grounding and Bonding."
1. Install grounding electrode for each pole.
2. Install grounding conductor and conductor protector.
3. Ground metallic components of pole accessories and foundations.

3.5 FIELD QUALITY CONTROL

A. Inspect each installed fixture for damage. Replace damaged fixtures and components.

B. Illumination Observations: Verify normal operation of lighting units after installing luminaires and energizing circuits with normal power source.

1. Verify operation of photoelectric controls.

C. Illumination Tests:

D. Measure light intensities at night. Use photometers with calibration referenced to NIST standards.

END OF SECTION 16521

16900 – SYSTEMS INTEGRATION

PART 1 - GENERAL

1.1 SUMMARY

A. The System Integrators shall be responsible for integrating the furnished equipment, material, and software into a fully operational control system.

B. The System Integrator shall work directly for the Contractor.

C. The SYSTEMS INTEGRATOR shall be responsible for supplying the following products and services:
   1. Field Instruments.
   2. Control Panel.
   3. Radio Line-of-Sight Study.
   4. All Components within Control Panel, as indicated on drawings.
   5. All SCADA / HMI programming updates to interface new Lift Station into the overall SCADA / HMI system.
   6. All CAT 5e patch cables.
   7. All miscellaneous items required for a fully operational control system integrated with the owner's existing SCADA / HMI system.

D. The CONTRACTOR shall be responsible for supplying the following products and services:
   1. Coordinating with the Electrical Utility Company for providing service to the site location.
   2. Coordinating the location of the Electrical Equipment and Control Panel, and installing it.
   3. Coordinate installation requirements with the Systems Integrator.
   4. Installing all field instruments.
   5. Providing all conduit and conductors associated with a complete and operational control system.

E. The System Integrators shall provide all software for this project, to be installed by the Integrator. This software shall include but not be limited to the following:
   1. PLC code
   2. HMI screens

F. The Systems Integrator shall provide the following drawings for the control and electrical system (Each of these drawings shall be submitted and approved as a shop drawing.):
   1. Block interconnection drawings for the control system and associated electrical equipment (including connections to process control panels).
   2. Point to Point wiring diagrams for all equipment connected to the control system.

3. Control Panel Drawing for any panel being built by the Integrator.
4. Equipment specification sheets.
5. Flow charts and control narratives for all control system logic to be approved by the Owner prior to implementation.

G. The Systems Integrator shall provide the following Operation and Maintenance Manuals for the control system (Each of these shall be custom written by the Integrator. In addition, each manual shall be submitted and approved as a shop drawing.):
1. Control System Operations Manual
2. Control System Maintenance Manual
3. Laminated Trouble Shooting Guides for both the Operators and the Maintenance Staff

H. The Contractor shall furnish and install all wiring, piping, conduits and necessary mounting and accessory equipment to provide a complete and fully operational instrumentation and control system.

1.2 SYSTEM INTEGRATOR QUALIFICATIONS

A. The following is a pre-approved list for Systems Integrators to be used for the project:
1. Automation Control Service, LLC.
2. Revere Control Systems.
3. Tesco Controls, Inc.

B. Systems Integrators wanting pre-approval shall submit documentation indicating they meet the requirements of this specification to the OWNER for review and approval. Pre-approval written acceptance from the Owner shall be in writing and shall be turned in and attached with bid documentation forms.

C. The Integrator shall be engaged full time in the design and manufacturer of PLC based control systems. The Integrator shall have documented experience in the municipal water and wastewater market.

D. The Integrator shall be of a sufficient size that the proposed project will utilize less than 20% of the total programming and project management man-hours that the Integrator has available in any given month. The Integrator shall provide a staffing plan that documents how this requirement will be meet.

E. The Control Systems Integrator shall maintain a local office within 100 driving miles of the project site for the past two years. This office shall be equipped with programming equipment, and staffed with a minimum of 3 programmers and 5 service technicians capable of performing routine maintenance, trouble shooting, and field programming changes on the proposed PLC control systems.

F. The control system Integrator shall have a panel shop located at their main facility and shall be able to obtain a UL listing for control panels.

G. All software development for this project shall be done in the local office.

H. The System Integrators shall perform a factory acceptance test for the control system at their local office, and notify the Owner of such time so the Owner has the opportunity to attend. During this test, the Systems Integrator shall demonstrate the complete operation of the control system including any field I/O and network connections. The test shall also have actual dynamic loads provided for each Across-the-Line Starter circuit connected to the control system.

I. Project Staffing:
   1. Project Manager:
      a. The Project Manager shall be a registered professional engineer licensed in the State of Florida and shall oversee all aspects of the control system project.
      b. The Project Manager shall have documented experience in the design and construction management of instrumentation / control and electrical systems. This experience shall include emergency power systems, variable frequency drive systems, harmonic correction, voltage drop and load flow analysis, breaker coordination, motor starters, conduit & conductor installation, and PLC / HMI programming.
      c. The Project Manager shall be located in the Systems Integrators local office.
      d. The Project Manager shall be the primary contact for the Owner and Engineer.
      e. The Project Manager shall be on site during the start-up and testing period for the proposed control system.
   2. Programmers:
      a. All Programmers shall be Graduate Engineers or Computer Science Majors with a 4 year college degree. As a minimum, all programmers shall have 5 years of experience in PLC / SCADA / HMI programming.
   3. Service Technicians:
      a. All Service Technicians shall have a minimum of a 2 year Associates Degree in some field related to computers or electrical maintenance.
      b. All Service Technicians shall have a minimum of five years of experience in PLC /SCADA / HMI systems.
      c. All Service Technicians shall have experience troubleshooting: motor starters, PLC, SCADA, and HMI systems.
      d. Service Technicians shall have proficiency in using the following equipment: volt meters, oscilloscopes, PLC programming software, HMI configuration tools

1.3 PLC / HMI PROGRAMMING

A. All PLC code shall be written in either "Function Block" style. The System Integrator may use "Ladder Logic" for simple logic functions with the Owner's approval prior to programming.

B. All PLC / HMI code shall be supplied to the Owner with fully descriptive comments. All HMI code shall be supplied to the Owner with fully descriptive screen and tag data.

C. The Integrator shall provide the Owner with a flow chart of all PLC code as well as a written algorithm of the codes functions.

D. The graphic standards to be used for all HMI equipment shall be coordinated with the Owner and the existing HMI system. All control panel screens will be custom.

E. The Systems Integrator shall provide the Owner with an I/O map of all process variables in the PLC.

F. All PLC code shall be the property of the Owner.

G. The Contractor shall provide three copies of all commented PLC, SCADA, and HMI, code/script/screen layouts to the Owner in electronic format prior to acceptance by the Owner. Any documentation not containing symbol information or comments will not be considered acceptable.

1.4 SUBMITTALS

A. Verification indicating compliance with the all aspects listed under the Systems Integrator Qualifications.

PART 2 - HUMAN-MACHINE INTERFACE (HMI)

A. The Human-Machine Interface software for the SCADA HMI shall be based upon the existing installation, which shall be field verified. The Systems Integrator shall be responsible for providing all necessary licenses, drivers, and required network and software packages as required, for the configuration as detailed in the project plans. The Systems Integrator shall be required to provide the necessary HMI screens to monitor and control the equipment installed in this project. The Integrator shall be required to submit the proposed HMI screens to the Engineer and Owner for approval a minimum of 4 weeks prior to the factory testing.

B. All alarms generated by equipment installed on the project shall be displayed in the alarm summary page. The Integrator shall coordinate with the Owner when configuring the system alarms and subsequent actions. The use of HMI alarm tags will not be allowed unless sufficient reason is submitted and approved.

PART 3 - EXECUTION

3.1 CONTRACTOR'S RESPONSIBILITY

A. The Contractor shall coordinate the System Integrators during construction, testing, start-up, calibration and acceptance of the instrumentation and control system. The Contractor is responsible for a complete and fully operational instrumentation and control system.

3.2 GENERAL INSTALLATION

A. The instrumentation and control system, peripherals, and accessory equipment shall be installed in accordance with the equipment manufacturer's instructions and located as shown on the Contract Drawings or as approved by the Owner and Engineer.

B. The Contractor shall coordinate the installation, placing and location of system components, their connections to the process components, panels, cabinets and devices, as required to complete the work subject to the Engineer's approval. The Contractor shall be responsible to insure that all field wiring for power and signal circuits between existing devices, the proposed control system are correctly done in accordance with best industry practice to insure a satisfactory functioning installation

3.3 TEST AND ACCEPTANCE

A. The Owner shall witness On-site Operability Tests, and have the option to have 1 representative present to during the Factory Acceptance Tests.

3.4 INSTALLATION

A. All equipment and devices for the instrumentation and control system shall be installed in the locations shown on the drawings, in accordance with the manufacturer's recommendations, and in compliance with the requirements of these specifications. Any alterations to equipment type and locations shall be indicated in the submittal package with a listed reason(s) as to why the change occurred.

3.5 FIELD ACCEPTANCE TESTS

A. No power shall be activated to any part of the instrumentation and control system until the Owner or Engineer receive a written certified statement by the system supplier that the installation is complete and ready for energizing. The Contractor is responsible for proper coordination and scheduling, and any damage to the instrumentation and control system.

B. After the installation is completed, the Contractor, through the System Integrator, shall test each component of the instrumentation and control system. After all systems are operating properly, the Contractor shall notify the Owner and demonstrate the full operation of the system. The Contractor shall make all necessary adjustments and correct or replace faulty equipment to the satisfaction of the Engineer.

C. The control system integrator shall be required to provide all test equipment necessary to test the control system and computer networks (radio) per industry standards.

3.6 FIELD CALIBRATION

A. All instrumentation and controls shall be calibrated in the presence of the Owner in accordance with the manufacturer's instructions to the accuracy specified.

B. The Contractor shall provide field calibration as necessary until the project is considered Substantially Complete by the Engineer.

3.7 MAINTENANCE AND CALIBRATION PERIOD

A. During the first year of operation after substantial completion of the project, the Contractor shall provide maintenance and calibration services for the newly installed instrumentation and control systems. All maintenance and calibration activities shall conform to the manufacturer's requirements and shall be provided by a certified technician. This work shall include all labor, tools, equipment, materials and all other expenses at no additional cost to the Owner. Calibration and maintenance shall be performed a minimum of every 4 months.

3.8 START-UP SERVICES

A. The System Integrator shall include 8 man-hours for start-up in their bids. These hours will be on the site hours and exclude travel.
   1. Any hours not used for Start-up shall be used for Owner Directed Field Programming Changes.
   2. Contractor and Integrator shall plan and be prepared for the start-up. Any additional hours required to complete the start-up shall not result additional compensation by the owner.

B. Coordinate the start-up time and location with the owner at least 1 week prior to scheduled start-up. Owner shall have the opportunity to have representation present during the entire start-up. In the event that the Owner chooses not have representation present for start-up, the Systems Integrator shall obtain written documentation from the Owner indicating they will not require representation during the start-up and it may proceed as scheduled. A copy of this written documentation shall be provided to the Contractor at least 1 day prior to start-up.

PART 4 - AS-BUILT DOCUMENTATION

A. The Contractor shall coordinate with the Systems Integrators and provide the Owner with a complete set of AutoCAD 2007 control drawings for the project. These drawing shall include site electrical, control panel schematic/layout drawings, programming code, etc.. The drawings shall indicate all wiring numbers.

B. The Systems Integrator shall provide detailed documentation of all computer code developed for this project. This documentation shall include but not be limited to: written descriptions, comments in PLC code, and HMI scripting. All software and code developed for this project shall be considered property of the Owner.

C. All As-Built documentation shall be provided in both paper and electronic formats

END OF SECTION 16900

THIS PAGE LEFT BLANK INTENTIONALLY

16910 – CONTROL PANEL CONSTRUCTION

PART 1 - GENERAL

1.1 SCOPE

A. The Systems Integrator shall furnish, test, and startup all furnished electrical control panels and control system components related to their furnished equipment.

B. Specifically included are the following control panels:
   1. Lift Station Control Panel as indicated in electrical drawings, including equipment listed on equipment list in the indicated corresponding locations within the overall control panel.

1.2 SUBMITTALS

A. Product Data: For each type of product supplied. Include cut-sheet indicating rated capacities, weights, operating characteristics, furnished specialties, and accessories.

B. Shop Drawings: Dimensioned plans, elevations, sections, and details showing minimum clearances, conductor entry provisions, gutter space, installed features and devices, and material lists for each switch specified.

C. Connection Diagrams: For each type of product supplied, provide a terminal connection diagram showing terminal numbers and corresponding function for each terminal connection. These same terminal references shall be utilized in the point-to-point wiring diagrams.

D. Alterations to Design: Any and all alterations to design, equipment, devices, instrumentation, layouts, etc. shall be indicated clearly in the submittal package. As part of the alterations, state the reason(s) for the alteration. No alteration shall occur without prior written approval, submitted and accepted by the Owner. Written approval shall be included with the indicated alterations.

PART 2 - PRODUCTS

2.1 GENERAL REQUIREMENTS FOR CONTROL PANELS

A. All control panels shall be constructed in accordance with the following standards: National Electrical Manufacturers Association (NEMA), Institute of Electrical and Electronics Engineers (IEEE), Underwriter Laboratories (UL), Nation Fire Protection Association (NFPA), and Instrumentation Systems and Automation Society (ISA)

B. All control panels shall be constructed in a UL approved production facility and bare all applicable UL labels for panel construction.

C. The completed panel shall be factory tested prior to shipment. Field installation by the Contractor shall consist only of setting the panel in place and making necessary pneumatic and/or electrical connections.

D. All control panels shall be designed to operate at the service voltage as indicated in the project plans.

E. Refer to Equipment List on drawings for product data to be provided with control panel.

F. The main utility breaker within the panel shall be rated for service entrance, as required per NFPA 70.

2.2 CONTROL PANEL ENCLOSURES

A. The entire Control Panel Enclosure and assembly shall be rated NEMA 4X.

B. All enclosures, control panels, and associated hardware interior and exterior hardware shall be constructed of stainless steel (316L).

C. All interior components shall be clearly identified with plastic identification nametags. The tags shall be white with black lettering.

2.3 CONTROL PANEL WIRING

A. Wiring, where required, shall be general-purpose open type, neatly bundled and laced or installed in plastic wiring troughs. Wire shall be stranded No. 14 AWG minimum, with thermoplastic insulation rated for 600V and 90 degrees C.

B. Wiring colors shall be as follows:
   1. All ungrounded AC conductors operating at the supply voltage shall be "Black"
   2. All ungrounded AC control conductors operating at voltage less than supply shall be "RED"
   3. All ungrounded DC control conductors shall be "Blue"
   4. All ungrounded AC control conductors or wires that remain energized when the main disconnect is in the "OFF" position shall be "Yellow"
   5. All grounded AC current carrying conductors shall be "White"
   6. All grounded DC current carrying conductors shall be "White with a Blue stripe"
   7. All grounded AC current carrying conductors that remain energized when the main disconnect is in the "OFF" position shall be "White with a Yellow stripe"
   8. All ground conductors shall be "Green"
   9. A wiring color code legend shall be mounted inside the control panel door.

C. No terminal strip may be located closer than 8" from any side or bottom of the control panel. This is designed to allow for adequate wire bending radius for field terminations.

D. All wiring shall be clearly marked with an identification number consistent with the wiring schematic.

E. Devices mounted on the enclosure door or interior dead front panel shall be run in spiral wrap to avoid pinch points when opening and closing the enclosure door(s) or interior panels

2.4 MISCELLANEOUS

A. Engraved laminated plastic nameplates shall be furnished for each front panel section of the Control Panel assembly. The Contractor shall coordinate with the Owner for nameplate color and naming conventions. All instruments and components shall be tagged on rear with embossed plastic tape labels.

PART 3 - EXECUTION

3.1 CONTRACTOR'S RESPONSIBILITY

A. The Contractor shall coordinate the work of the service personnel during construction, testing, and acceptance of the work.

B. The Contractor shall receive final approval on all panel, enclosure, and equipment layouts by the Engineer and Owner prior to fabrication or installation.

3.2 QUALITY ASSURANCE

A. All control panels shall be factory tested and certified prior to releasing for shipment. The testing shall consist of but not limited to the following:
   1. Point to point testing of all wiring prior to application of power
   2. The intended supply voltage shall be applied to the control panel and all components shall be tested for proper operation and calibration.
   3. The programmable logic controller and operator interface code shall be loaded, and each shall be tested for functionality.
   4. All components shall be checked to confirm that each device has been installed per the plans and specifications as well as the Manufacturer's recommendations.
   5. The enclosure shall be inspected for defects and shall be repaired or replaced if necessary.
   6. All labeling and identification tags shall be verified and be clean and visible.

B. Prior to shipment one copy of the control panel drawings shall be placed in the drawing pocket of the enclosure.

3.3 INSTALLATION

A. All equipment and devices for the work shall be installed in the locations shown on the drawings, in accordance with the manufacturer's recommendations, and in compliance with the requirements of these specifications.

B. The Contractor shall be responsible for coordinating the installation of all equipment in the proposed locations with all other trades performing work on the project that may be affected.

3.4 FINAL INSPECTION

A. Include all changes and/or alterations in the control panels prior to final inspection and acceptance by the owner.

B. Any changes and/or alterations in the Control Panels shall be reflected/updated in all Control Panel Schematics prior to acceptance by the Owner. This includes all electronic copies delivered to the Owner.

END OF SECTION 16910

16950 – FIELD INSTRUMENTS

PART 1 - GENERAL

1.1 RELATED DOCUMENTS

A. Drawings and general provisions of the Contract, including General and Supplementary Conditions and Division 1 Specification Sections, apply to this Section.

1.2 SUMMARY

A. This section includes the storage, installation, calibration, and warranty of the instrumentation.

1.3 DELIVERY, STORAGE AND HANDLING

A. Deliver units as factory-assembled units, to the extent allowable by shipping limitations, with protective crating and covering.

B. Lift and support units with the manufacturer's designated lifting and covering.

1.4 PROJECT CONDITIONS

A. Field Measurements: Verify dimensions by field measurements. Verify clearances for installation.

1.5 COORDINATION AND SCHEDULING

A. Coordinate with the Owner for the equipment shop drawings (including wiring schematics) and location of mounting areas.

1.6 INSTRUMENT QUANTITIES FOR BIDING PURPOSES

A. Refer to drawings and equipment list.

PART 2 - PRODUCTS

2.1 MANUFACTURE AND MODEL

A. As indicated on Equipment List, located on the drawings.

2.2 WARRANTY

A. The equipment shall be warranted for a period of two years after startup.

B. Components failing to perform as specified by the engineers, or as represented by the manufacture, or proven defective in service during the warranty period, shall be replaced, repaired or satisfactorily modified by the manufacture without cost to the Owner when returned to the manufacture.

2.3 WORKMANSHIP

A. All materials and equipment shall be installed in accordance with the approved recommendations of the manufacturer to conform within the contract documents. The installation shall be accomplished by workmen skilled in this type of work.

PART 3 - EXECUTION

3.1 DEMONSTRATION

A. Review data in the operation and maintenance manuals. Refer to Division 1 Section "Contract Closeout".

B. Demonstrate operation of products specified in this Section. Briefly identify location and describe function, operation, and maintenance of each product.

3.2 INSTALLATION

A. Install according to manufacturer's written instructions.

B. Install units with clearances for service and maintenance.

C. Contractor shall install required electric conduit and cables for all field instruments. Each field instrument shall be supplied with 2#18 AWG twisted-shielded pair of signal wire in a 1"C to the terminal block location indicated within the control panel.

3.3 CONNECTIONS

A. Electrical: Conform to applicable requirements in Division 16 Sections.

B. Grounding: Ground equipment. Tighten electrical connectors and terminals, including grounding connections, according to manufacturer's published torque-tightening values. Where manufacturer's torque values are not indicated, use those specified in UL 486A and UL 486B.

3.4 FIELD QUALITY CONTROL

A. Manufacturer's Field Service: Provide services of a factory-authorized service representative to supervise the field assembly of components and installation and electrical connections, and to report results in writing.

B. Contractor shall install all equipment and related accessories before having the manufacturer's field service. If additional trips are required due to incorrect installation, Contractor shall pay for the costs for the field services.

3.5 DOCUMENTATION

A. Manuals: Provide the Owner with original copies of the installation, operation, maintenance, and calibration manuals as provided with the equipment. In addition provide the original warranty cards and product literature. Copies of this information shall not be accepted.

END OF SECTION 16950

THIS PAGE LEFT BLANK INTENTIONALLY

ALL WORK SHALL BE CONSTRUCTED IN ACCORDANCE WITH THE LATEST EDITION OF THE E.C.U.A. STANDARD SPECIFICATIONS

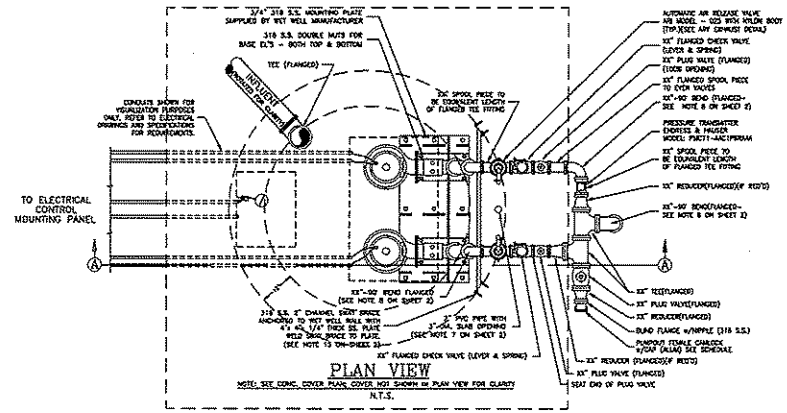

PLAN VIEW

NOTE: SEE DOMC, COVER PLAN, COVER NOT SHOWN IN PLAN VIEW FOR CLARITY

N.T.S.

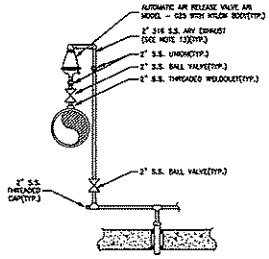

ARV EXHAUST DETAIL

N.T.S.

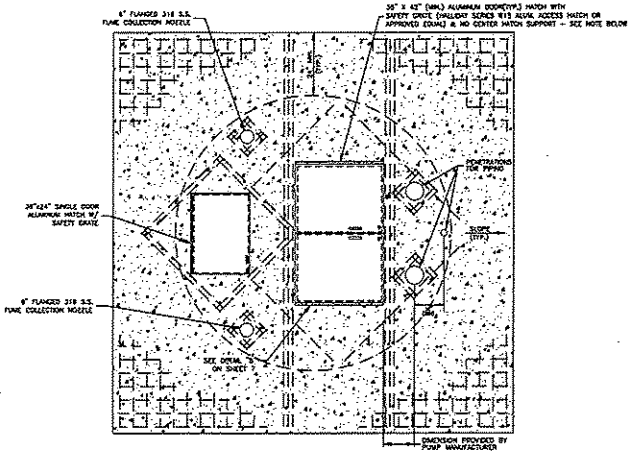

NOTES:
- IT SHALL BE THE CONTRACTOR'S RESPONSIBILITY TO SELECT THE HATCH SIZE THAT WILL ENABLE THE PUMPSET TO BE EASILY REMOVED FROM THE WET WELL THROUGH THE HATCH. SEE SPECIFICATIONS FOR CLEARANCE REQUIREMENTS.
- BEAM SIZE, SPACING FOR BASE AND CAP SHALL BE DESIGN BY A FLORIDA LICENSED ENGINEER. CAP SHALL BE RATED FOR A MINIMUM 300 P.S.F. PEDESTRIAN LOADING
- HATCH SHALL BE HALLIDAY TYPE ALUM. W13 OR APPROVED EQUAL. FLUSH INSTALLATION, SINGLE CENTERING, 300 L.B/SF LOADING, AND GASKETED TO BE RAIN TIGHT AND PROVIDE DOOR CONTROL.
- SAFETY GRATING SHALL BE HINGED ON SAME SIDE AS HATCH.
- HEAVIER DESIGN LOADS MY BE REQUIRED.

CONCRETE COVER PLAN

N.T.S.

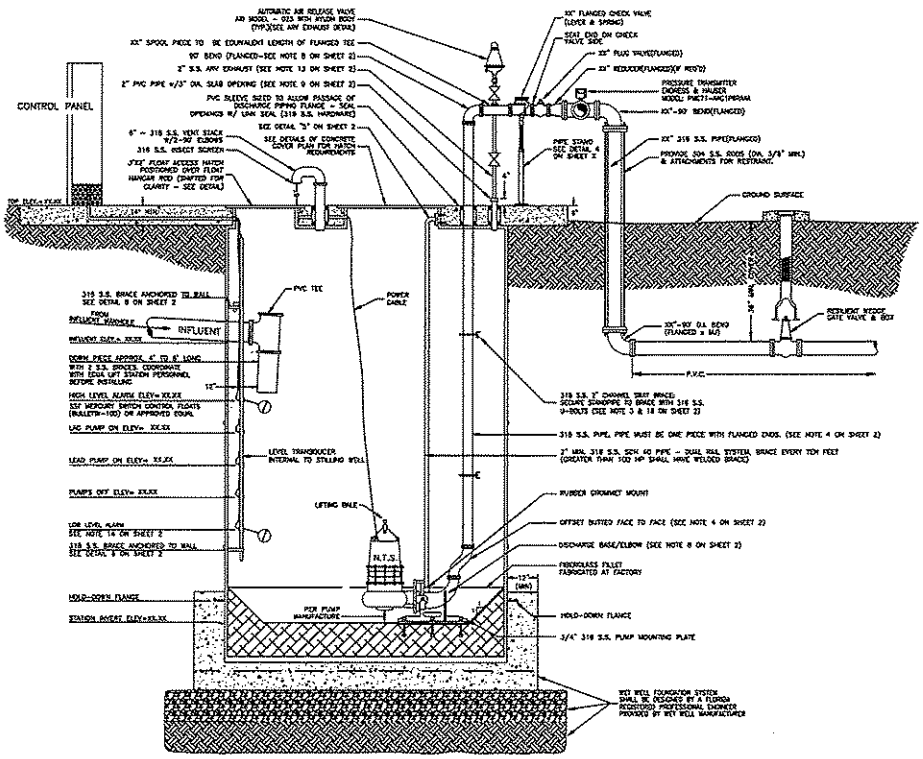

CROSS SECTION AA

N.T.S.

PUMP OUT SCHEDULE	
DISCHARGE	
1	4
2	6
3	8
4	10
12 + GARGER	*

*COORDINATE WITH ECUA

PUMP INFORMATION:	
MANUFACTURER	PER SPEC.
TYPE PUMP	SUBMERSIBLE
MODEL NO.	PER SPEC.
PUMP MOTOR POWER(HP & TOR)	50 HP/ 1PH
IMPELLER SIZE & NO.	PER MANUF.
DISCHARGE PIPE SIZE	XX"XXX
MAX MOTOR RPM	XXXXX
MAX SPEED	PER SPEC.
MIN. EFF. @ DESIGN POINT	XXXXX
VOLT/PHASE	XXX/3PH

PUMP DISCHARGE SHALL BE CENTERLINE ONLY, NO TANGENTIAL DISCHARGE ALLOWED.

WET WELL INFORMATION:	
WET WELL DIAMETER	8' MIN.
WET WELL DEPTH	XX.XX'
INFLUENT DIA. - ELEV.	XX"-XX.XX
FORCE MAIN DIA. - ELEV.	XX"-XX.XX'(SEP)
INVERT ELEV OF STATION	XX.XX
PUMPS OFF ELEV.	XX.XX
HIGH LEVEL ALARM ELEV.	XX.XX
TOP ELEV. OF STATION	XX.XX

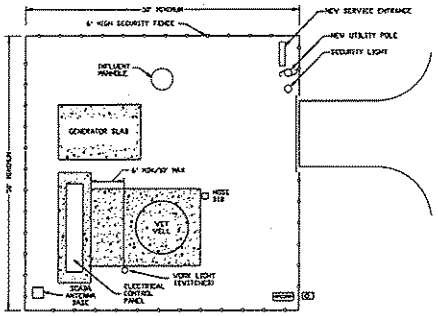

NOTE:
- 6' HIGH FENCE (TO CONFORM WITH SURROUNDINGS) DIMENSIONS, CONFIGURATION & GATE, MAY VARY WITH EACH LOCATION. ECUA L/S PERSONNEL TO VERIFY LOCATION OF GATE PRIOR TO INSTALLATION.
- STORMWATER FLOW SHALL BE DIRECTED AWAY FROM LIFT STATION SITE.
- ALL INFLUENT LINES TO LIFT STATION MUST BE ROUTED TO THE INFLUENT MANHOLE TO THE WET WELL. A SINGLE GRAVITY LINE SHALL CONNECT THE INFLUENT MANHOLE TO THE WET WELL AT A DISTANCE OF NO GREATER THAN 30 FEET.
- IN-GRADE PULL BOXES SHALL BE LOCATED 10'-0' FROM WET WELL.

LIFT STATION SITE PLAN

N.T.S.

	REVISIONS	BY
X	XX	XX

IMPROVEMENTS TO WASTE WATER COLLECTION SYSTEM

LIFT STATION XXX XXXXXXXXXX

LIFT STATION DETAIL SHEET ONE

EMERALD COAST UTILITIES AUTHORITY

APPROVED BY:

Drawn:	TEJ
Designed:	SNH
Checked:	XXX
Date:	MAY '13
Scale:	N.T.S.
Project No:	XXXXX
Sheet No.	1
OF	2 Sheets

ALL WORK SHALL BE CONSTRUCTED IN ACCORDANCE WITH THE LATEST EDITION OF THE E.C.U.A. STANDARD SPECIFICATIONS

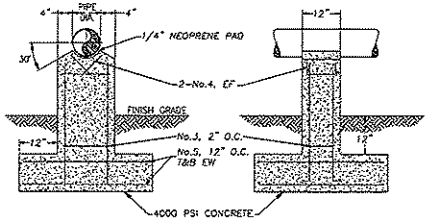

① PIPE SUPPORT DETAIL
N.T.S.

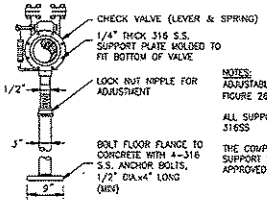

NOTES:
ADJUSTABLE PIPE SUPPORT "ANVIL FIGURE 265" OR EQUAL

ALL SUPPORT MATERIALS SHALL BE 316SS

THE COMPONENTS OF THE VALVE SUPPORT SHALL BE ENLARGED AS APPROVED BY ECUA.

ADJUSTABLE
④ PIPE STAND DETAIL
N.T.S.

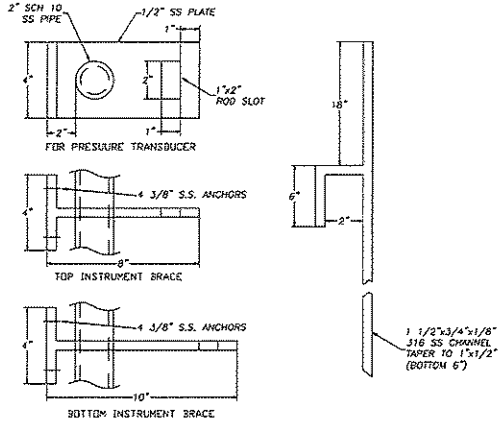

⑥ LEVEL INSTRUMENTATION SUPPORT
N.T.S.

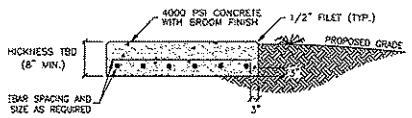

- OTHER DIMENSIONS TO BE DETERMINED BY GENERATOR SIZE
- MINIMUM OF 1' CLEARANCE AROUND ALL SIDES OF GENERATOR AND/OR TRAILER.

② GENERATOR SLAB DETAIL
N.T.S.

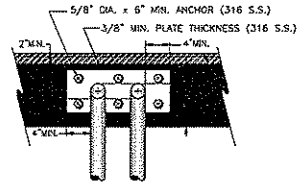

- REQUIRE SUBMITTAL FOR "STYLE" OF RAIL ATTACHMENT.
- PUMP RAILS TO BE 2" MIN. 316 S.S. WELDED TO PLATE IN A MANNER ACCEPTABLE TO ECUA.

⑤ GUIDE RAIL
N.T.S.

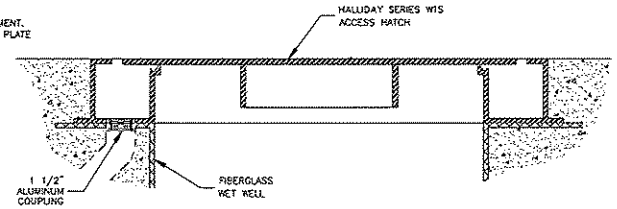

NOTE:
- ALL ALUMINUM SURFACES IN CONTACT WITH CONCRETE SHALL BE COATED WITH A BITUMASTIC PAINT.

⑧ HATCH DETAIL
N.T.S.

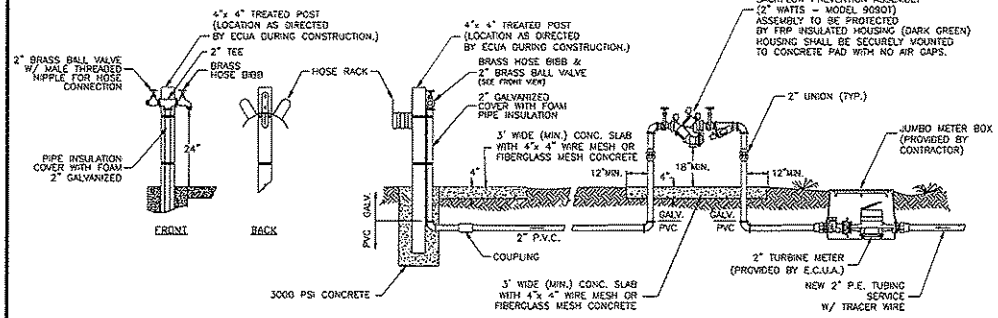

③ LIFT STATION METER DETAIL
N.T.S.

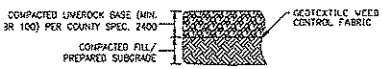

NOTES:
1. ALL DEPTHS ARE COMPACTED DEPTHS.

2. PREPARE SUBGRADE BY CLEANING AND GRUBBING, STRIPPING TOPSOIL AND PLACING GEOTEXTILE FABRIC.

3. FILL FOR LIFT STATION SITE SHALL BE SAND MECHANICALLY COMPACTED TO 95% MODIFIED PROCTOR DENSITY IN MAXIMUM 12-INCH LIFTS LOOSE MEASUREMENT TO ACHIEVE CORRECT GRADE.

⑦ LIFT STATION SITE DETAIL
N.T.S.

GENERAL LIFT STATION NOTES

1. THE LOCATION OF INFLUENT LINES, WATER SUPPLY, ETC. ARE DRAWN OUT OF ORIENTATION ON SECTIONAL VIEW. SEE PLAN VIEW FOR ORIENTATION.

2. ALL PENETRATIONS IN WET WELL WALL FOR PIPING, ELECTRICAL, ETC. SHALL BE SEALED & SLEEVED.

3. TO PROTECT STANDPIPE FROM SWAY BRACE, EITHER WRAP PIPE WITH RUBBER SHEETING OR INSERT ALL U-BOLTS THROUGH RUBBER HOSE.

4. PIPING WITHIN THE WET WELL SHALL BE FLANGED SCHEDULE 10 316 STAINLESS STEEL. INTERMEDIATE JOINTS SHALL BE WELDED. FITTINGS WITHIN THE WET WELL SHALL BE FLANGED 316 STAINLESS STEEL. ALL NUTS, BOLTS & ACCESSORIES WITHIN THE WET WELL SHALL BE 316 STAINLESS STEEL.

5. PIPE AND FITTINGS OUTSIDE OF THE WET WELL AND ABOVE GROUND SHALL BE 316 STAINLESS STEEL (FLANGED, SCHEDULE 10).. ALL WELD-ON FLANGES SHALL BE 125# RF SOCKET- WELD FLANGE OR RF WELD NECK FLANGE (TYPE). ALL BOLTS, WASHERS AND NUTS SHALL BE 316 STAINLESS STEEL AND SHALL BE COATED WITH "NEVER SEIZE" TYPE COATING.

6. THE ANNULAR SPACE BETWEEN TOP SLAB AND FORCE MAIN PIPE SHALL BE SEALED VIA LINK SEAL.

7. PROVIDE 4" PIPE (PVC, SCH. 80) THROUGH CONCRETE TOP WITH CAPPED TOP AND OPEN END BOTTOM. SEAL AROUND CONCRETE TOP WITH NON-SHRINK GROUT.

8. INTERIOR SURFACES OF FITTINGS INDICATED, INCLUDING THE FLANGE MATING SURFACES, AS WELL AS THE PUMP IMPELLER, VOLUTE, AND BACKPLATE SHALL BE COATED WITH BELZONA 1321 CERAMIC S-METAL. (UNLESS OTHERWISE SPECIFIED BY OWNER)

9. PLUG VALVES SHALL HAVE AN ALLOWABLE FLOW CAPACITY EQUAL TO 100% OF THE ADJACENT PIPE AREA, AND SHALL ALLOW "PIGGING".

10. THE INTERIOR OF ALL VALVES SHALL BE COATED.

11. CONTRACTOR SHALL PROVIDE 2-3/4" CONDUITS (ONE FOR POWER AND ONE FOR SIGNAL) FOR FLOW METER (IF REQUIRED). CONTRACTOR SHALL TERMINATE WIRES IN OWNER PROVIDED ELECTRICAL CONTROL CABINET.

12. EXHAUST OF ARV'S TO BE FIELD LOCATED, PROVIDE FITTINGS AS NECESSARY, AND PIPED TO WET WELL USING 2" 316 S.S. PIPE.

13. LOW LEVEL ALARM ELEV. TO BE SET IN COORDINATION WITH ECUA AND PUMP MANUFACTURER.

14. CONNECTION OF SWAY BRACE MOUNTING PLATE SHALL BE COORDINATED WITH PUMP MANUFACTURER.

15. A SECOND BRACE IS TO BE INSTALLED WHEN THE DEPTH OF WET WELL IS GREATER THAN 10' DEEP OR WHEN THE PUMPS ARE GREATER THAN 10 HP.

REVISIONS		BY
X	XX	XX

IMPROVEMENTS TO WASTE WATER COLLECTION SYSTEM
LIFT STATION XXX XXXXXXXXXX
LIFT STATIN DETAILS

EMERALD COAST UTILITIES AUTHORITY

APPROVED BY:

Drawn:	TEJ
Designed:	SNH
Checked:	XXX
Date:	MAY '13
Scale:	N.T.S.
Project No:	XXXXX
Sheet No.	2
	OF 2 Sheets

ALL WORK SHALL BE CONSTRUCTED IN ACCORDANCE WITH THE LATEST EDITION OF THE E.C.U.A. STANDARD SPECIFICATIONS

480V 3ø 1HP – 15HP FULL VOLTAGE STARTER ELECTRICAL STANDARD

FOR

EMERALD COAST UTILITY AUTHORITY ESCAMBIA COUNTY, FL

SHEET NO.	SHEET DESCRIPTION
1	MAIN POWER DISTRIBUTION SCHEMATIC
2	CONTROL SCHEMATIC
3	DIGITAL INPUTS SCHEMATIC
4	DIGITAL OUTPUTS & ANALOG INPUTS SCHEMATIC
5	ANALOG OUTPUTS & STARTER CONTROL SCHEMATIC
6	TERMINAL BLOCK LAYOUT AND FIELD CONNECTIONS
7	LINEAR EXTERIOR PANEL LAYOUT & FIELD CONDUIT REQUIREMENTS
8	POWER & PUMP 1 INTERNAL PANEL LAYOUTS
9	PUMP 2 & CONTROL PANEL INTERNAL LAYOUTS
10	EQUIPMENT LIST
11	HORSEPOWER RELATED EQUIPMENT & POWER CONDUCTORS
12	PANEL TO PANEL CONDUCTORS & EQUIPMENT
13	PANEL TO PANEL WIRING
14	LINEAR STAINLESS STEEL FRAME LAYOUT
15	TABLES, LEGENDS & TAGS
16	ISR INSTRUCTIONS
17	GENERAL NOTES AND DETAILS
18	GENERAL NOTES AND DETAILS

REVISIONS	BY

IMPROVEMENTS TO WASTEWATER COLLECTION SYSTEM

LIFT STATION CONSTRUCTION DETAILS

ELECTRICAL STANDARDS

FINAL SUBMITTAL

EMERALD COAST UTILITIES AUTHORITY

APPROVED BY:

Drawn	
Designed	
Checked	
Date	MAY '13
Scale	
Project No	
Sheet No.	0
	OF 18 Sheets

VOLTS	PHASE	FREQ	FLA
480	3	60	XXX
LARGEST MOTOR			
VOLTS	PHASE	FREQ	FLA	HP
480	3	60	XXX	XX
SHORT CIRCUIT CURRENT: 10KA RMS SYMMETRICAL, 480VAC MAXIMUM			

*FOR NAMEPLATE DATA FOR EACH HORSEPOWER RATING SEE SHEET 15 'NAMEPLATE DATA' TABLE

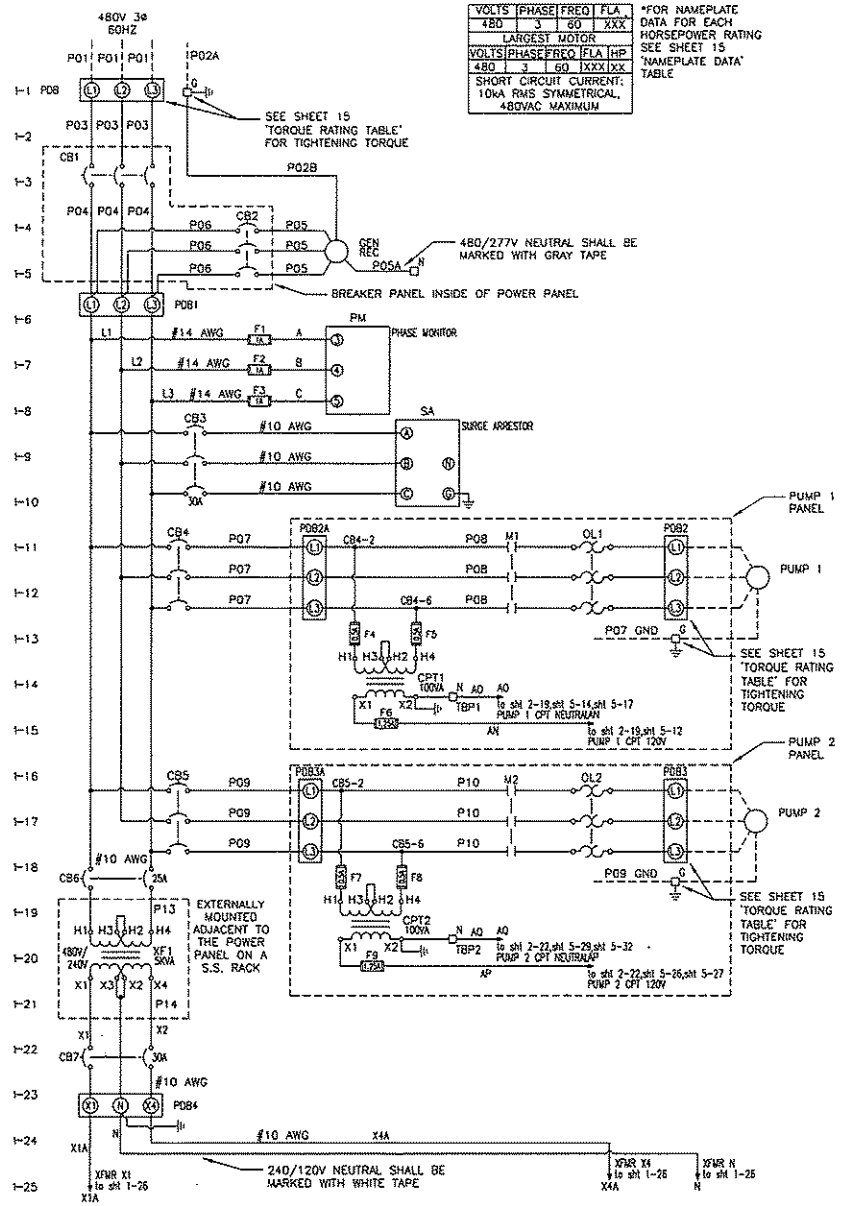

ALL WORK SHALL BE CONSTRUCTED IN ACCORDANCE WITH THE LATEST EDITION OF THE E.C.U.A. STANDARD SPECIFICATIONS

NOTES:

1. THE COMPLETED CONTROL PANEL SHALL BE LABELED AND MANUFACTURED TO MEET U.L. 508A AND 698A CERTIFICATION.
2. CONTROL PANEL WIRING SHALL BE STRANDED COPPER, MINIMUM SIZE #16 AWG WITH 600V 90DEGREE C TYPE THHN INSULATION.
3. CONTROL PANEL WIRING SHALL BE NUMBERED AT BOTH ENDS WITH TYPE WRITTEN, HEAT SHRINKABLE WIRE MARKERS.
4. ALL WIRING WITHIN THE CONTROL PANEL SHALL BE COLOR CODED OR CODED USING ELECTRICAL TAPE IN SIZES WHERE COLORED INSULATION IS NOT AVAILABLE. THE FOLLOWING CODING SHALL BE USED:
   - 4.1. UNGROUNDED AC CONDUCTORS AT SUPPLY VOLTAGE – BLACK
   - 4.2. GROUNDED AC CURRENT CARRYING CONDUCTORS – WHITE
   - 4.3. UNGROUNDED AC CONDUCTORS BELOW SUPPLY VOLTAGE – RED
   - 4.4. UNGROUNDED AC CONTROL CONDUCTORS & CONDUCTORS THAT REMAIN ENERGIZED WHEN THE MAIN DISCONNECT IS OFF – YELLOW
   - 4.5. UNGROUNDED DC CONTROL CONDUCTORS – ORANGE
   - 4.6. GROUNDED DC CURRENT CARRYING CONDUCTORS – BROWN
   - 4.7. INTRINSICALLY SAFE WIRING – BLUE
   - 4.8. GROUND CONDUCTORS – GREEN
5. SEE SHEETS 11 & 12 FOR DETAILS REGARDING ALL POWER CONDUCTORS LABELED PXX.
6. SEE SHEET 11 'HORSEPOWER RELATED COMPONENTS EQUIPMENT LIST' FOR RATINGS OF OVERCURRENT PROTECTION DEVICES.
7. SEE SHEET 6 FOR TERMINAL BLOCK DESIGNATION AND DESCRIPTIONS.

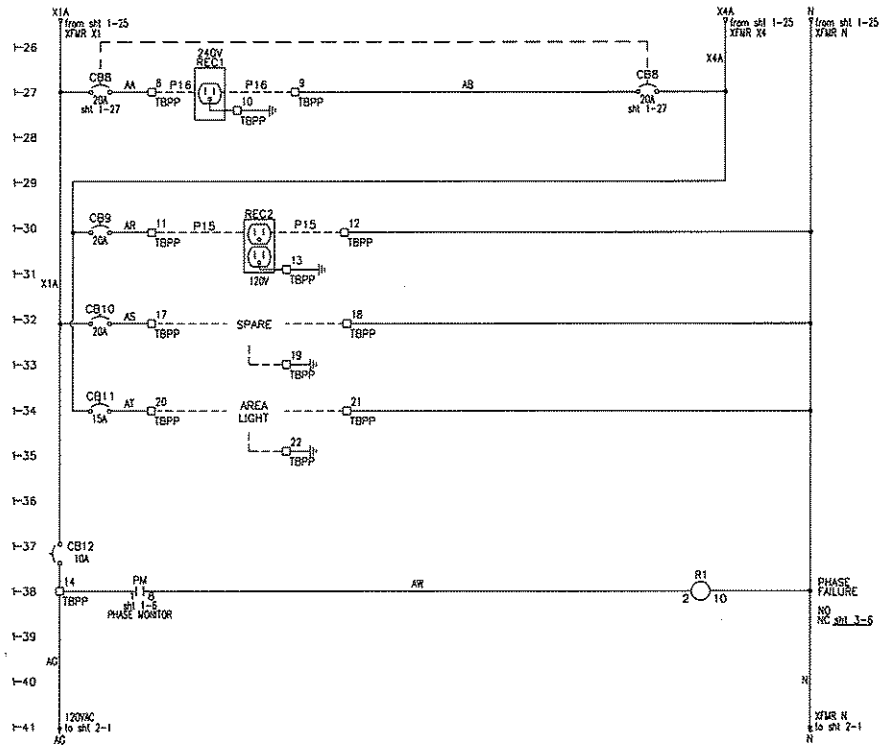

REVISIONS	BY

IMPROVEMENTS TO WASTEWATER COLLECTION SYSTEM

LIFT STATION CONSTRUCTION DETAILS

ELECTRICAL STANDARDS

FINAL SUBMITTAL

EMERALD COAST UTILITIES AUTHORITY

APPROVED BY:

Drawn	
Designed	
Checked	
Date	MAY '13
Scale	
Project No	
Sheet No.	1
	OF 18 Sheets

ALL WORK SHALL BE CONSTRUCTED IN ACCORDANCE WITH THE LATEST EDITION OF THE E.C.U.A. STANDARD SPECIFICATIONS

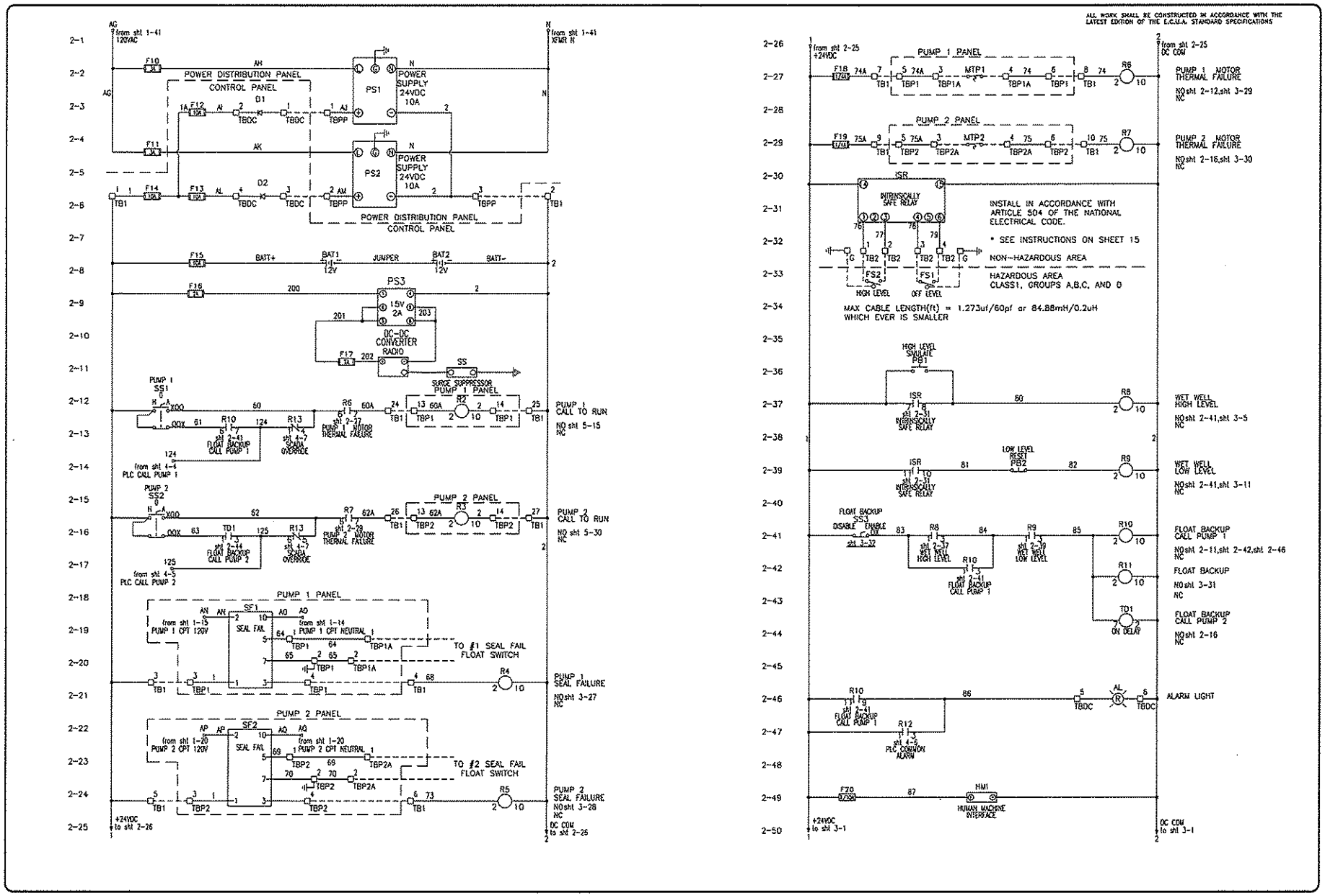

REVISIONS	BY

IMPROVEMENTS TO WASTEWATER COLLECTION SYSTEM

LIFT STATION CONSTRUCTION DETAILS

ELECTRICAL STANDARDS

FINAL SUBMITTAL

EMERALD COAST UTILITIES AUTHORITY

APPROVED BY:

Drawn	
Designed	
Checked	
Date	MAY '13
Scale	
Project No	
Sheet No.	2
	OF 18 Sheets

ALL WORK SHALL BE CONSTRUCTED IN ACCORDANCE WITH THE LATEST EDITION OF THE E.C.U.A. STANDARD SPECIFICATIONS

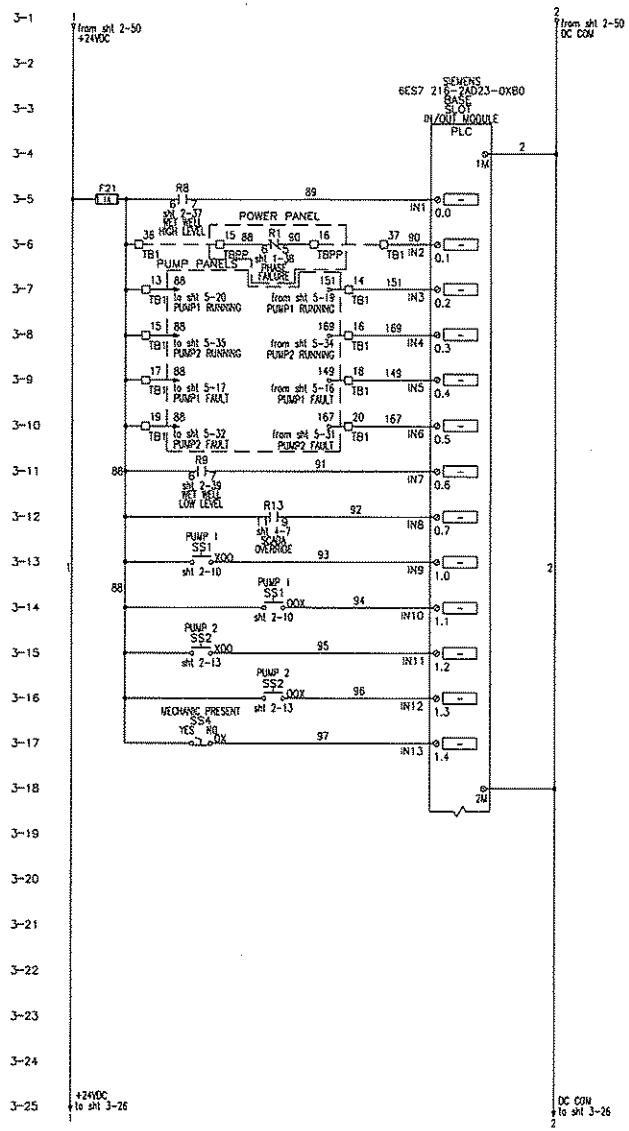

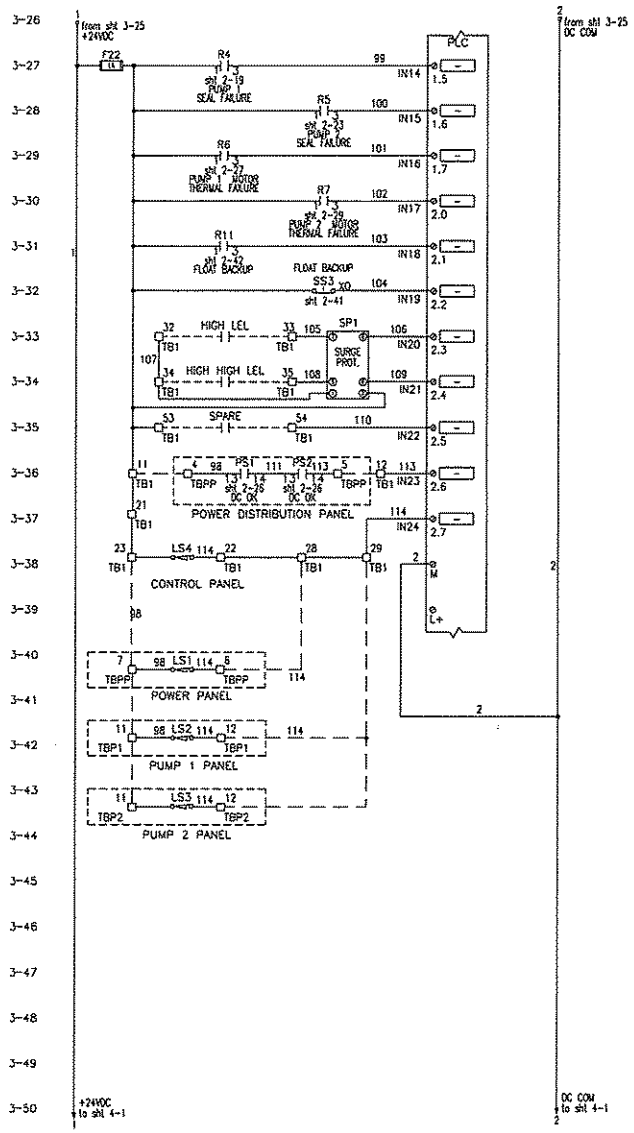

REVISIONS	BY

IMPROVEMENTS TO WASTEWATER COLLECTION SYSTEM

LIFT STATION CONSTRUCTION DETAILS

ELECTRICAL STANDARDS

FINAL SUBMITTAL

EMERALD COAST UTILITIES AUTHORITY

APPROVED BY:

Drawn	
Designed	
Checked	
Date	MAY '13
Scale	
Project No.	
Sheet No.	3
	OF 18 Sheets

ALL WORK SHALL BE CONSTRUCTED IN ACCORDANCE WITH THE LATEST EDITION OF THE E.C.U.A. STANDARD SPECIFICATIONS

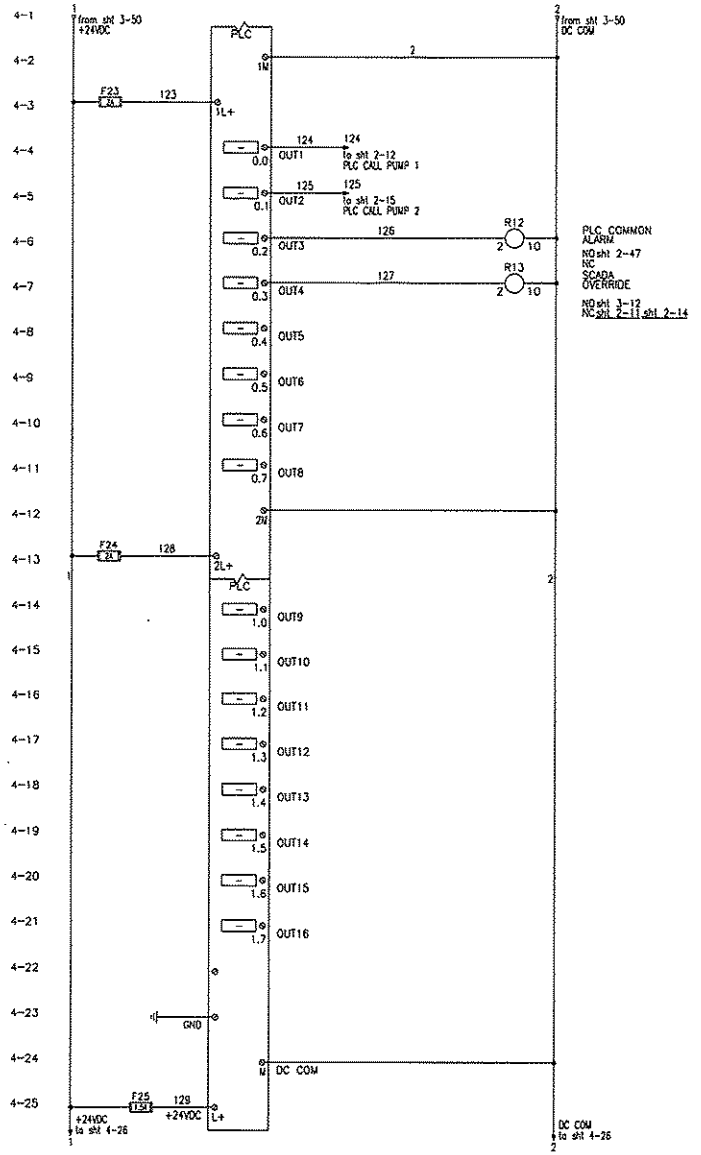

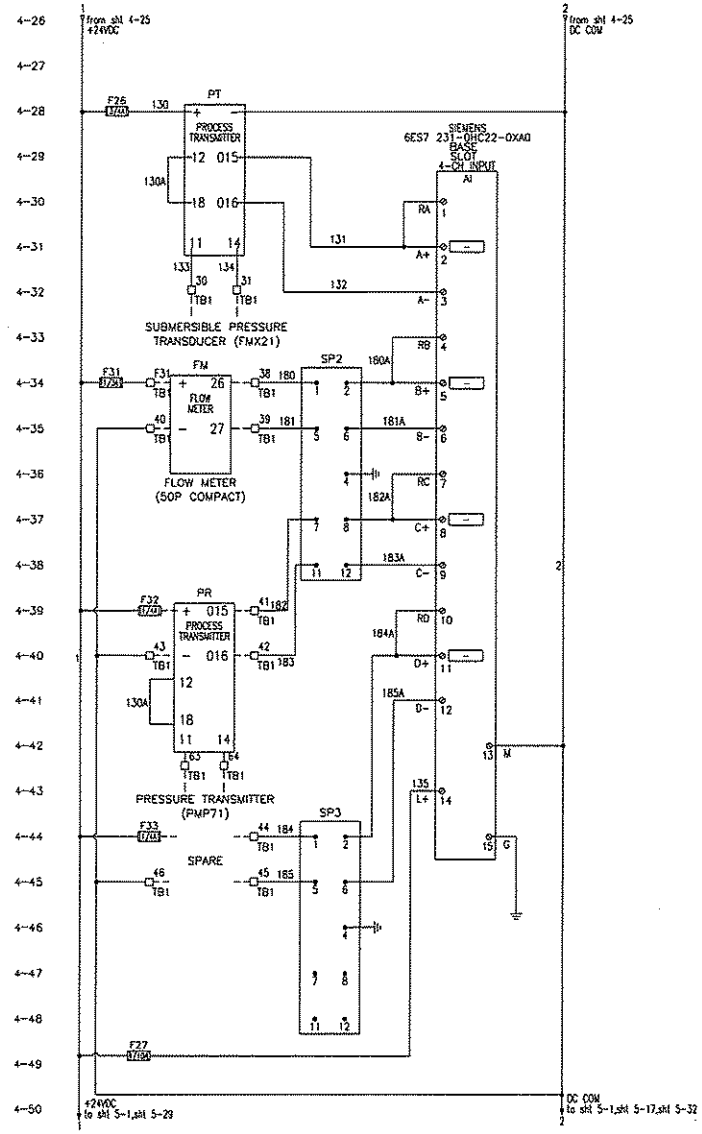

REVISIONS	BY

IMPROVEMENTS TO WASTEWATER COLLECTION SYSTEM

LIFT STATION CONSTRUCTION DETAILS

ELECTRICAL STANDARDS

FINAL SUBMITTAL

EMERALD COAST UTILITIES AUTHORITY

APPROVED BY:

Drawn	
Designed	
Checked	
Date	MAY '13
Scale	
Project No.	
Sheet No.	4
	OF 18 Sheets

ALL WORK SHALL BE CONSTRUCTED IN ACCORDANCE WITH THE LATEST EDITION OF THE E.C.U.A. STANDARD SPECIFICATIONS

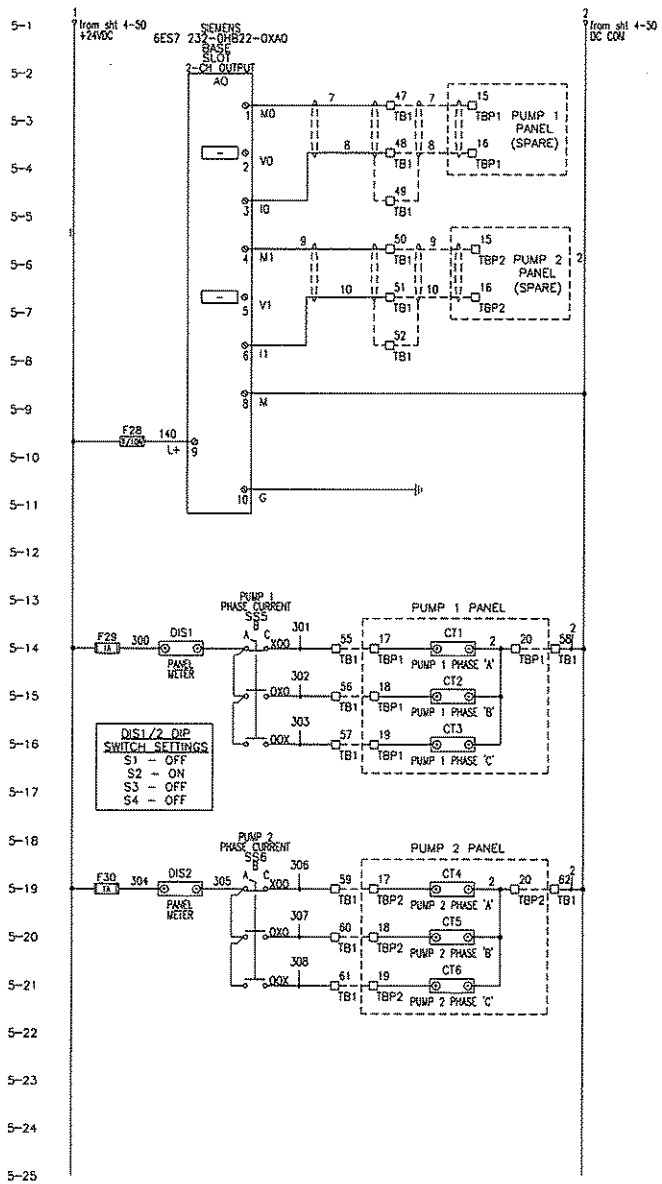

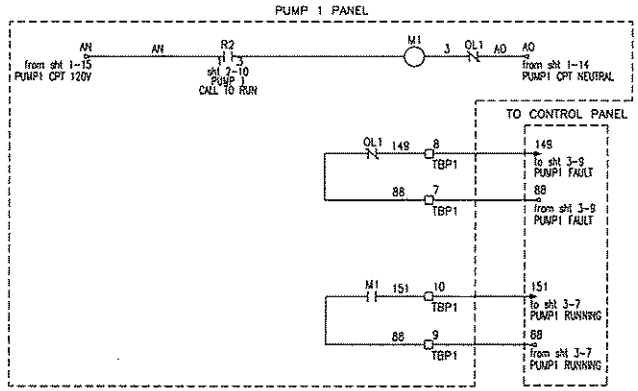

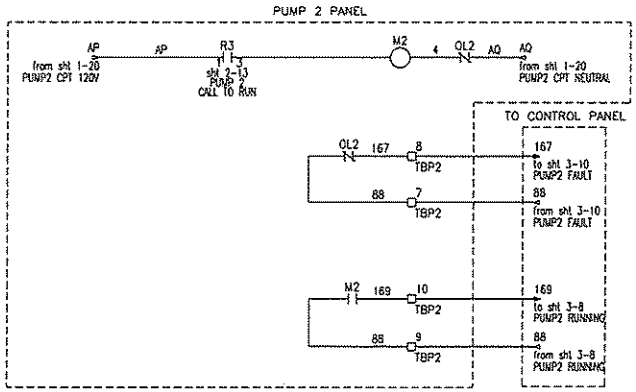

REVISIONS	BY

IMPROVEMENTS TO WASTEWATER COLLECTION SYSTEM

LIFT STATION CONSTRUCTION DETAILS

ELECTRICAL STANDARDS

FINAL SUBMITTAL

EMERALD COAST UTILITIES AUTHORITY

APPROVED BY:

Drawn:	
Designed:	
Checked:	
Date:	MAY '13
Scale:	
Project No:	
Sheet No.	5
Of 18 Sheets	

ALL WORK SHALL BE CONSTRUCTED IN ACCORDANCE WITH THE LATEST EDITION OF THE E.C.U.A. STANDARD SPECIFICATIONS

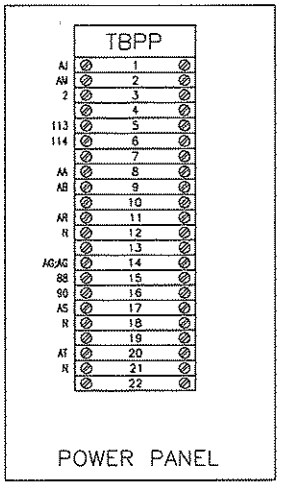

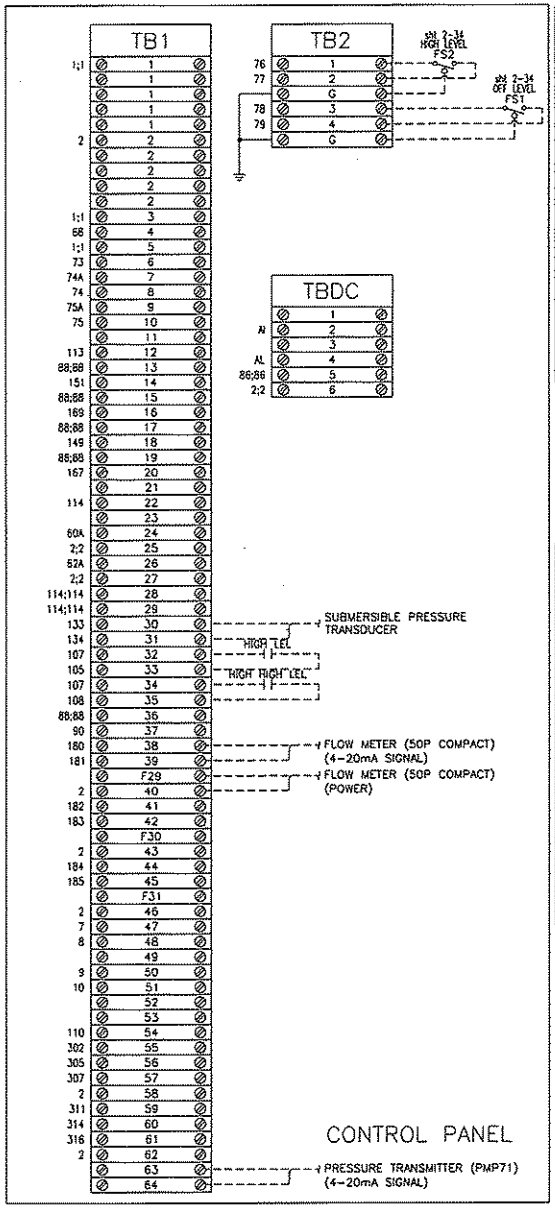

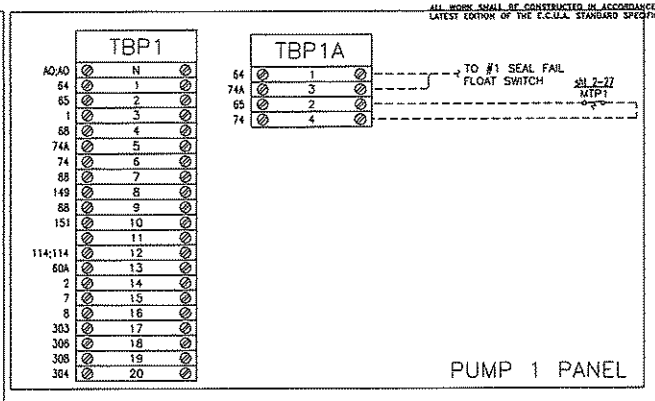

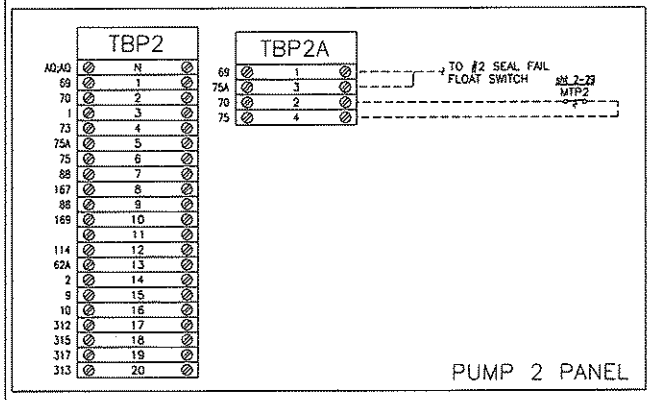

NOTES:

TERMINAL BLOCK DESIGNATIONS:

- TBPP – POWER PANEL TERMINAL BLOCK
- TB1 – CONTROL PANEL TERMINAL BLOCK
- TB2 – INTRINSICALLY SAFE TERMINAL BLOCK
- TBP1 – PUMP 1 TERMINAL BLOCK
- TBP1A – PUMP 1 TERMINAL BLOCK (MOTOR THERMAL AND SEAL FAILURE)
- TBP2 – PUMP 2 TERMINAL BLOCK
- TBP2A – PUMP 2 TERMINAL BLOCK (MOTOR THERMAL AND SEAL FAILURE)

TYPICAL FOR ALL TERMINAL BLOCKS ON THIS DRAWING

USE COPPER CONDUCTORS ONLY
75 DEG C (167 DEG F)
5.3-7.0 LB/IN TIGHTENING TORQUE

REVISIONS	BY

IMPROVEMENTS TO WASTEWATER COLLECTION SYSTEM

LIFT STATION CONSTRUCTION DETAILS

ELECTRICAL STANDARDS

FINAL SUBMITTAL

EMERALD COAST UTILITIES AUTHORITY

APPROVED BY:

Drawn	
Designed	
Checked	
Date	MAY '13
Scale	
Project No	
Sheet No.	6
	OF 18 Sheets

ALL WORK SHALL BE CONSTRUCTED IN ACCORDANCE WITH THE LATEST EDITION OF THE E.C.U.A. STANDARD SPECIFICATIONS

NOTES

1. SEE SHEET 15 FOR SCHEDULES, LEGENDS AND PANEL TAGS.

ATTENTION

THIS LAYOUT IS ONE OF TWO (2) POSSIBLE CHOICES – SEE SHEET 7A FOR THE OTHER OPTION. IF THIS LAYOUT OPTION IS SELECTED, SEE SHEET 14 FOR ASSOCIATED RACK DETAILS.

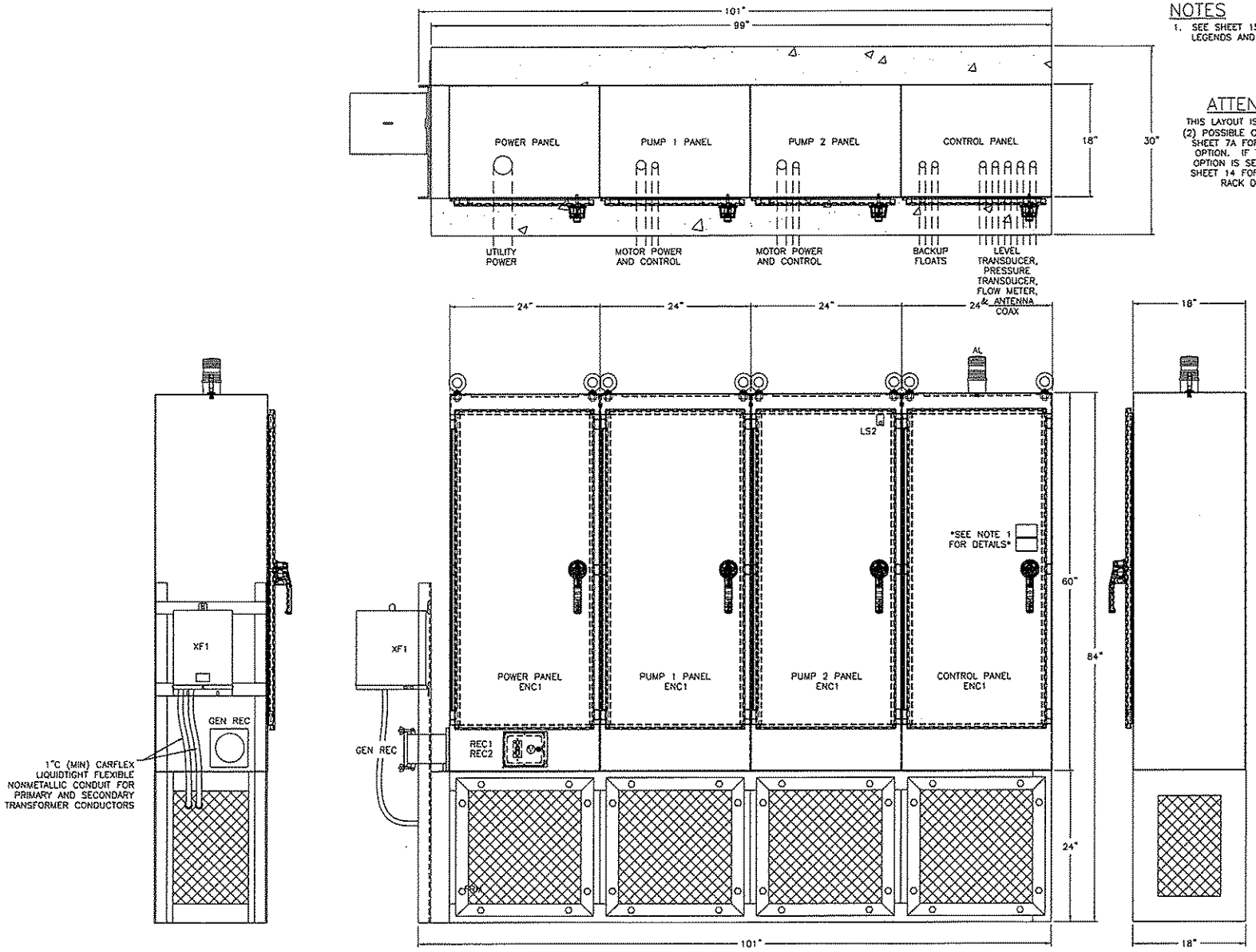

REVISIONS	BY

IMPROVEMENTS TO WASTEWATER COLLECTION SYSTEM

LIFT STATION CONSTRUCTION DETAILS

ELECTRICAL STANDARDS

FINAL SUBMITTAL

EMERALD COAST UTILITIES AUTHORITY

APPROVED BY:

Drawn	
Designed	
Checked	
Date	MAY '13
Scale:	
Project No	
Sheet No.	7
	Of 18 Sheets

ALL WORK SHALL BE CONSTRUCTED IN ACCORDANCE WITH THE LATEST EDITION OF THE E.C.U.A. STANDARD SPECIFICATIONS

NOTES

1. SEE SHEET 15 FOR SCHEDULES, LEGENDS AND PANEL TAGS.
2. LAYOUT OF THE POWER & STARTER SECTIONS DEPICTS THE LARGEST POSSIBLE HORSEPOWER CONFIGURATION.

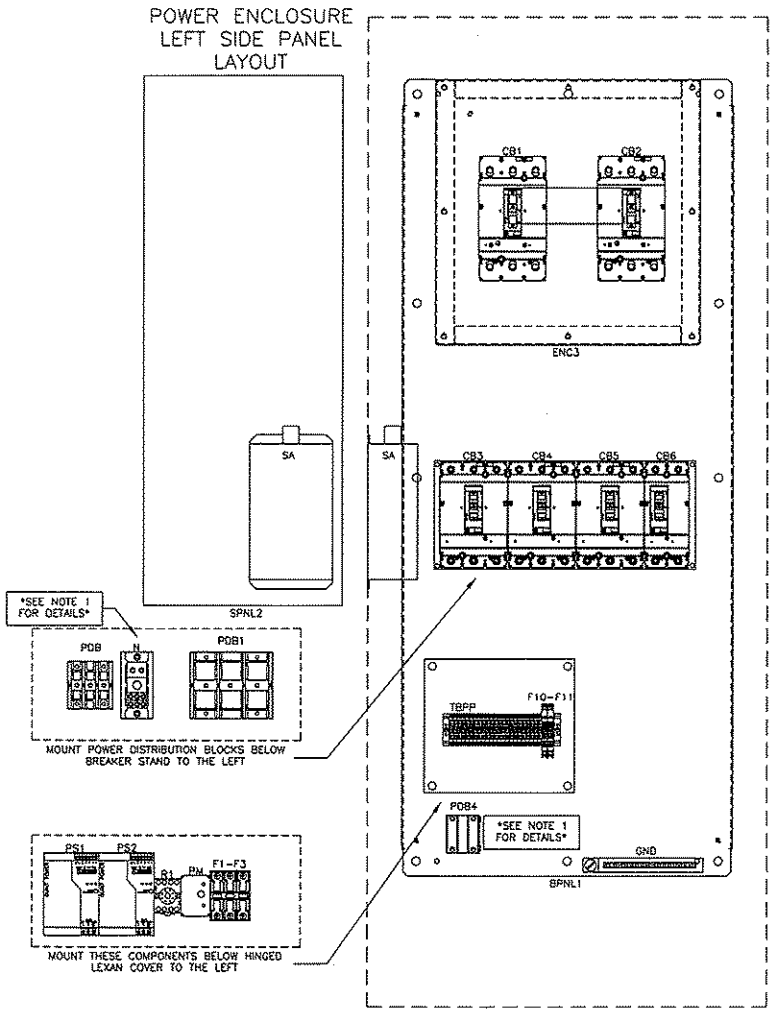

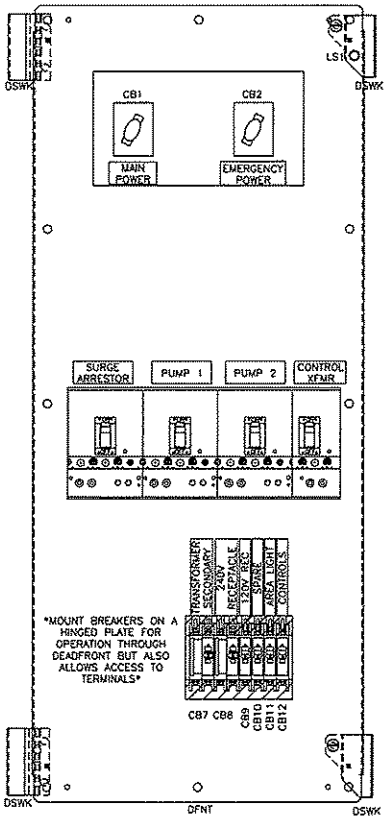

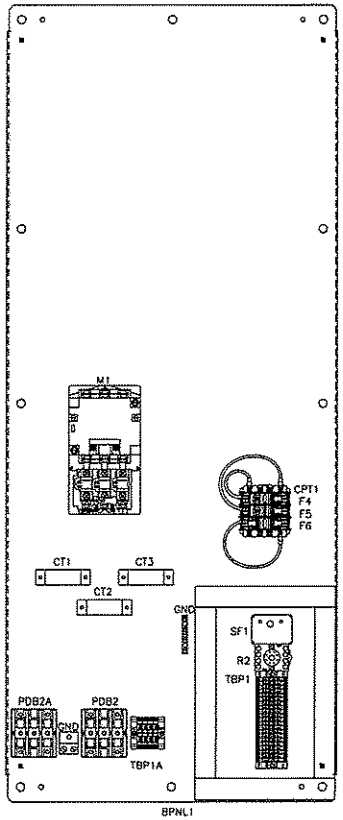

REVISIONS	BY

IMPROVEMENTS TO WASTEWATER COLLECTION SYSTEM

LIFT STATION CONSTRUCTION DETAILS

ELECTRICAL STANDARDS

FINAL SUBMITTAL

EMERALD COAST UTILITIES AUTHORITY

APPROVED BY:

Drawn	
Designed	
Checked	
Date	MAY '13
Scale	
Project No	
Sheet No.	8
OF 18 Sheets	

ALL WORK SHALL BE CONSTRUCTED IN ACCORDANCE WITH THE LATEST EDITION OF THE E.C.U.A. STANDARD SPECIFICATIONS

NOTES

1. SEE SHEET 15 FOR SCHEDULES, LEGENDS AND PANEL TAGS.
2. LAYOUT OF THE VFD SECTION DEPICTS THE LARGEST POSSIBLE HORSEPOWER CONFIGURATION.

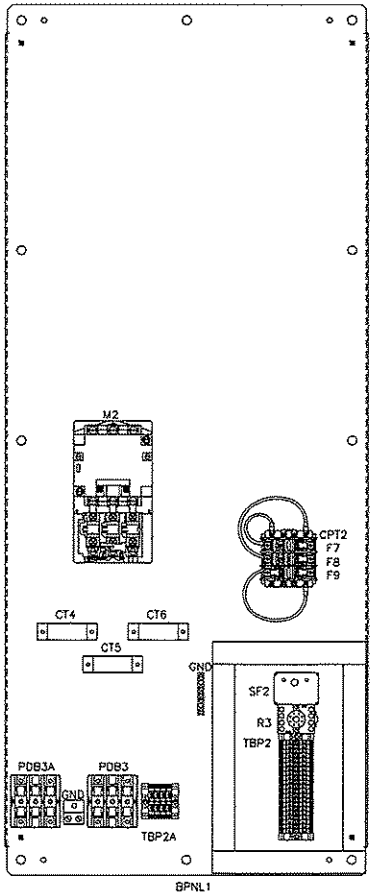

PUMP 2 ENCLOSURE BACKPANEL LAYOUT

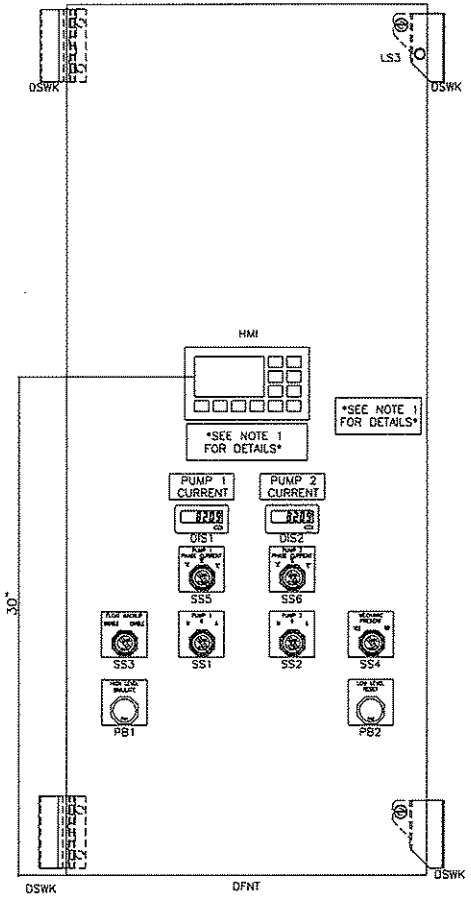

CONTROL PANEL DEADFRONT LAYOUT

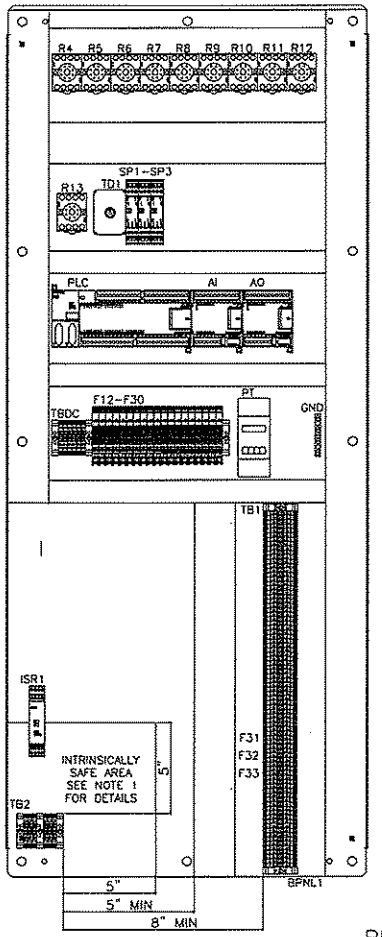

CONTROL ENCLOSURE BACKPANEL LAYOUT

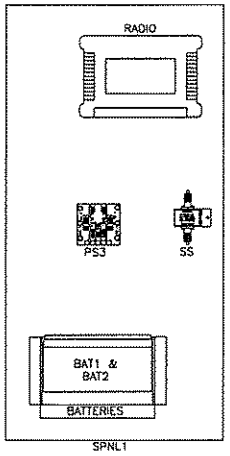

CONTROL ENCLOSURE RIGHT SIDEPANEL LAYOUT

REVISIONS	BY

IMPROVEMENTS TO WASTEWATER COLLECTION SYSTEM

LIFT STATION CONSTRUCTION DETAILS

ELECTRICAL STANDARDS

FINAL SUBMITTAL

ECUA EMERALD COAST UTILITIES AUTHORITY

APPROVED BY:

Drawn:	
Designed:	
Checked:	
Date:	MAY '13
Scale:	
Project No:	
Sheet No.	9
	OF 18 Sheets

480V FVNR Equipment List

Item	Tag	Panel	Description	Manufacturer	Model	Qty
1	ENC1	All	60X24X18 NEMA 4X SS Enclosure	Hoffman	A60241SSFSN4	4
2	BPNL1	All	60x24 Painted Steel Backpanel	Hoffman	A60P24F1	4
3	SPNL1	Control	28"H x 12"W Aluminum Sidepanel	EWS	Custom	1
4	DFNT	Power & Control	60x24 Aluminum Deadfront Panel	EWS	Custom	2
5	DSWK	Power & Control	Door Swing Kit	Hoffman	ANADFK	2
6	FRM	All	Expanded Metal Stainless Steel Frame	EWS	SEE DRAWINGS	1
7	PDB	Power	Incoming Power Distribution Block PDB Cover	Square D	9080LBA362101	1
8	PDB	Power	Incoming Power Distribution Block PDB Cover	Square D	9080LB23	1
9	GND	Power	Power Panel Ground Bar	Square D	PK15GTA-L	1
10	ENC3	Power	16"H x 16"W x 8"D Screw Cover Type 3R Enclosure	Hoffman	A16168SC	1
11	CB1	Power	600V Main Circuit Breaker	Square D	SEE HP TABLE SHEET 11	1
12	CB2	Power	600V Emergency Circuit Breaker	Square D	SEE HP TABLE SHEET 11	1
13	CB1,CB2	Power	Mechanical Interlock for H/J Frame Circuit Breakers	Square D	S29369	1
14	CB1,CB2	Power	Door Mounted Rotary Handle for H/J Frame Circuit Breakers	Square D	S29338	2
15	GEN REC	Power	NEMA 4X Generator Receptacle	Appleton	ADR1044-RS	1
16	GEN REC	Power	NEMA 4X Generator Plug (Ship Loose)	Appleton	ACP1044CD-RS	1
17	PDB1	Power	Main Power Distribution Block PDB1	Square D	9080LBA363208	1
18	PDB1	Power	Main Power Distribution Block PDB1 Cover	Square D	9080LB33	1
19	F1-F3	Power	3 Pole Rejection type Fuse Block	Bussmann	BC6033PQ	1
20	F1-F3	Power	1A Rejection Type Fuse, Class CC	Bussmann	KTK-R-1	3
21	F1-F3	Power	Fuse Cover	Bussmann	SAMI-7N	3
22	PM	Power	480V Phase Monitor	Timemark	A257B	1
23	PM	Power	480V, 8-Pin Relay Base	ABB	OT08PC	1
24	CB3-CB6	Power	Breaker Stand	EWS	Custom	1
25	CB3	Power	30A 480V 3 Pole Circuit Breaker, Main Surge Arrestor	Square D	HDL36030	1
26	SA	Power	Main Surge Arrestor	SSI	SDLA3N4	1
27	CB4, CB5	Power	600V 3 Pole Circuit Breaker, Starter	Square D	SEE HP TABLE SHEET 11	2
28	CB4, CB5	Power	H & J Frame Circuit Breaker Locking System	Square D	S29371	2
29	PDB2A, PDB3A	Pump 1 & 2	Starter Power Distribution Block	Square D	9080LBA362104	2
30	PDB2A, PDB3A	Pump 1 & 2	Starter Power Distribution Block Cover	Square D	9080LB23	2
31	M1, M2	Pump 1 & 2	NEMA Starter	Square D	SEE HP TABLE SHEET 11	2
32	OL1, OL2	Pump 1 & 2	Overload Heaters	Square D	SEE HP TABLE SHEET 11	2
33	OL1, OL2	Pump 1 & 2	Overload Contact, (2) N.C.	Square D	9999-SOS	2
34	GND	Pump 1 & 2	Motor Ground Lug	NSI	2-GT	2
35	PDB2, PDB3	Pump 1, 2 & Control	Motor Power Distribution Block PDB2&3, (1)#14-2/0.....(1)#14-2/0	Square D	9080LBA362101	2
36	PDB2, PDB3	Pump 1 & 2	Motor Power Distribution Block PDB2&3 Cover	Square D	9080LB23	2
37	F4, F5, F7, F8	Pump 1 & 2	1/2A Rejection Type Fuse, VFD CPT Primary	Bussmann	FNQ-R-1/2	4
38	CPT1, CPT2	Pump 1 & 2	480/120V 100VA Transformer	Square D	9070TF100D1	2
39	CPT1, CPT2	Pump 1 & 2	Transformer Finger Safe Cover, VFD CPT Primary	Square D	9070FSC-1	2
40	CPT1, CPT2	Pump 1 & 2	Fuse Puller, VFD CPT	Square D	9070FP-1	2
41	F6, F9	Pump 1 & 2	1-1/4A Fuse, VFD CPT Secondary	Bussmann	FNQ-1-1/4	2
42	CB6	Power	25A 480V 2 Pole Circuit Breaker, XF1 Transformer Primary	Square D	HDL26025	1
43	XF1	Power	5kVA 480V/240-120V Transformer, NEMA 3R Stainless Steel	Square D	551FSS	1
44	CB7-CB11	Power	Hinged Aluminum Bracked for Mounting 240/120V Circuit Breakers through Deadfront	EWS	Custom	1
45	CB7	Power	30A 240/120V 2 Pole Circuit Breaker, XF1 Transformer Secondary	Square D	QOU230	1
46	PDB4	Power	240V/120V Power Distribution Block PDB4, (1) #14-2 ... (4) #18-10	Square D	9080LBA361104	1
47	CB8	Power	20A, 240V, 2 Pole Circuit Breaker	Square D	QOU220	1
48	REC1	Power	20A, 250V, 6-20R Receptacle	P&S	5872I	1
49	CB9, CB10	Power	20A, 120V 1 Pole Circuit Breaker	Square D	QOU120	2
50	REC2	Power	120V 20A GFCI Duplex Receptacle NEMA5-20R	P&S	2094-I	1
51	REC1, REC2	Power	Custom Receptacle Cover NEMA 4X S.S.	HOFFMAN	HIORPSS-MOD	1
52	REC1, REC2	Power	3/4 1G AL FD BOX	Appelton	4CS-1/2	2
53	CB11	Power	15A, 120V, 1 Pole Circuit Breaker	Square D	QOU115	1
54	CB12	Power	10A, 120V, 1 Pole Circuit Breaker	Square D	QOU110	1
55	R1	Power	120V 3PDT General Purpose Relay w/ Indicator Lamp	Potter Brumfield	KRPA-14AN-120	1
56	R1-R13, SF1, SF2	All	11 Pin Relay Base	ABB	ND5-11	15
57	F10, F11	Power	Fused Terminal Block w/ 120V Blown Fuse Indication	Allen Bradley	1492-H4	2
58	-	Power & Control	1492-H4 &H5 Fused Terminal Block End Cover	Allen Bradley	1492-N37	2
59	F10, F11	Power	3A Fuse	Bussmann	AGC-3	2
60	PS1, PS2	Power	10A 24VDC Power Supply	Phoenix Contact	2938604	2
61	D1, D2	Power	10A Diode, P1000A	Newark	51R7094	2
62	-	Power	Custom Stand/Lexan Hinged Cover w/Alum Stand for TBPP & Power Supply Fuses	EWS	Custom	1
63	F12-F30	Control	Fused Terminal Block w/ 24VDC Blown Fuse Indication	Allen Bradley	1492-H5	19
64	F12-F15	Control	10A Fuse	Bussmann	AGC-10	4
65	BAT1, BAT2	Control	12VDC Battery	Power Sonic	PS1290	2

480V FVNR Equipment List

ALL WORK SHALL BE CONSTRUCTED IN ACCORDANCE WITH THE LATEST EDITION OF E.C.U.A. STANDARD SPECIFICATIONS

Item	Tag	Panel	Description	Manufacturer	Model	Qty
66	PS3	Control	24VDC-15VDC Converter, 2A	Vicor	V1-J12-EY-B1	1
67	RADIO	Control	400MHz Radio	GE MDS	SD04MD	1
68	RADIO	Control	DB9 Male/Male Gender Changer	Office Depot	946660	1
69	RADIO/SS	Control	3 Foot LMR400UF Coaxial Jumper NMale to TNCMale	Tessco	324503	1
70	SS	Control	Coaxial Surge Suppressor, 50-700MHz	Polyphaser	IS-50NX-C1	1
71	-	-	50FT Coaxial Cable, NMale-Nmale, Wireless Solutions 400-07-07-P50 (Ship Loose)	Tessco	370875	1
72	-	-	400MHz Yagi Antenna w/ N Female Connectter, MAXRAD MYA4506N (Ship Loose)	Tessci	37634	1
73	-	-	Antenna Tower 5' Base Section, ROHN R-5825G5 (Ship Loose)	Tessco	64559	1
74	-	-	Antenna Tower 10' Mid Section, ROHN R-25G (Ship Loose)	Tessco	56866	1
75	-	-	Antenna Tower 9' Top Section, ROHN R-25AG2 (Ship Loose)	Tessco	70080	1
76	-	-	21' 1-1/4" S.S. Antenna Mast (Ship Loose)	Bell Steel	023008	1
77	F18, F19	Control	1/4A Fuse	Bussmann	AGC-1/4	2
78	F16, F17, F23, F24	Control	2A Fuse	Bussmann	AGC-2	4
79	SS1, SS2	Control	3 Position Selector Switch, 30MM	Square D	9001SK543BH2	2
80	R2-R13	Control	24VDC 3PDT General Purpose Relay w/ Indicator Lamp	Potter Brumfield	KRPA-14AN-24	12
81	SF1, SF2	Control	120V Seal Failure Relay	ATC	SPM-120-AAA-10K	2
82	ISR1	Control	Intrinsically Safe Barrier Relay, 24VDC	Pepperl & Fuchs	KFD2-SR2-Ex2.W	1
83	TB2	Control	Terminal Block, Blue TB2	Phoenix Contact	3044115	4
84	TB2	Control	Terminal Block, Blue End Barrier, TB2	Phoenix Contact	3047235	1
85	TB2	Control	Ground Terminal Blocks, TB2	Phoenix Contact	3044128	2
86	PB1, PB2	Control	Push Button, Black 1NO 1NC	Square D	9001SKR1BH13	2
87	SS3, SS4	Control	2 Position Selector Switch, 30MM	Square D	9001SK511BH2	2
88	TD1	Control	24VDC 0-180 Second Time Delay Relay	Square D	RE48ATM12MW	1
89	TD1	Control	8 Pin Relay Base	ABB	ND5-S	1
90	AL	Control	24VDC Red Alarm Light	Federal Signal	LP3M-012-048R	1
91	F20, F27, F28	Control	1/10A Fuse	Bussmann	AGC-1/10	3
92	HMI	Control	TD400C Text Display	Siemens	6AV6 640-0AA00-0AX1	1
93	F21, F22, F29, F30	Control	1A Fuse	Bussmann	AGC-1	4
94	PLC	Control	S7-200 Dual Com Port Processor w/ 24 DI & 16 DO Points	Siemens	6ES7 216-2AD23-0XB0	1
95	AI	Control	S7-200 4 Point AI Module	Siemens	6ES7 231-0HC22-0XA0	1
96	AO	Control	S7-200 2 Point AO Moduel	Siemens	6ES7 232-0HB22-0XA0	1
97	PLC	Control	S7-200 Communication cable PC/PPI RS-232/485	Siemens	6ES7 901-3CB30-0XA0	1
98	SP1-SP3	Control	Plug In DI Surge Suppression, PT 4x1...DC	Phoenix Contact	2838322	3
99	SP1-SP3	Control	Terminal Block Base for Plugable Surge Supression, PT 4x1-BE	Phoenix Contact	2839363	3
100	LS1-LS4	Control	Panel Intrusion Switches, N.C. Contacts	NSI	76030PS	4
101	F25	Control	1-1/2A Fuse, PLC Supply	Bussmann	AGC-1-1/2	1
102	F26	Control	3/4A Fuse, Process Analyzer	Bussmann	AGC-3/4	1
103	PT	Control	Level Transmitter	Endress & Hauser	RMA42AAAN2	2
104	PT	-	Submersible Level Transducer, 20ft Range w/ 60ft Cable & Mounting Clamp (Ship Loose)	Endress & Hauser	FMX21-FE221GGE21APO	1
105	F31-F33	Control	24VDC Fused Terminal Block With Indication	Phoenix Contact	3046090	3
106	F31-F33	Control	1/4A Fuse, Analog Inputs	Bussmann	GMA-250	3
107	TBPP,1,DC,P1, 1A, P2 & 2A	All	Terminal Block, Gray 26-10 AWG Wire	Phoenix Contact	3044102	181
108	TBPP,1,DC,P1, 1A, P2 & 2A	All	Terminal Block End Barrier	Phoenix Contact	3047028	8
109	TBPP,1,DC,P1, 1A, P2 & 2A	All	Terminal Block End Anchor	Phoenix Contact	0800886	17
110	TBP1A, TBP2A	Pump 1 & 2	Terminal Block, Gray 26-8 AWG Wire, TBVFD1A & TBVFD2A	Phoenix Contact	3044131	8
111	GND	Control	Control Panel Ground Bar	Square D	PK5GTA	1
112	-	-	Meter Socket (SHIP LOOSE)	Milbank	UAP970J-RRL	1
113	-	-	Stainless Steel 60' Float (SHIP LOOSE)	Anchor Scientific	P60NO-SST	2
114	-	-	Insulated Ground Neutral (SHIP LOOSE)	Square D	SN400LA	1
115	-	-	Ground Bar Kit (SHIP LOOSE)	Square D	PKDGT250	1
116	-	-	NEMA 4A S.S. Disconnect (SHIP LOOSE)	Square D	J250DS	1
117	-	-	Antenna Mast Stabilitation Plate (Ship Loose)	EWS	Custom	1
118	-	-	Stainless Steel 'U' Bolt, 2" Pole, 5/16" Diameter Bolt w/ 2-1/2" Threads (SHIP LOOSE)			1
119	-	-	5/16" Stainless Steel Flat Washer for 'U' Bolt (SHIP LOOSE)			2
120	-	-	5/16" Stainless Steel Lock Washer for 'U' Bolt (SHIP LOOSE)			2
121	-	-	5/16" Stainless Steel Nut for 'U' Bolt (SHIP LOOSE)			2
122	-	-	Stainless Steel 'U' Bolt, 1/4" Diameter (SHIP LOOSE)			2
123	-	-	1/4" Stainless Steel 1/4" Nut for 'U' Bolt (SHIP LOOSE)			4
124	-	-	1-1/4" Reduction Bushing for Antenna Tower, ROHN R-TB50 (SHIP LOOSE)	Tessco	36882	1
125	PLC	Control	S7-200 Memory Module	Siemens	6ES7 2918GF230AX0	1
126	N	Power	Generator Neutral Block, (1)#6-400kcmil ... (6)#14-2	Square D	9080LBA163106	1
127	N	Power	Generator Neutral Block Cover	Square D	9080LB31	1
128	SPNL2	Power	32"X12" Aluminum Sidepanel	EWS	Custom	1
129	CT1-CT6	Pump 1 & 2	Current Transducer; 4-20mA; 10, 20 or 50A Range; Loop Powered	NK Technologies	AT1-420-24L-FF	6
130	DIS1, DIS2	Control	4 Digit Loop Powered Process Indicator; 4-20mA	Red Lion	CUB4LP40	2
131	SS5, SS6	Control	3 Position Selector Switch, 30MM	Square D	9001SK546BH2	2
132	FM	Control	Flow Meter	Endress & Hauser	50P Compact	1
133	PR	Control	Pressure Transmitter	Endress & Hauser	PMP71-AAC1PG1RAA	1

REVISIONS	BY

IMPROVEMENTS TO WASTEWATER COLLECTION SYSTEM

LIFT STATION CONSTRUCTION DETAILS

ELECTRICAL STANDARDS

FINAL SUBMITTAL

EMERALD COAST UTILITIES AUTHORITY

APPROVED BY:

Drawn	
Designed	
Checked	
Date	MAY '13
Scale:	
Project No:	
Sheet No.	10
	OF 18 Sheets

ALL WORK SHALL BE CONSTRUCTED IN ACCORDANCE WITH THE LATEST EDITION OF THE E.C.U.A. STANDARD SPECIFICATIONS

Horsepower Related Compontents Equipment List								
Item	Tag	Horsepower						
		1	2	3	5	7.5	10	15
Main Circuit Breaker	CB1	HDL36030	HDL36030	HDL36030	HDL36040	HDL36045	HDL36050	HDL36080
Emergency Circuit Breaker	CB2	HDL36030	HDL36030	HDL36030	HDL36040	HDL36045	HDL36050	HDL36080
Starter Circuit Breaker	CB4,CB5	HDL36015	HDL36015	HDL36015	HDL36015	HDL36020	HDL36025	HDL36040
480V 3 Phase FVNR Starter	M1, M2	8536SAO12V02	8536SAO12V02	8536SBO12V02	8536SBO12V02	8536SCO12V02	8536SCO12V02	8536SDO12V02
Overloads	OL1, OL2	B3.00	B4.85	B6.90	B11.5	B17.5	B25	B32

Horsepower Related Power Conductors, CGB's and Hubs								
Conductor Tag		Horsepower						
		1	2	3	5	7.5	10	15
P-01, P-03 & P-04	Description	(3)#10	(3)#10	(3)#10	(3)#8	(3)#8	(3)#8	(3)#4
	Manufacturer	N/A	N/A	N/A	N/A	N/A	N/A	N/A
	Catalog #	N/A	N/A	N/A	N/A	N/A	N/A	N/A
	Length (Max Ft)	N/A	N/A	N/A	N/A	N/A	N/A	N/A
	Cable Dia (in)	0.164"	0.164"	0.164"	0.216"	0.216"	0.216"	0.324"
	Appleton Connector	(3) -CG-1275	(3) -CG-1275	(3) -CG-1275	(3) -CG-1850	(3) -CG-1850	(3) -CG-1850	(3) -CG-3150
	Connector Range	0.125"-0.250"	0.125"-0.250"	0.125"-0.250"	0.187"-0.312"	0.187"-0.312"	0.187"-0.312"	0.312"-0.437"
	Meyers Hub	(3) 3/4" - STA-2	(3) 3/4" - STA-2	(3) 3/4" - STA-2	(3) 1/2" - STA-1	(3) 1/2" - STA-1	(3) 1/2" - STA-1	(3) 1/2" - STA-1
P-02A	Description	(1)#10	(1)#10	(1)#10	(1)#10	(1)#10	(1)#10	(1)#8
	Manufacturer	N/A	N/A	N/A	N/A	N/A	N/A	N/A
	Catalog #	N/A	N/A	N/A	N/A	N/A	N/A	N/A
	Length (Max Ft)	N/A	N/A	N/A	N/A	N/A	N/A	N/A
	Cable Dia (in)	0.164"	0.164"	0.164"	0.164"	0.164"	0.164"	0.216"
	Appleton Connector	(1)-GC-1250	(1)-GC-1250	(1)-GC-1250	(1)-GC-1250	(1)-GC-1250	(1)-GC-1250	(1)-GC-1850
	Connector Range	0.125"-0.187"	0.125"-0.187"	0.125"-0.187"	0.125"-0.187"	0.125"-0.187"	0.125"-0.187"	0.187"-0.312"
	Hub	(1) 1/2" - STA-1	(1) 1/2" - STA-1	(1) 1/2" - STA-1	(1) 1/2" - STA-1	(1) 1/2" - STA-1	(1) 1/2" - STA-1	(1) 1/2" - STA-1
P-02B	Description	(1)#10	(1)#10	(1)#10	(1)#10	(1)#10	(1)#10	(1)#8
	Manufacturer	Southwire	Southwire	Southwire	Southwire	Southwire	Southwire	Southwire
P-05 & P-06	Description	(3)#10	(3)#10	(3)#10	(3)#8	(3)#8	(3)#8	(3)#4
	Manufacturer	Southwire	Southwire	Southwire	Southwire	Southwire	Southwire	Southwire
	Catalog #	N/A	N/A	N/A	N/A	N/A	N/A	N/A
	Length (Max Ft)	N/A	N/A	N/A	N/A	N/A	N/A	N/A
	Cable Dia (in)	0.164"	0.164"	0.164"	0.216"	0.216"	0.216"	0.324"
	Appleton Connector	(3) -CG-1275	(3) -CG-1275	(3) -CG-1275	(3) -CG-1850	(3) -CG-1850	(3) -CG-1850	(3) -CG-3150
	Connector Range	0.125"-0.250"	0.125"-0.250"	0.125"-0.250"	0.187"-0.312"	0.187"-0.312"	0.187"-0.312"	0.312"-0.437"
	Hub	(3) 3/4" - STA-2	(3) 3/4" - STA-2	(3) 3/4" - STA-2	(3) 1/2" - STA-1	(3) 1/2" - STA-1	(3) 1/2" - STA-1	(3) 1/2" - STA-1
P-07 & P-09	Description	(3)#14 W/G, TC	(3)#14 W/G, TC	(3)#14 W/G, TC	(3)#14 W/G, TC	(3)#14 W/G, TC	(3)#14 W/G, TC	(3)#10 W/G, TC
	Manufacturer	Houston Wire	Houston Wire	Houston Wire	Houston Wire	Houston Wire	Houston Wire	Houston Wire
	Catalog #	HW151 1403G	HW151 1403G	HW151 1403G	HW151 1403G	HW151 1403G	HW151 1403G	HW151 1003G
	Length (Max Ft)	19 FT	19 FT	19 FT	19 FT	19 FT	19 FT	19 FT
	Cable Dia (in)	0.364"	0.364"	0.364"	0.364"	0.364"	0.364"	0.447"
	Appleton Connector	(2) -CG-3150	(2) -CG-3150	(2) -CG-3150	(2) -CG-3150	(2) -CG-3150	(2) -CG-3150	(2) -CG-3750
	Connector Range	0.312"-0.437"	0.312"-0.437"	0.312"-0.437"	0.312"-0.437"	0.312"-0.437"	0.312"-0.437"	0.375"-0.500"
	Hub	(2) 1/2" - STA-1	(2) 1/2" - STA-1	(2) 1/2" - STA-1	(2) 1/2" - STA-1	(2) 1/2" - STA-1	(2) 1/2" - STA-1	(2) 1/2" - STA-1
P-08 & P-10	Description	(3)#14	(3)#14	(3)#14	(3)#14	(3)#14	(3)#14	(3)#10
	Manufacturer	Southwire	Southwire	Southwire	Southwire	Southwire	Southwire	Southwire

REVISIONS	BY

IMPROVEMENTS TO WASTEWATER COLLECTION SYSTEM

LIFT STATION CONSTRUCTION DETAILS

ELECTRICAL STANDARDS

FINAL SUBMITTAL

ECUA
EMERALD COAST UTILITIES AUTHORITY

APPROVED BY:

Drawn:
Designed:
Checked:
Date: MAY '13
Scale:
Project No:
Sheet No. 11
OF 18 Sheets

ALL WORK SHALL BE CONSTRUCTED IN ACCORDANCE WITH THE LATEST EDITION OF THE E.C.U.A. STANDARD SPECIFICATIONS

Power & Control Conductors, CGB's and Hubs

Cable Number	Description	Manufacturer	Catalog Numer	Length (Max Ft)	Cable Diameter	Appleton Liquidtight Cable Connector	Connector Cable Range	Crouse-Hinds Myers Hub	From Panel/Enclosure	To Panel/Enclosure
P-13	(3)#8 AWG W/GND, Tray Cable	Houston Wire & Cable	HW 154 00803	6 FT	0.58"	(1) - CG-5075	0.500"-0.625"	(1) 3/4" - STA-2	Power Panel	480/240-120V Transformer
P-14	(3)#6 AWG W/GND, Tray Cable	Houston Wire & Cable	HW 154 00603	6 FT	0.69"	(1) - CG-6275	0.625"-0.750"	(1) 3/4" - STA-2	480/240-120V Transformer	Power Panel
P-15	3-1/C #12 AWG	N/A	N/A	AS REQ'D	N/A	N/A	N/A	N/A	Power Panel	Power Panel
P-16	3-1/C #12 AWG	N/A	N/A	AS REQ'D	N/A	N/A	N/A	N/A	Power Panel	Power Panel
C-01	(16) #14 AWG, Tray Cable	Houston Wire & Cable	HW 151 01416	24 FT	0.68"	(2) - CG-6275	0.625"-0.750"	(2) 3/4" - STA-2	Power Panel	Control Panel
C-02	(5) #14 AWG, Tray Cable	Houston Wire & Cable	HW 151 01405	19 FT	0.41"	(2) - CG-3750	0.375"-0.500"	(2) 1/2" - STA-1	Control Panel	Pump 1 Panel
C-03	(16) #14 AWG, Tray Cable	Houston Wire & Cable	HW 151 01416	22 FT	0.68"	(2) - CG-6275	0.625"-0.750"	(2) 3/4" - STA-2	Control Panel	Pump 2 Panel
C-04	1 Pair #16 SH, Tray Cable	Houston Wire & Cable	HW 120 01601	22 FT	0.33"	(2) - CG-2575	0.250"-0.375"	(2) 3/4" - STA-2	Pump 1 Panel	Control Panel
C-05	1 Pair #16 SH, Tray Cable	Houston Wire & Cable	HW 120 01601	19 FT	0.33"	(2) - CG-2575	0.250"-0.375"	(2) 3/4" - STA-2	Pump 2 Panel	Control Panel
PUMP 1-PWR	Per Mfg Specs	N/A	N/A	N/A	N/A	CG Series based on Mfg Specs	N/A	STA Series based on Mfg Specs	Field (Pump 1)	Pump 1 Panel
PUMP 1-MTP	Per Mfg Specs	N/A	N/A	N/A	N/A	CG Series based on Mfg Specs	N/A	STA Series based on Mfg Specs	Field (Pump 1)	Pump 1 Panel
PUMP 1-SF	Per Mfg Specs	N/A	N/A	N/A	N/A	CG Series based on Mfg Specs	N/A	STA Series based on Mfg Specs	Field (Pump 1)	Pump 1 Panel
PUMP 2-PWR	Per Mfg Specs	N/A	N/A	N/A	N/A	CG Series based on Mfg Specs	N/A	STA Series based on Mfg Specs	Field (Pump 2)	Pump 2 Panel
PUMP 2-MTP	Per Mfg Specs	N/A	N/A	N/A	N/A	CG Series based on Mfg Specs	N/A	STA Series based on Mfg Specs	Field (Pump 2)	Pump 2 Panel
PUMP 2-SF	Per Mfg Specs	N/A	N/A	N/A	N/A	CG Series based on Mfg Specs	N/A	STA Series based on Mfg Specs	Field (Pump 2)	Pump 2 Panel
Float Switch 1	Float Switch Cable	BY OTHERS	N/A	N/A	0.56"	(1) - CG-5050	0.500"-0.625"	(1) 1/2" - STA-1	Field (Float Switch)	Control Panel
Float Switch 2	Float Switch Cable	BY OTHERS	N/A	N/A	0.56"	(1) - CG-5050	0.500"-0.625"	(1) 1/2" - STA-1	Field (Float Switch)	Control Panel
Pressure Xducer	Pressure Transducer Cable	BY OTHERS	N/A	N/A	0.35"	(1) - G-3150	0.312"-0.437"	(1) 1/2" - STA-1	Field (Float Switch)	Control Panel
Antenna COAX	Coaxial Cable	BY OTHERS	N/A	N/A	0.408"	(1) - CG-3750	0.375"-0.500"	(1) 1/2" - STA-1	Field (Antenna)	Control Panel

REVISIONS	BY

IMPROVEMENTS TO WASTEWATER COLLECTION SYSTEM

LIFT STATION CONSTRUCTION DETAILS

ELECTRICAL STANDARDS

FINAL SUBMITTAL

EMERALD COAST UTILITIES AUTHORITY

APPROVED BY:

Drawn:
Designed:
Checked:
Date: MAY '13
Scale:
Project No:
Sheet No. 12
OF 18 Sheets

ALL WORK SHALL BE CONSTRUCTED IN ACCORDANCE WITH THE LATEST EDITION OF THE E.C.U.A. STANDARD SPECIFICATIONS

NOTES:

1) ALL SPARE WIRE WILL BE CLEARLY LABELED WITH THE CABLE NUMBER & A SPARE DESIGNATION ON INDIVIDUAL WIRES. THESE SPARES WILL BE LONG ENOUGH TO REACH ANY POINT IN THE PANEL.
2) SPARE CONDUCTORS SHOULD BE TRIMMED AND HEAT SHRINK SHOULD BE USED TO SECURE THE SPARE CONDUCTORS IN THE CABLE.
3) THE INNER CONNECTING CONDUCTORS BETWEEN THE PANELS ARE CODED AS FOLLOWS: THE FIRST GROUP OF CHARACTER IS THE WIRE NUMBER AND THE SECOND GROUP IS THE COLOR (I.E. 1(BK) SIGNIFIES THAT THE WIRE NUMBER IS 1 AND THE COLOR IS BLACK). WIRE COLOR CODE AS FOLLOWS: BK-BLACK, RD-RED, BU-BLUE, OR-ORANGE, YL-YELLOW, BN-BROWN. FOR COLORS THAT ARE DENOTED AS XX/YY, XX IS THE BASE COLOR AND YY IS THE SPIRAL STRIPE (I.E. RD/BK IS A RED WIRE WITH A BLACK SPIRAL STRIPE).
4) SEE SHEETS 11 & 12 FOR PANEL TO PANEL INNER CONNECTING CONDUCTOR AND CABLE DETAILS.

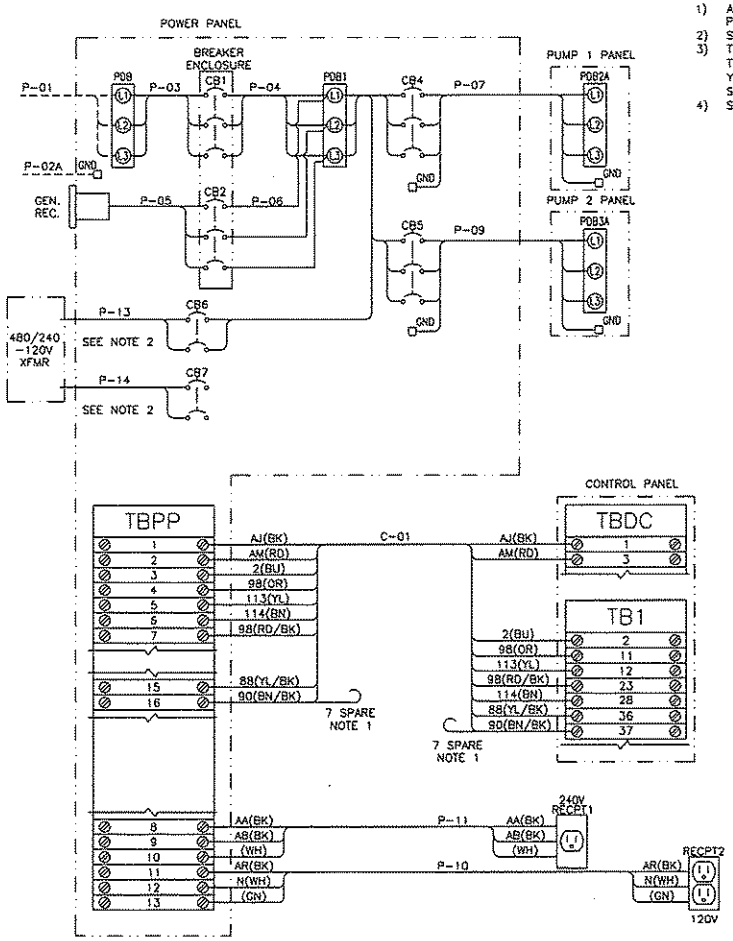

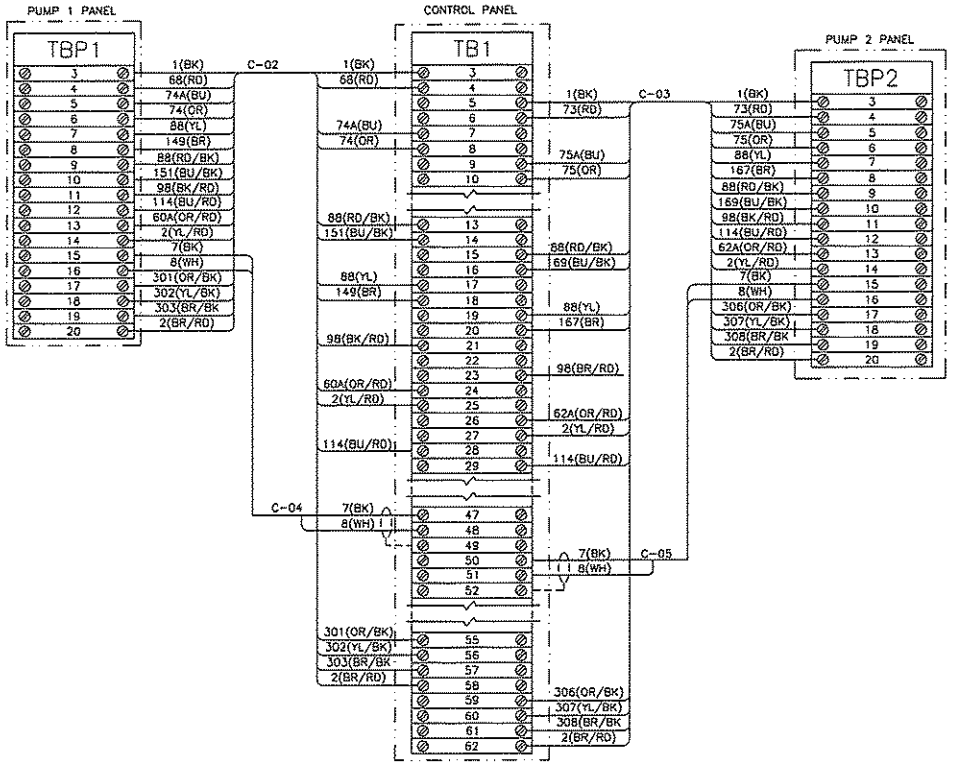

REVISIONS	BY

IMPROVEMENTS TO WASTEWATER COLLECTION SYSTEM

LIFT STATION CONSTRUCTION DETAILS

ELECTRICAL STANDARDS

FINAL SUBMITTAL

EMERALD COAST UTILITIES AUTHORITY

APPROVED BY:

Drawn	
Designed	
Checked	
Date	MAY '13
Scale	
Project No	
Sheet No.	13
	OF 18 Sheets

ALL WORK SHALL BE CONSTRUCTED IN ACCORDANCE WITH THE LATEST EDITION OF THE E.C.U.A. STANDARD SPECIFICATIONS

NOTES:

1. TOP AND BOTTOM OF BASE TO BE LEFT OPEN.
2. DRILL TOP OF BASE TO ATTACH ENCLOSURES AS REQUIRED.
3. DRILL BOTTOM OF BASE TO ATTACH TO SLAB AS REQUIRED.

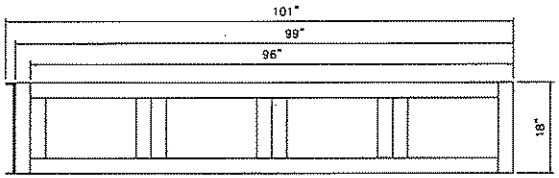

TOP VIEW

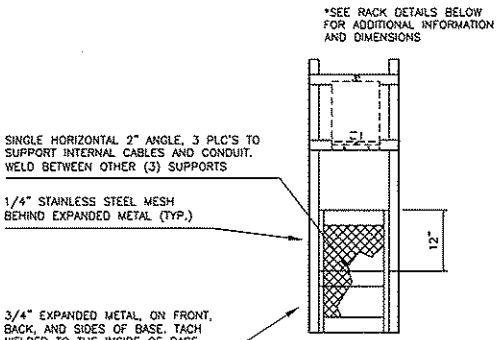

END VIEW

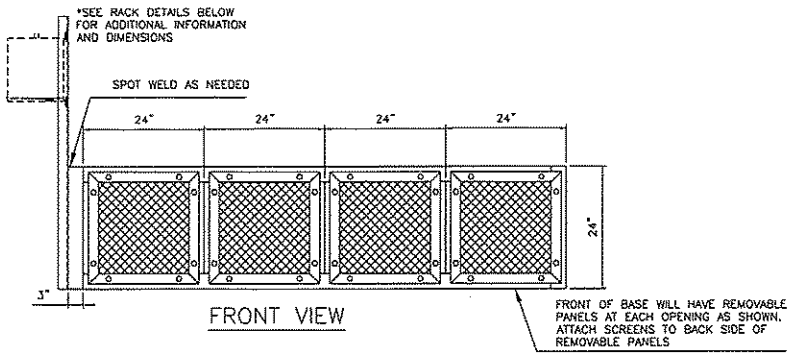

FRONT VIEW

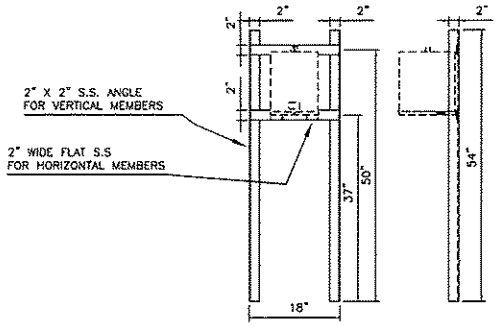

RACK DETAILS

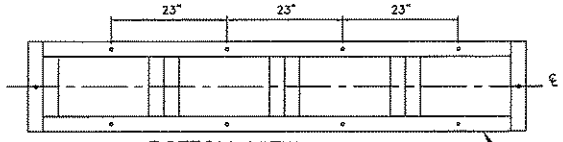

BOTTOM VIEW

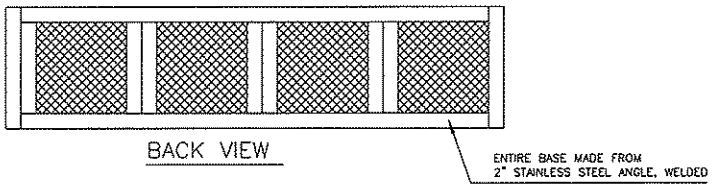

BACK VIEW

REVISIONS	BY

IMPROVEMENTS TO WASTEWATER COLLECTION SYSTEM

LIFT STATION CONSTRUCTION DETAILS

ELECTRICAL STANDARDS

FINAL SUBMITTAL

EMERALD COAST UTILITIES AUTHORITY

APPROVED BY:

Drawn	
Designed	
Checked	
Date	MAY '13
Scale	
Project No	
Sheet No.	14
	OF 18 Sheets

ALL WORK SHALL BE CONSTRUCTED IN ACCORDANCE WITH THE LATEST EDITION OF THE E.C.U.A. STANDARD SPECIFICATIONS

Power Panel Fuse Schedule				
Fuse	Type	Voltage	Amps	Description
F1	KTK-R-1	600	1A	Phase Monitor A Phase
F2	KTK-R-1	600	1A	Phase Monitor B Phase
F3	KTK-R-1	600	1A	Phase Monitor C Phase
F10	AGC-3	250	3A	Power Supply 1 Primary
F11	AGC-3	250	3A	Power Supply 2 Primary

Pump 1 Panel Fuse Schedule				
Fuse	Type	Voltage	Amps	Description
F4	FNQ-R-1/4	600	1/4A	Pump 1 CPT Phase A
F5	FNQ-R-1/4	600	1/4A	Pump 1 CPT Phase C
F6	FNQ-1/2	500	1/2A	Pump 1 CPT Secondary

Pump 2 Panel Fuse Schedule				
Fuse	Type	Voltage	Amps	Description
F7	FNQ-R-1/4	600	1/4A	Pump 2 CPT Phase A
F8	FNQ-R-1/4	600	1/4A	Pump 2 CPT Phase C
F9	FNQ-1/2	500	1/2A	Pump 2 CPT Secondary

Control Panel Fuse Schedule				
Fuse	Type	Voltage	Amps	Description
F12	AGC-10	250	10A	Power Supply 1 Secondary
F13	AGC-10	250	10A	Power Supply 2 Secondary
F14	AGC-10	250	10A	Control Power
F15	AGC-10	250	10A	Batteries
F16	AGC-2	250	2A	Radio Power Supply Primary
F17	AGC-2	250	2A	Radio Power Supply Secondary
F18	AGC-1/4	250	1/4A	Pump 1 Motor Thermal
F19	AGC-1/4	250	1/4A	Pump 2 Motor Thermal
F20	AGC-1/10	250	1/10A	Operator Interface
F21	AGC-1	250	1A	Digital Inputs 0.0-1.4
F22	AGC-1	250	1A	Digital Inputs 1.5-2.7
F23	AGC-2	250	2A	Digital Outputs 0.0-0.7
F24	AGC-2	250	2A	Digital Outputs 1.0-1.7
F25	AGC-1-1/2	250	1-1/2A	PLC Power
F26	AGC-3/4	250	3/4A	Process Transmitter Supply
F27	AGC-1/10	250	1/10A	Analog Inputs
F28	AGC-1/10	250	1/10A	Analog Outputs
F29	GMA-1/4	250	1/4A	Analog Input 2
F30	GMA-1/4	250	1/4A	Analog Input 3
F31	GMA-1/4	250	1/4A	Analog Input 4

HMI BUTTON LEGEND	
F1	FAULT RESET/ENABLE INTRUSION
SHIFT+F1	DISABLE INTRUSION
F2	ALTERNATE PUMP ASSIGNMENTS
F3	RESET PUMP 1 RUNTIME
SHIFT+F3	RESET PUMP 2 RUNTIME
F4	ALARMS SCREEN
F5	OVERVIEW SCREEN
F6	PUMP 1 SCREEN
F7	PUMP 2 SCREEN
F8	SETPOINTS SCREEN

CONTROL PANEL ISR INFORMATION TAGS

THIS AREA IN BLUE IS FOR INTRINSICALLY SAFE CIRCUITS AND DEVICES ONLY. THIS AREA INCLUDES THE AIR SPACE DIRECTLY IN FRONT OF THE BLUE AREA BETWEEN THE BACKPANEL AND THE ENCLOSURE WALLS AND DOOR INCLUDING THE BOTTOM OF THE ENCLOSURE. ONLY INTRINSICALLY SAFE DEVICES AND WIRING ARE ALLOWED IN THIS AREA. DO NOT ROUTE NON-INTRINSICALLY SAFE WIRING THROUGH THIS AREA OF ENCLOSURE.

WARNING

SUBSTITUTION OF COMPONENTS MAY IMPAIR INTRINSIC SAFETY

CONTROL PANEL EXTERIOR TAG INFORMATION

WARNING

TO PREVENT IGNITION OF FLAMMABLE OR COMBUSTIBLE ATMOSPHERES DISCONNECT POWER BEFORE SERVICING

PROVIDES INTRINSICALLY SAFE CIRCUIT EXTENSIONS FOR USE IN CLASS 1, GROUPS A, B, C, AND D WHEN CONNECTED PER REFERENCE DRAWINGS ON MAIN NAMEPLATE LABEL

CONTROL PANEL DEADFRONT TAG INFORMATION

SECURELY FASTEN ALL INNER DOOR LATCHES BEFORE CLOSING OUTER DOOR. FAILURE TO FOLLOW THESE INSTRUCTIONS COULD CAUSE THE OUTER DOOR TO JAM WHEN RE-OPENED

Nameplate Data							
Total Load (FLA)	16	18	21	27	33	39	53
Motor Hp	1	2	3	5	7.5	10	15
Motor FLA	2.1	3.4	4.8	7.6	11	14	21

Torque Rating Table							
	Horsepower						
Component	1	2	3	5	7.5	10	15
Incoming Distribution Block (PDB1)	35lb-in/4.0N-m	35lb-in/4.0N-m	35lb-in/4.0N-m	35lb-in/4.0N-m	40lb-in/4.5N-m	40lb-in/4.5N-m	120lb-in/13.5N-m
Main Ground Block	20lb-in/2.2N-m	20lb-in/2.2N-m	20lb-in/2.2N-m	20lb-in/2.2N-m	20lb-in/2.2N-m	20lb-in/2.2N-m	25lb-in/2.8N-m
Motor Distribution Block (PDB2 & 3)	35lb-in/4.0N-m	35lb-in/4.0N-m	35lb-in/4.0N-m	35lb-in/4.0N-m	35lb-in/4.0N-m	35lb-in/4.0N-m	35lb-in/4.0N-m
Motor Ground Block	35lb-in/4.0N-m	35lb-in/4.0N-m	35lb-in/4.0N-m	35lb-in/4.0N-m	35lb-in/4.0N-m	35lb-in/4.0N-m	35lb-in/4.0N-m

REVISIONS	BY

IMPROVEMENTS TO WASTEWATER COLLECTION SYSTEM

LIFT STATION CONSTRUCTION DETAILS

ELECTRICAL STANDARDS

FINAL SUBMITTAL

ECUA EMERALD COAST UTILITIES AUTHORITY

APPROVED BY:

Drawn:
Designed:
Checked:
Date: MAY '13
Scale:
Project No:
Sheet No. 15
OF 18 Sheets

ALL WORK SHALL BE CONSTRUCTED IN ACCORDANCE WITH THE LATEST EDITION OF THE E.C.U.A. STANDARD SPECIFICATIONS

REVISIONS	BY

HAZARDOUS (CLASSIFIED) LOCATION

CLASS I, ZONE 0 OR 1, GROUPS IIC, IIB, IIA or
CLASS I, DIVISION 1, GROUPS A,B,C,D
CLASS II, DIVISION 1, GROUPS E,F,G
CLASS III, DIVISION 1

NON-HAZARDOUS LOCATION

CLASS I, ZONE 2, GROUPS IIC, IIB, IIA or
CLASS I, DIVISION 2, GROUPS A,B,C,D

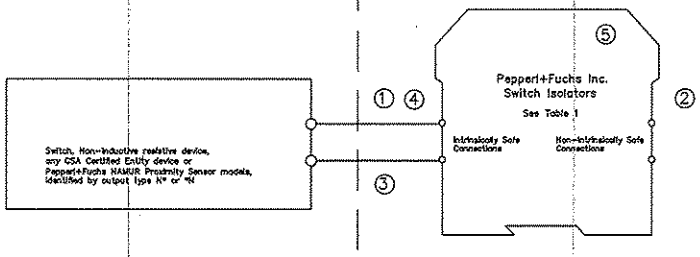

Notes:

① The intrinsically safe wiring must be installed in accordance with the Canadian Electrical Code CSA C22.1, Part 1, Appendix F.

② Barriers listed in Table 1 shall not be connected to any device that uses or generates in excess of 250Vrms or DC unless it has been determined that the voltage is adequately isolated from the barrier. Barriers listed in Table 2 shall not be connected to any device that uses or generates in excess of 60Vrms or DC unless the voltage is limited by an adequate means.

③ Any combination of up to 10 channels of the barriers listed in Table 1 or Table 2 may be connected in parallel and connected to a switch in a hazardous location.

④ The Entity concept allows interconnection of intrinsically safe apparatus with associated apparatus not specifically examined in combination as a system when the approved values of Voc and Isc for the associated apparatus are less than or equal to Vmax and Imax for the intrinsically safe apparatus and the approved values of Ca and La for the associated apparatus are greater than Ci + Ccable and Li + Lcable, respectively, for the intrinsically safe apparatus.

⑤ The following models with part number greater than 100000 are approved for mounting in a Class I, Zone 2, Groups IIC,IIB,IIA or Class I, Division 2, Groups A,B,C,D hazardous (classified) location: KF**-SR2-EX1.W, KF**-SR2-EX1.W.LB, KF**-SR2-EX2.W, KFD2-SR2-EX2.2S, KFD2-ST2-EX1.*, KFD2-ST2-EX2.*, KFD2-SOT2-EX1.*, KFD2-SOT2-EX2.*.

WARNING: Substitution of components may impair intrinsic safety and/or suitability for use in Class I, Division 2, Groups A,B,C,D or Class I, Zone 2, Groups IIC,IIB,IIA.
AVERTISSEMENT: La substitution de composants peut compromettre la sécurité intrinsèque.

No changes without prior permission
CSA
THIS DRAWING CONTAINS PROPRIETARY DATA. NO DISCLOSURE, REPRODUCTION, OR USE OF ANY PART MAY BE MADE EXCEPT BY WRITTEN PERMISSION.

Title Installation Drawing for CSA Certified Switch Isolators

Revisions				ECO No.	
In.	Date	Cons.	Resp.	Appr.	
	2-20-2008				

Pepperl+Fuchs® Inc. Twinsburg, OH 44087-2202 | Repl.No. – | Draw. No. 116-0047j | Sh. 1 of 2

TABLE 1: Barriers Certified to CSA Standard C22.2 No. 157 (Um = 250 V)

Model Numbers	Terminals	SYSTEM V_{max}(V)	SYSTEM Res. (Ω)	ENTITY V_{oc} (V)	ENTITY I_{sc}(mA)	ENTITY C_a(uF) GRPS A,B	ENTITY C_a(uF) GRPS C,E	ENTITY C_a(uF) GRPS D,F,G	ENTITY L_a(mH) GRPS A,B	ENTITY L_a(mH) GRPS C,E	ENTITY L_a(mH) GRPS D,F,G
KFD2-SOT-Ex1*,KFD2-SOT-Ex2* KFD2-SR-Ex1*,KFD2-SR-Ex2* KFD2-SRT-Ex1* KFD2-ST-Ex1*,KFD2-ST-Ex2* KFA5-SR2-Ex1*,KFA5_SR2-Ex2* KFA6-SR2-Ex1*,KFA6-SR2-Ex2* KFD2-SR2-Ex1*,KFD2-SR2-Ex2*	1-3, 2-3; 4-6, 5-6	12.6	650	12.9	19.8	1.273	3.820	10.18	84.88	298.7	744.4
KFA5-SOT2-Ex1*,KFA5-SOT2-Ex2* KFA6-SOT2-Ex1*,KFA6-SOT2-Ex2*	1-3, 2-3; 4-6, 5-6	10.5	811	10.5	13.0	2.66	7.9	21.3	192	671	1000

TABLE 2: Barriers Certified to CSA Standard E79-11 (Um = 60 V)

Model Numbers	Terminals	Load Parameters U_o (V_{oc})	I_o (I_{sc})	C_o(uF) GRPS IIC (A,B)	C_o(uF) GRPS IIB (C,E)	C_o(uF) GRPS IIA (D,F,G)	L_o(mH) GRPS IIC (A,B)	L_o(mH) GRPS IIB (C,E)	L_o(mH) GRPS IIA (D,F,G)
KFD2-SOT2-Ex1*,KFD2-SOT2-Ex2* KFD2-ST2-Ex1*,KFD2-ST2-Ex2*	1-3, 2-3; 4-6, 5-6	10.5	13.0	2.66	7.9	21.3	192	671	1000

No changes without prior permission
CSA
THIS DRAWING CONTAINS PROPRIETARY DATA. NO DISCLOSURE, REPRODUCTION, OR USE OF ANY PART MAY BE MADE EXCEPT BY WRITTEN PERMISSION.

Title Installation Drawing for CSA Certified Switch Isolators

Revisions				ECO No.	
In.	Date	Cons.	Resp.	Appr.	
	2-20-2008				

Pepperl+Fuchs® Inc. Twinsburg, OH 44087-2202 | Repl.No. – | Draw. No. 116-0047j | Sh. 2 of 2

IMPROVEMENTS TO WASTEWATER COLLECTION SYSTEM
LIFT STATION CONSTRUCTION DETAILS
ELECTRICAL STANDARDS
FINAL SUBMITTAL

EMERALD COAST UTILITIES AUTHORITY

APPROVED BY:

Drawn:
Designed:
Checked:
Date: MAY '13
Scale:
Project No:
Sheet No. 16
OF 18 Sheets

GENERAL ELECTRICAL NOTES

NEW WORK:

1. ENTIRE ELECTRICAL INSTALLATION SHALL BE IN ACCORDANCE WITH THE LATEST EDITION (UNLESS NOTED OTHERWISE) OF THE FOLLOWING CODES AND STANDARDS:
   1.1. NATIONAL ELECTRICAL CODE (NFPA 70).
   1.2. STANDARD FOR FIRE PROTECTION IN WASTEWATER TREATMENT AND COLLECTION FACILITIES (NFPA 820).
2. THE CONTRACTOR SHALL BE RESPONSIBLE FOR READING ALL PROJECT SPECIFICATIONS AND WILL BE RESPONSIBLE FOR MEETING ALL REQUIREMENTS OUTLINED IN THE SPECIFICATIONS.
3. CONTRACTOR SHALL COORDINATE ALL WORK WITH OTHER TRADES PRIOR TO ROUGH-IN AND INSTALLATION.
4. WORKING SPACE FOR ALL ELECTRICAL AND CONTROL EQUIPMENT OPERATING AT 600V VOLTS OR LESS TO GROUND AND LIKELY TO REQUIRE EXAMINATION, ADJUSTMENT, SERVICING, OR MAINTENANCE WHILE ENERGIZED SHALL COMPLY WITH NEC, ARTICLE 110.26.
5. THE ELECTRICAL DESIGN PROVIDES A NUMBER OF BRANCH CIRCUITS, AMPACITY AND OVERCURRENT PROTECTION FOR OTHER DIVISIONS DESIGN BASIS EQUIPMENT CONFORMING TO MANUFACTURER'S SPECIFICATIONS AVAILABLE AT TIME OF DESIGN. THE CONTRACTOR SHALL VERIFY ALL EQUIPMENT LOADS PRIOR TO ROUGH-IN. IF REQUIREMENTS OF EQUIPMENT ACTUALLY PROVIDED UNDER CONTRACT FOR CONSTRUCTION ARE DIFFERENT, CONTRACTOR SHALL MAKE ALL CHANGES NECESSARY WITHOUT INCREASE IN THE CONTRACT AMOUNT. SUCH CHANGES SHALL BE BASED UPON REQUIREMENTS, NAMEPLATE VALUES AND CODE REQUIREMENTS, WHICHEVER IS MORE STRINGENT, AND MAY INCLUDE, BUT ARE NOT LIMITED TO: SIZE OF CONDUCTORS, SIZE OF CONDUIT, QUANTITY OF CONDUCTORS AND CONDUITS, TYPE AND SIZE OF CIRCUIT BREAKER OR DISCONNECT, OVERLOADS, FULL-VOLTAGE STARTERS, REDUCED VOLTAGE SOFT STARTERS, VARIABLE FREQUENCY DRIVES, AND FUSE PROTECTION.
6. THE ELECTRICAL CONTRACTOR IS REQUIRED TO COORDINATE, PROVIDE, AND INSTALL A FULLY OPERATIONAL AND CODE COMPLIANT ELECTRICAL SYSTEM. THIS MAY INCLUDE THE ADDITION OF ELECTRICAL ITEMS NOT SHOWN ON THE ELECTRICAL PLANS, BUT REQUIRED FOR SYSTEM OPERATION.
7. CONTRACTOR SHALL COORDINATE INSTALLATION OF ELECTRICAL SERVICE WITH ELECTRICAL UTILITY COMPANY PROVIDING ELECTRICAL SERVICE TO FACILITY. CONTRACTOR SHALL PAY ALL FEES ASSESSED BY ELECTRICAL UTILITY COMPANY TO PROVIDE ELECTRICAL SERVICE TO FACILITY.
8. CONTRACTOR SHALL EXCAVATE AND CONDUCT DEMOLITION SO AS TO AVOID DAMAGE TO EXISTING UTILITIES AND OTHER UNDERGROUND OR CONCEALED ITEMS. IF EXISTING OR NEW ITEMS ARE DAMAGED, THE CONTRACTOR SHALL NOTIFY THE OWNER AT ONCE OF ALL DAMAGE AND SHALL REPAIR (OR REPLACE IF NECESSARY) TO THE ORIGINAL CONDITION TO THE SATISFACTION OF OWNER AND ENGINEER AT NO CHARGE IN THE CONTRACT AMOUNT.
9. THE CONTRACTOR SHALL BE RESPONSIBLE FOR PROVIDING DETAILED ELECTRICAL AND CONTROL EQUIPMENT LAYOUT DRAWINGS TO THE ENGINEER AND OWNER FOR APPROVAL PRIOR TO INSTALLATION.
10. ALL CONDUITS NOT LOCATED UNDER SLAB SHALL HAVE A MINIMUM BURIAL DEPTH OF 42", UNLESS NOTED OTHERWISE.
11. CONDUITS SHALL BE BURIED 42" (MINIMUM) BELOW GRADE WITH MARKER TAPE 6" ABOVE TOP OF CONDUIT, UNLESS NOTED OTHERWISE.
12. MINIMUM SIZE CONDUIT SHALL BE 1" (UNLESS NOTED OTHERWISE).
13. CONDUIT ROUTINGS AND DEVICE/EQUIPMENT LOCATIONS SHOWN ARE DIAGRAMMATIC ONLY. CONTRACTOR SHALL FIELD ROUTE AND LOCATE AS REQUIRED.
14. CONTRACTOR SHALL PROVIDE PULL BOXES IN POWER CIRCUIT CONDUIT AS REQUIRED TO LIMIT THE NUMBER OF BENDS TO A MAXIMUM OF 270° OR THREE 90° BENDS.
15. ALL WIRE SHALL BE COPPER.
16. ALL ELECTRICAL CIRCUITS SHALL INCLUDE A GREEN GROUNDING CONDUCTOR SIZED PER NEC.
17. CONDUCTORS SHALL BE TERMINATED ON TERMINAL BLOCKS.
18. THE CONTRACTOR SHALL TAG ALL POWER AND CONTROL SYSTEM CABLING AT ALL TERMINATION POINTS.
19. FINAL CONNECTION TO ALL EQUIPMENT IS SHOWN DIAGRAMMATIC. PROVIDE FINAL CONNECTION AS REQUIRED PER MANUFACTURER OF EQUIPMENT.
20. CONTRACTOR SHALL MAINTAIN A SET OF PRINTS AND MARK-UP DURING CONSTRUCTION TO REFLECT "AS-BUILT" CONDITIONS. PRINTS SHALL BE DELIVERED TO THE ENGINEER UPON COMPLETION OF THE PROJECT.
21. ALL HARDWARE SHALL BE STAINLESS STEEL.
22. ALUMINUM CONDUIT SHALL BE COATED WITH (2) WRAPS OF ANTI-CORROSION TAPE OR RUN THROUGH A SCHEDULE 80 PVC SLEEVE TO WHEN IN CONTACT WITH CONCRETE.
23. BARE COPPER SHALL BE COATED WITH (2) WRAPS OF ANTI-CORROSION TAPE OR RUN THROUGH A SCHEDULE 80 PVC SLEEVE TO WHEN IN CONTACT WITH CONCRETE.
24. ENGINEER OF RECORD SHALL BE RESPONSIBLE FOR FINAL SIZING OF ALL EQUIPMENT.

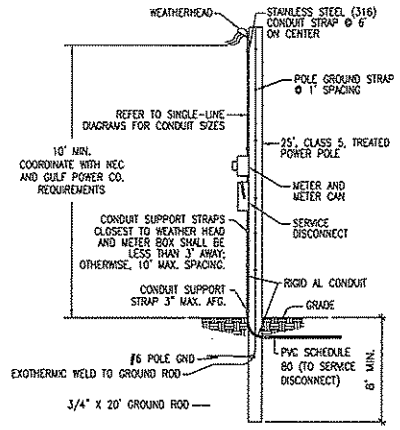

SERVICE LATERAL CONDUIT SHALL BE 3" (MIN) SCHEDULE 80 PVC BELOW GRADE AND 3" (MIN) RIGID AL CONDUIT ABOVE GRADE. ANY REQUIREMENTS BY THE UTILITY COMPANY SHALL PREVAIL OVER THE REQUIREMENTS OUTLINED HERE AND SHALL BE COORDINATED BY THE ELECTRICAL CONTRACTOR PRIOR TO INSTALLATION.

A3 UTILITY POLE DETAIL
NOT TO SCALE

ALL WORK SHALL BE CONSTRUCTED IN ACCORDANCE WITH THE LATEST EDITION OF THE E.C.U.A. STANDARD SPECIFICATIONS

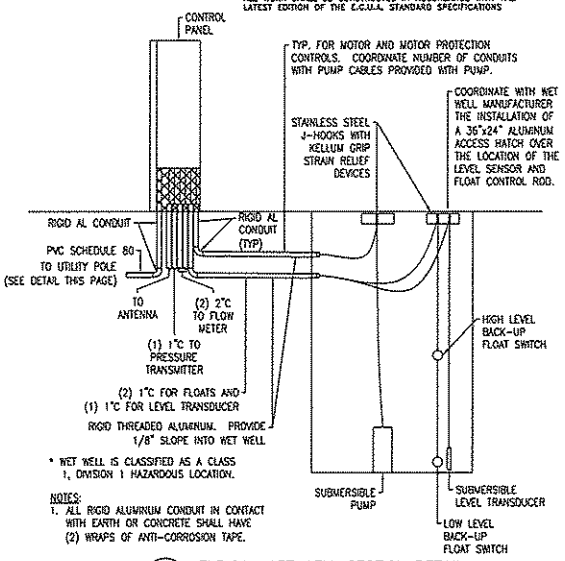

* WET WELL IS CLASSIFIED AS A CLASS 1, DIVISION 1 HAZARDOUS LOCATION.

NOTES:
1. ALL RIGID ALUMINUM CONDUIT IN CONTACT WITH EARTH OR CONCRETE SHALL HAVE (2) WRAPS OF ANTI-CORROSION TAPE.

B4 TYPICAL WET WELL SECTION DETAIL
NOT TO SCALE

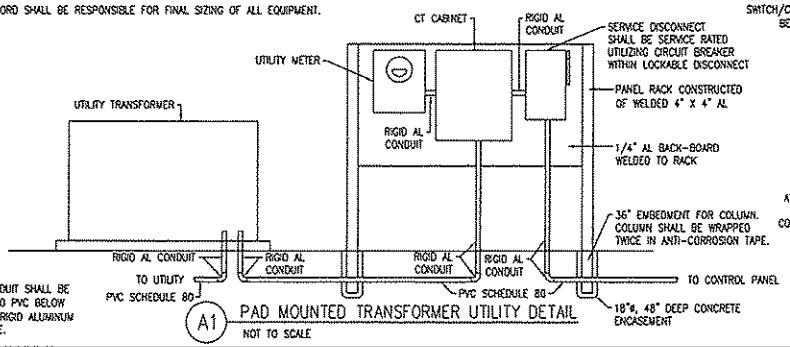

* SERVICE LATERAL CONDUIT SHALL BE 3" (MIN) SCHEDULE 80 PVC BELOW GRADE AND 3" (MIN) RIGID ALUMINUM CONDUIT ABOVE GRADE.

A1 PAD MOUNTED TRANSFORMER UTILITY DETAIL
NOT TO SCALE

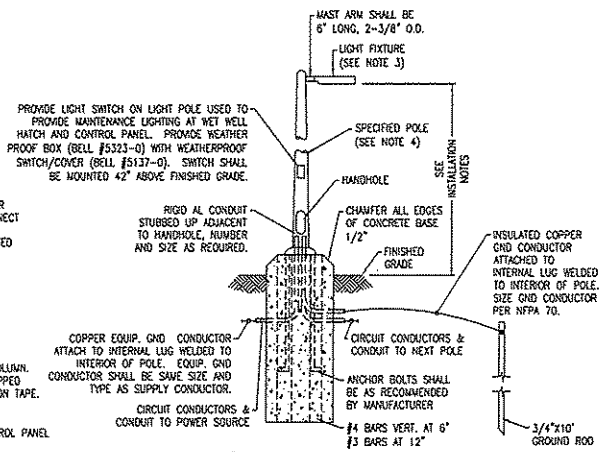

A4 LIGHT POLE INSTALLATION DETAIL
NOT TO SCALE

LIGHTING PERFORMANCE CRITERIA:
1. LIGHTING FIXTURE LAYOUT SHALL BE BASED UPON ACHIEVING 20 FOOT CANDLES (+/- 20%) AT THE FRONT OF THE CONTROL PANEL (WORK-PLANE OF 24" AFG) AND AT THE WET WELL ACCESS HATCH (WORKPLANE OF 0" AFG).
2. GENERAL SECURITY LIGHTING SHALL ENCOMPASS ACCESS GATE AND ALL PIPING/EQUIPMENT AT A MIN: AVERAGE 1 FOOT-CANDLE (+/- 20%, AT WORKPLANE OF 0" AFG).
3. REFER TO LIGHTING CONTROL DIAGRAM ON SHEET No. 18 FOR ADDITIONAL REQUIREMENTS.

LIGHT POLE INSTALLATION NOTES:
1. BURIAL AND DIAMETER DIMENSIONS INDICATED ARE FOR NOMINAL MINIMAL SIZES ONLY. FINAL DIMENSIONS SHALL BE DETERMINED BY A REGISTERED STRUCTURAL ENGINEER IN THE STATE OF FLORIDA, BASED UPON FIXTURES PROVIDED. PROVIDE SIGNED, DATED, AND SEALED PLANS FOR EACH INSTALLATION TYPE AND FIXTURE TYPE AS PART OF LIGHTING SUBMITTAL PACKAGE.
2. THE POLE AND FOUNDATION DESIGN SHALL BE BY A DELEGATED PROFESSIONAL ENGINEER TO MEET THE FOLLOWING CRITERIA:
   2.1. DESIGN WIND SPEED 160 MPH WITH A 1.3 GUST FACTOR. EXPOSURE CATEGORY C.
   2.2. SIZE EMBEDMENT FOR A MAXIMUM PERMANENT POLE DEFLECTION AFTER DESIGN WIND SPEED EVENT OF 1.00".
   2.3. ALUMINUM, ROUND OR SQUARE, TAPERED.
3. FIXTURE SHALL BE AMERICAN ELECTRIC LIGHTING ATB2 FIXTURE, 40 LED, 1000mA DRIVER, 120V, TYPE 4, WITH PHOTOCONTROL.
4. REFER TO SPECIFICATIONS SECTION 16521 "EXTERIOR LIGHTING" FOR ADDITIONAL REQUIREMENTS.
5. LIGHT FIXTURES SHALL BE MOUNTED AT 15'-0" (MAXIMUM) ABOVE FINISHED GRADE.

REVISIONS	BY

IMPROVEMENTS TO WASTEWATER COLLECTION SYSTEM
LIFT STATION CONSTRUCTION DETAILS
ELECTRICAL STANDARDS
FINAL SUBMITTAL

EMERALD COAST UTILITIES AUTHORITY

APPROVED BY:

Drawn:	
Designed:	
Checked:	
Date:	MAY '13
Scale:	
Project No:	
Sheet No.	17
	OF 18 Sheets

ALL WORK SHALL BE CONSTRUCTED IN ACCORDANCE WITH THE LATEST EDITION OF THE E.C.U.A. STANDARD SPECIFICATIONS

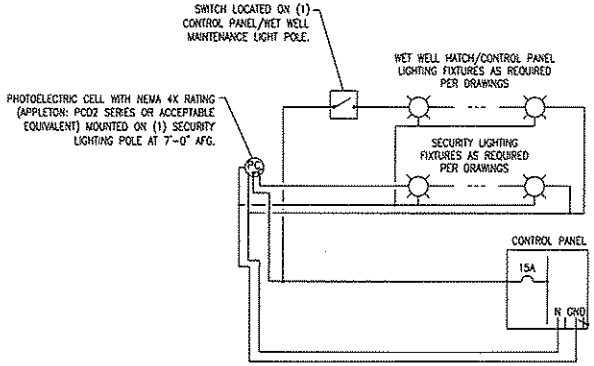

C2 TYPICAL LIGHTING CONTROL DIAGRAM
NOT TO SCALE

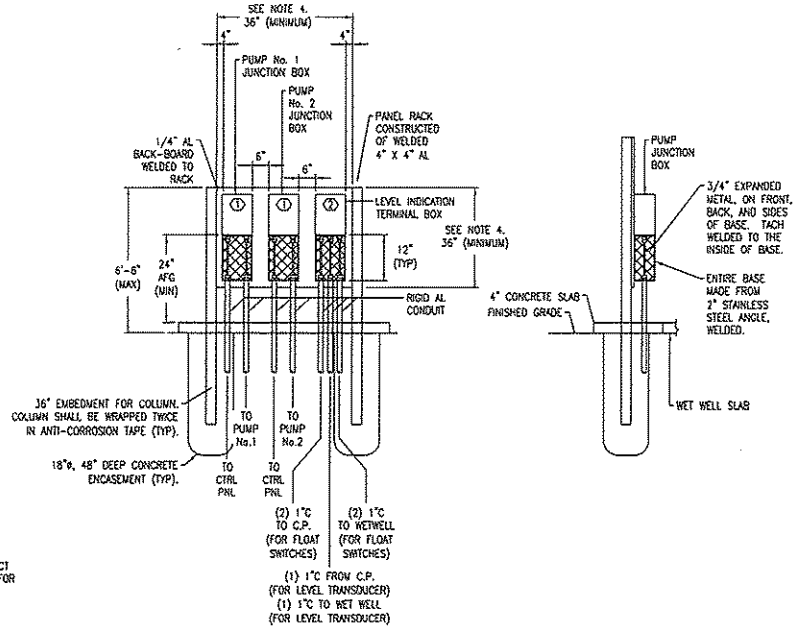

FRONT ELEVATION

SIDE ELEVATION

DETAIL NOTES:

1. THIS DETAIL SHALL ONLY APPLY WHEN THE CONTROL PANEL CANNOT BE PLACED WITHIN 6'-0" OF THE WET WELL TO ALLOW FOR CONNECTION OF STANDARD 50 FOOT PUMP CABLE CONNECTIONS.
2. BACKBOARD SHALL BE PLACED AT THE EDGE OF THE WET WELL SLAB BETWEEN THE WET WELL AND CONTROL PANEL.
3. JUNCTION BOXES SHALL BE MOUNTED SUCH THAT THEY ARE FACING THE WET WELL.
4. ENGINEER/CONTRACTOR SHALL SIZE JUNCTION BOXES AND BACKBOARDS BASED UPON INSTALLATION REQUIREMENTS PROVIDED AT TIME OF DESIGN.

KEY NOTES

① REFER TO "TYPICAL PUMP JUNCTION BOX ELEVATION" (THIS SHEET) FOR ADDITIONAL REQUIREMENTS.

② REFER TO "TYPICAL LEVEL INDICATION JUNCTION BOX ELEVATION" (THIS SHEET) FOR ADDITIONAL REQUIREMENTS.

A4 TYPICAL PUMP JUNCTION BOXES
NOT TO SCALE

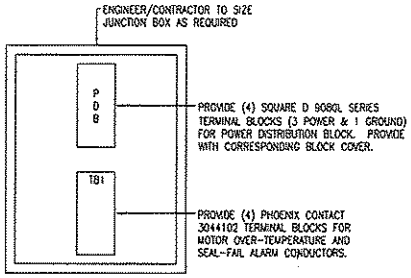

INTERIOR ELEVATION

DETAIL NOTES:

1. ALL TERMINAL BLOCKS SHALL BE PROVIDED WITH CORRESPONDING END BRACKETS AND END COVERS.
2. PROVIDE SEPARATE GROUND LUG IN EACH JUNCTION BOX, BONDED TO JUNCTION BOX.

A1 TYPICAL PUMP JUNCTION BOX ELEVATION
NOT TO SCALE

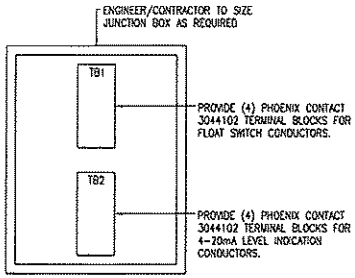

INTERIOR ELEVATION

DETAIL NOTES:

1. ALL TERMINAL BLOCKS SHALL BE PROVIDED WITH CORRESPONDING END BRACKETS AND END COVERS.
2. PROVIDE SEPARATE GROUND LUG IN EACH JUNCTION BOX, BONDED TO JUNCTION BOX.

A3 TYPICAL LEVEL INDICATION JUNCTION BOX ELEVATION
NOT TO SCALE

REVISIONS	BY

IMPROVEMENTS TO WASTEWATER COLLECTION SYSTEM

LIFT STATION CONSTRUCTION DETAILS

ELECTRICAL STANDARDS

FINAL SUBMITTAL

ECUA EMERALD COAST UTILITIES AUTHORITY

APPROVED BY:

Drawn	
Designed	
Checked	
Date	MAY '13
Scale	
Project No	
Sheet No.	18
	Of 18 Sheets

ALL WORK SHALL BE CONSTRUCTED IN ACCORDANCE WITH THE LATEST EDITION OF THE E.C.U.A. STANDARD SPECIFICATIONS

240-208V 3Ø 1HP - 15HP FULL VOLTAGE STARTER PANEL DESIGN - ALTERNATE

FOR

EMERALD COAST UTILITY AUTHORITY ESCAMBIA COUNTY, FL

SHEET NO.	SHEET DESCRIPTION
1	MAIN POWER DISTRIBUTION SCHEMATIC
2	CONTROL SCHEMATIC
3	DIGITAL INPUTS SCHEMATIC
4	DIGITAL OUTPUTS & ANALOG INPUTS SCHEMATIC
5	ANALOG OUTPUTS & STARTER CONTROL SCHEMATIC
6	TERMINAL BLOCK LAYOUT AND FIELD CONNECTIONS
7A	BACK-TO-BACK EXTERIOR PANEL LAYOUT & FIELD CONDUIT REQUIREMENTS
8	POWER & PUMP 1 INTERNAL PANEL LAYOUTS
9	PUMP 2 & CONTROL PANEL INTERNAL LAYOUTS
10	EQUIPMENT LIST
11	HORSEPOWER RELATED EQUIPMENT & POWER CONDUCTORS
12	PANEL TO PANEL CONDUCTORS & EQUIPMENT
13	PANEL TO PANEL WIRING
14A	BACK-TO-BACK STAINLESS STEEL FRAME LAYOUT
15	TABLES, LEGENDS & TAGS
16	ISR INSTRUCTIONS
17	GENERAL NOTES AND DETAILS
18	GENERAL NOTES AND DETAILS

REVISIONS	BY

IMPROVEMENTS TO WASTEWATER COLLECTION SYSTEM

LIFT STATION CONSTRUCTION DETAILS

ELECTRICAL STANDARDS

FINAL SUBMITTAL

EMERALD COAST UTILITIES AUTHORITY

APPROVED BY:

Drawn:
Designed:
Checked:
Date: MAY '13
Scale:
Project No:
Sheet No. 0
OF 18 Sheets

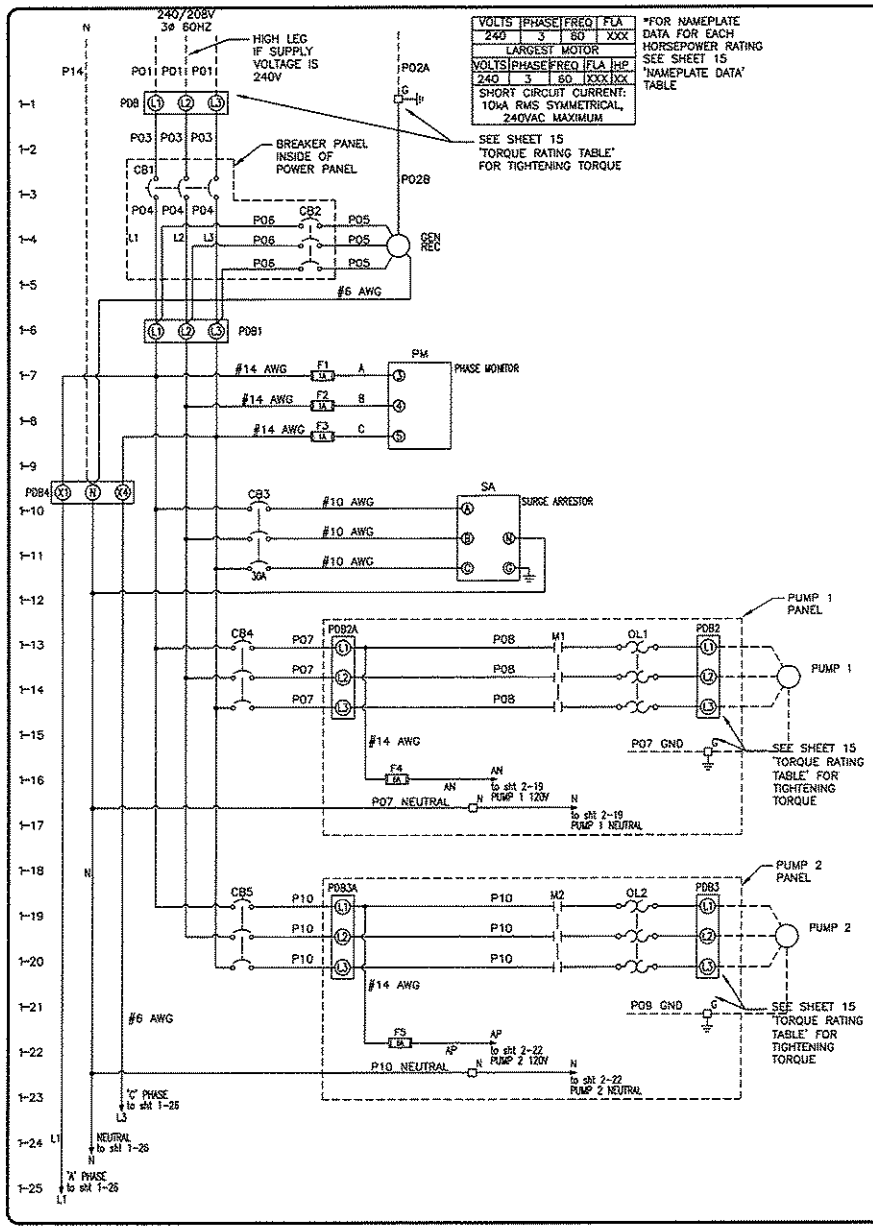

VOLTS	PHASE	FREQ	FLA
240	3	60	XXX
LARGEST MOTOR			
VOLTS	PHASE	FREQ	FLA	HP
240	3	60	XXX	XX
SHORT CIRCUIT CURRENT: 10kA RMS SYMMETRICAL, 240VAC MAXIMUM			

*FOR NAMEPLATE DATA FOR EACH HORSEPOWER RATING SEE SHEET 15 'NAMEPLATE DATA' TABLE

ALL WORK SHALL BE CONSTRUCTED IN ACCORDANCE WITH THE LATEST EDITION OF THE E.C.U.A. STANDARD SPECIFICATIONS

NOTES:

1. THE COMPLETED CONTROL PANEL SHALL BE LABELED AND MANUFACTURED TO MEET U.L. 508A AND 698A CERTIFICATION.
2. CONTROL PANEL WIRING SHALL BE STRANDED COPPER, MINIMUM SIZE #16 AWG WITH 600V 90DEGREE C TYPE THHN INSULATION.
3. CONTROL PANEL WIRING SHALL BE NUMBERED AT BOTH ENDS WITH TYPE WRITTEN, HEAT SHRINKABLE WIRE MARKERS.
4. ALL WIRING WITHIN THE CONTROL PANEL SHALL BE COLOR CODED OR CODED USING ELECTRICAL TAPE IN SIZES WHERE COLORED INSULATION IS NOT AVAILABLE. THE FOLLOWING CODING SHALL BE USED:
   - 4.1. UNGROUNDED AC CONDUCTORS AT SUPPLY VOLTAGE – BLACK
   - 4.2. GROUNDED AC CURRENT CARRYING CONDUCTORS – WHITE
   - 4.3. UNGROUNDED AC CONDUCTORS BELOW SUPPLY VOLTAGE – RED
   - 4.4. UNGROUNDED AC CONTROL CONDUCTORS & CONDUCTORS THAT REMAIN ENERGIZED WHEN THE MAIN DISCONNECT IS OFF – YELLOW
   - 4.5. UNGROUNDED DC CONTROL CONDUCTORS – ORANGE
   - 4.6. GROUNDED DC CURRENT CARRYING CONDUCTORS – BROWN
   - 4.7. INTRINSICALLY SAFE WIRING – BLUE
   - 4.8. GROUND CONDUCTORS – GREEN
5. SEE SHEETS 11 & 12 FOR DETAILS REGARDING ALL POWER CONDUCTORS LABELED PXX.
6. SEE SHEET 11 'HORSEPOWER RELATED COMPONENTS EQUIPMENT LIST' FOR RATINGS OF OVERCURRENT PROTECTION DEVICES.

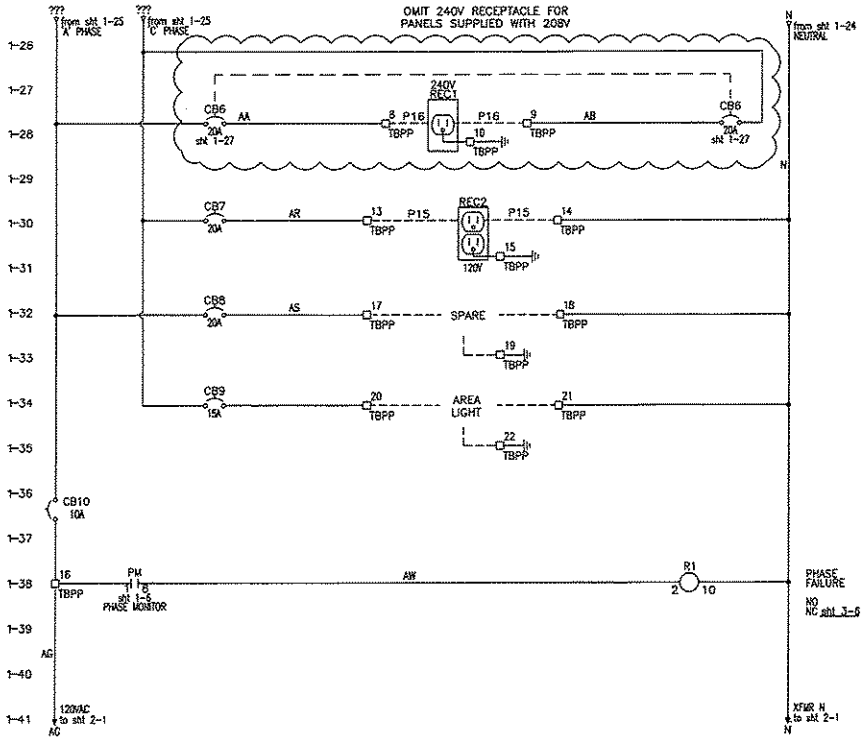

REVISIONS	BY

IMPROVEMENTS TO WASTEWATER COLLECTION SYSTEM

LIFT STATION CONSTRUCTION DETAILS

ELECTRICAL STANDARDS

FINAL SUBMITTAL

EMERALD COAST UTILITIES AUTHORITY

APPROVED BY:

Drawn	
Designed	
Checked	
Date	MAY '13
Scale	
Project No	
Sheet No	1
	OF 18 Sheets

ALL WORK SHALL BE CONSTRUCTED IN ACCORDANCE WITH THE LATEST EDITION OF THE E.C.U.A. STANDARD SPECIFICATIONS

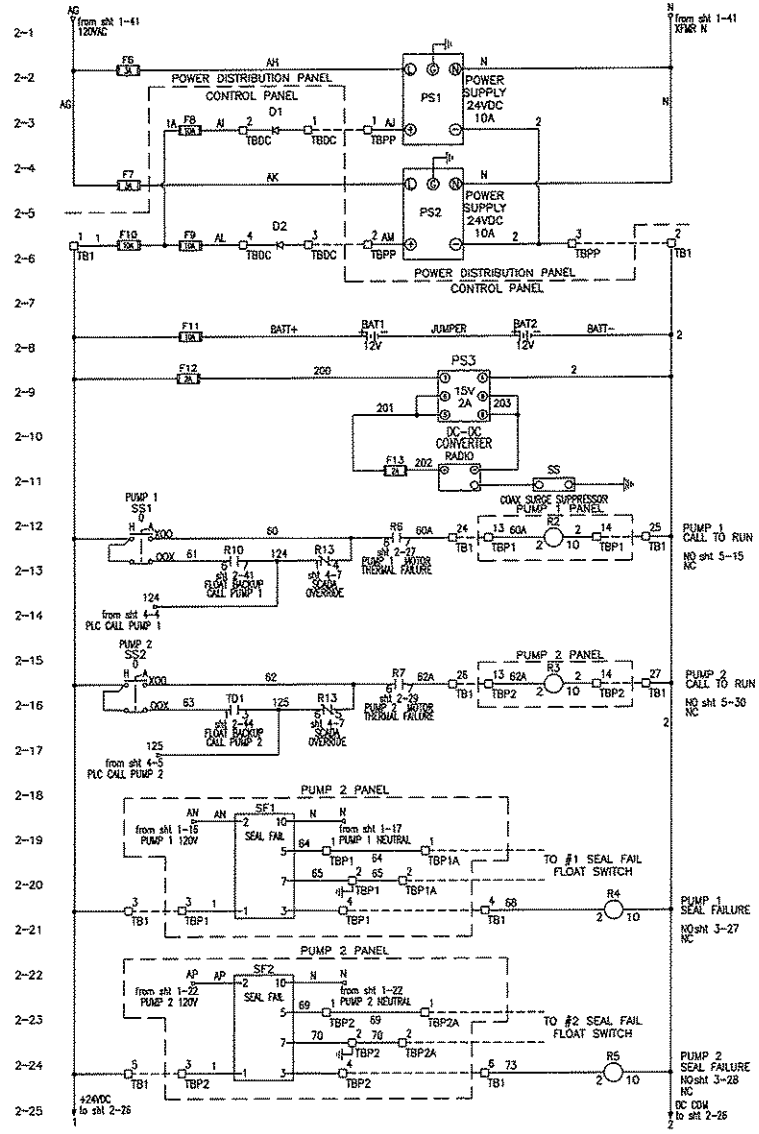

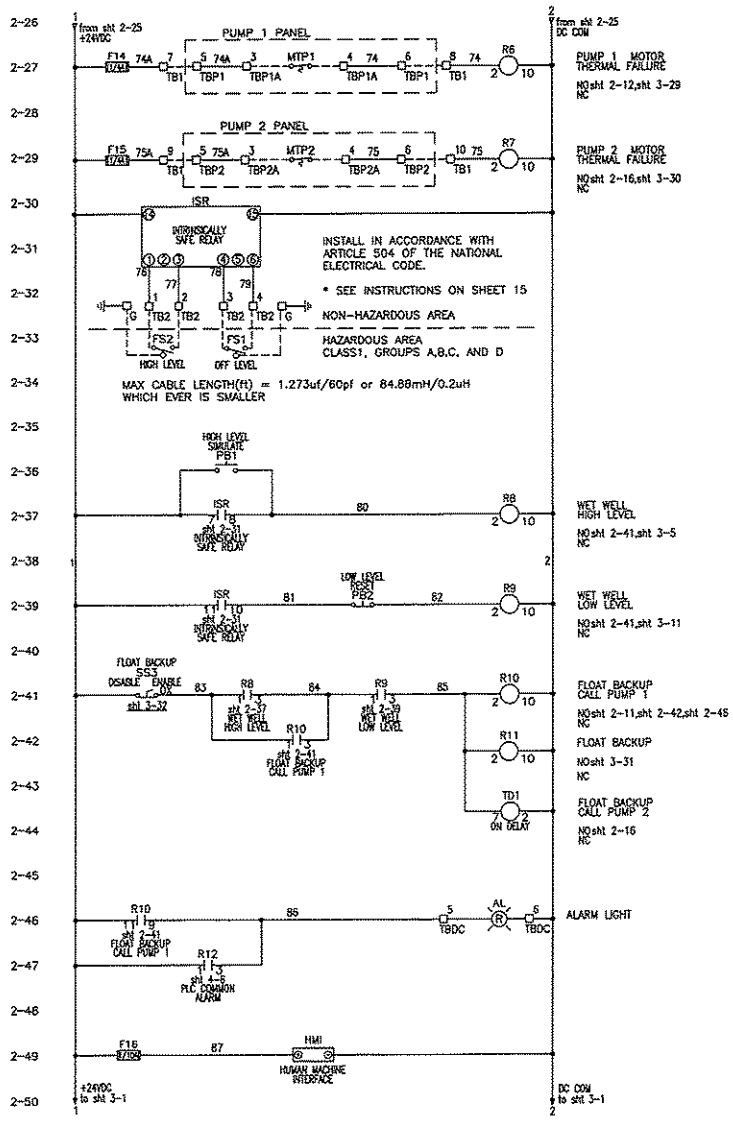

REVISIONS	BY

IMPROVEMENTS TO WASTEWATER COLLECTION SYSTEM

LIFT STATION CONSTRUCTION DETAILS

ELECTRICAL STANDARDS

FINAL SUBMITTAL

EMERALD COAST UTILITIES AUTHORITY

APPROVED BY:

Drawn	
Designed	
Checked	
Date	MAY '13
Scale	
Project No.	
Sheet No.	2
	Of 18 Sheets

ALL WORK SHALL BE CONSTRUCTED IN ACCORDANCE WITH THE LATEST EDITION OF THE E.C.U.A. STANDARD SPECIFICATIONS

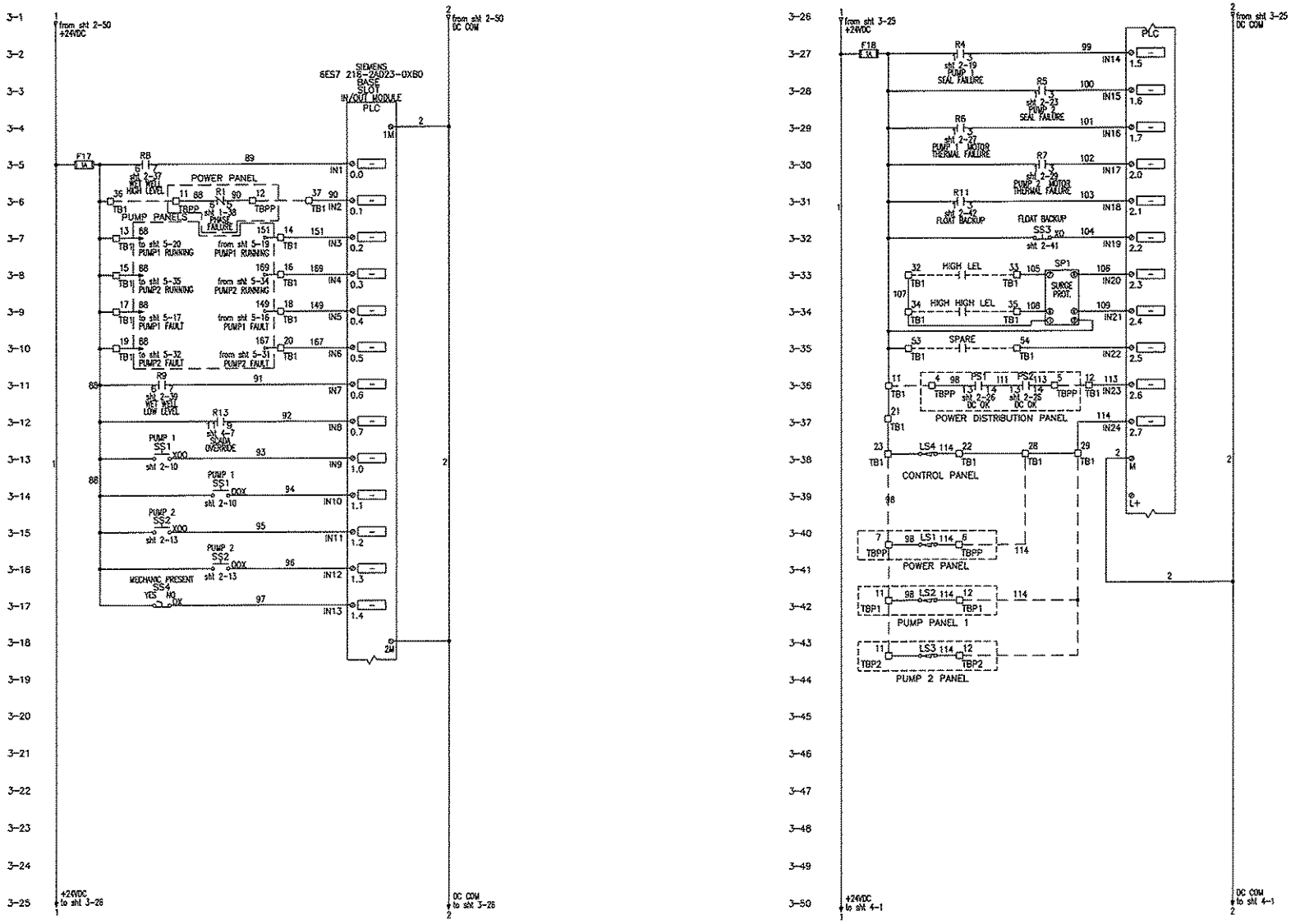

REVISIONS	BY

IMPROVEMENTS TO WASTEWATER COLLECTION SYSTEM

LIFT STATION CONSTRUCTION DETAILS

ELECTRICAL STANDARDS

FINAL SUBMITTAL

EMERALD COAST UTILITIES AUTHORITY

APPROVED BY:

Drawn	
Designed	
Checked	
Date	MAY '13
Scale	
Project No.	
Sheet No.	3
	Of 18 Sheets

ALL WORK SHALL BE CONSTRUCTED IN ACCORDANCE WITH THE LATEST EDITION OF THE E.C.U.A. STANDARD SPECIFICATIONS

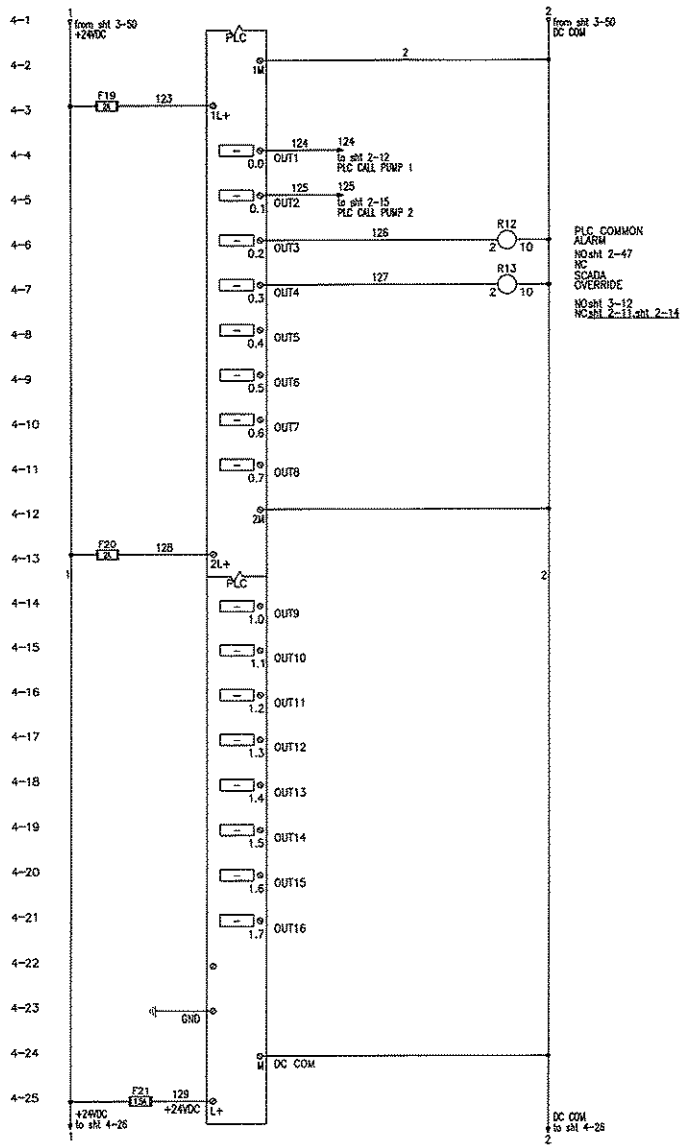

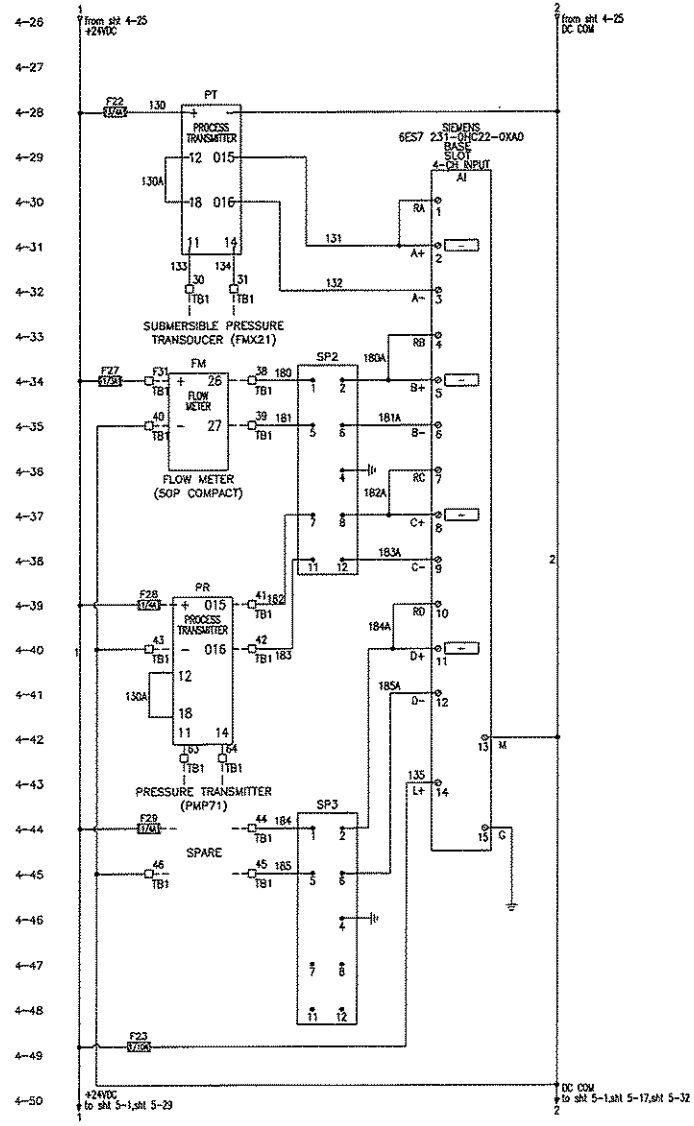

REVISIONS	BY

IMPROVEMENTS TO WASTEWATER COLLECTION SYSTEM

LIFT STATION CONSTRUCTION DETAILS

ELECTRICAL STANDARDS

FINAL SUBMITTAL

EMERALD COAST UTILITIES AUTHORITY

APPROVED BY:

Drawn:	
Designed:	
Checked:	
Date:	MAY '13
Scale:	
Project No:	
Sheet No.	4
	OF 18 Sheets

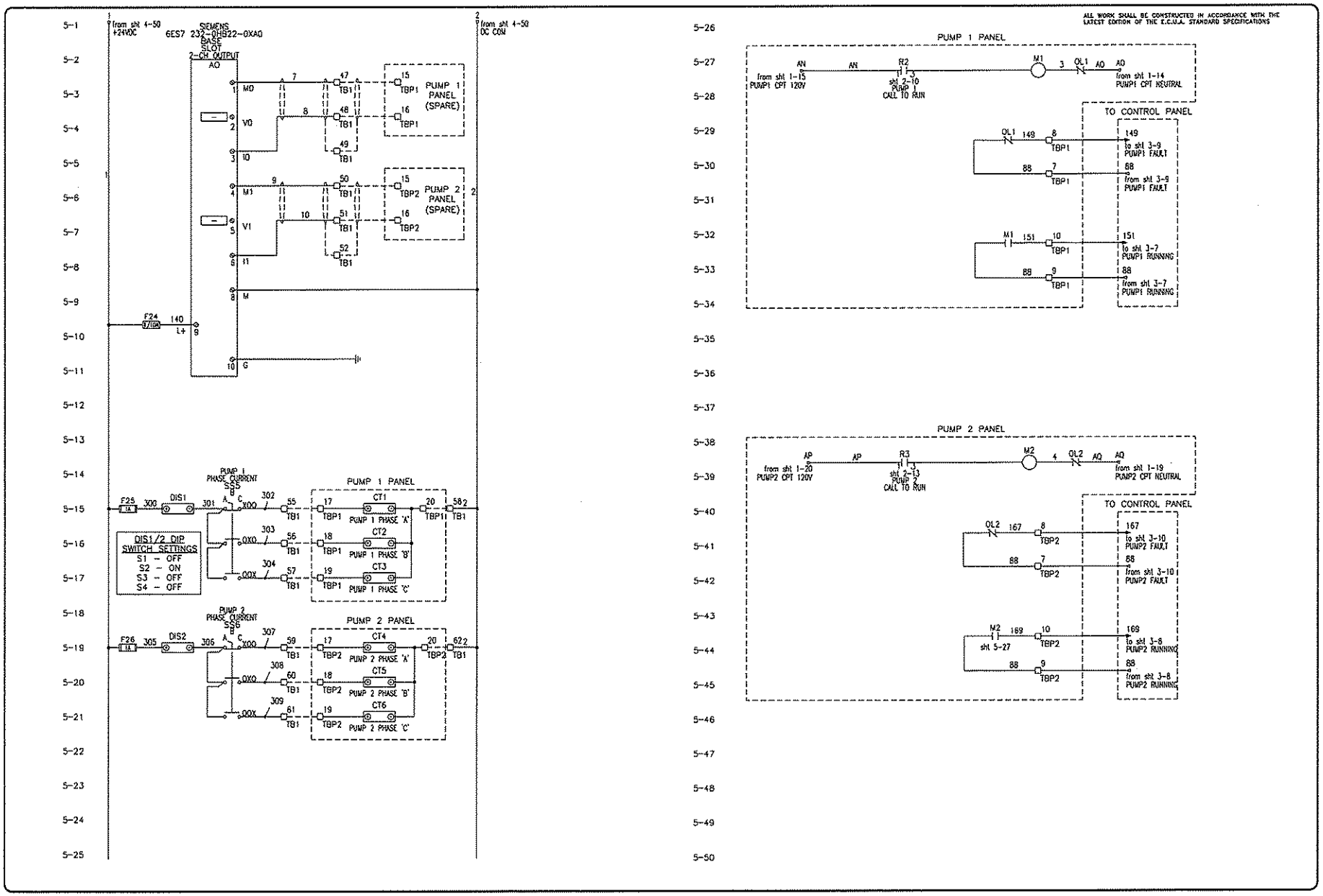

REVISIONS	BY

IMPROVEMENTS TO WASTEWATER COLLECTION SYSTEM

LIFT STATION CONSTRUCTION DETAILS

ELECTRICAL STANDARDS

FINAL SUBMITTAL

EMERALD COAST UTILITIES AUTHORITY

APPROVED BY:

Drawn	
Designed	
Checked	
Date	MAY '13
Scale	
Project No	
Sheet No.	5
OF 18 Sheets	

ALL WORK SHALL BE CONSTRUCTED IN ACCORDANCE WITH THE LATEST EDITION OF THE E.C.U.A. STANDARD SPECIFICATIONS

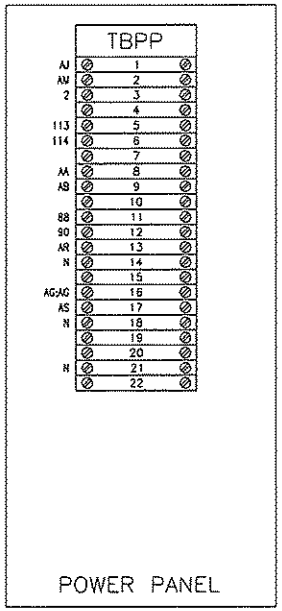

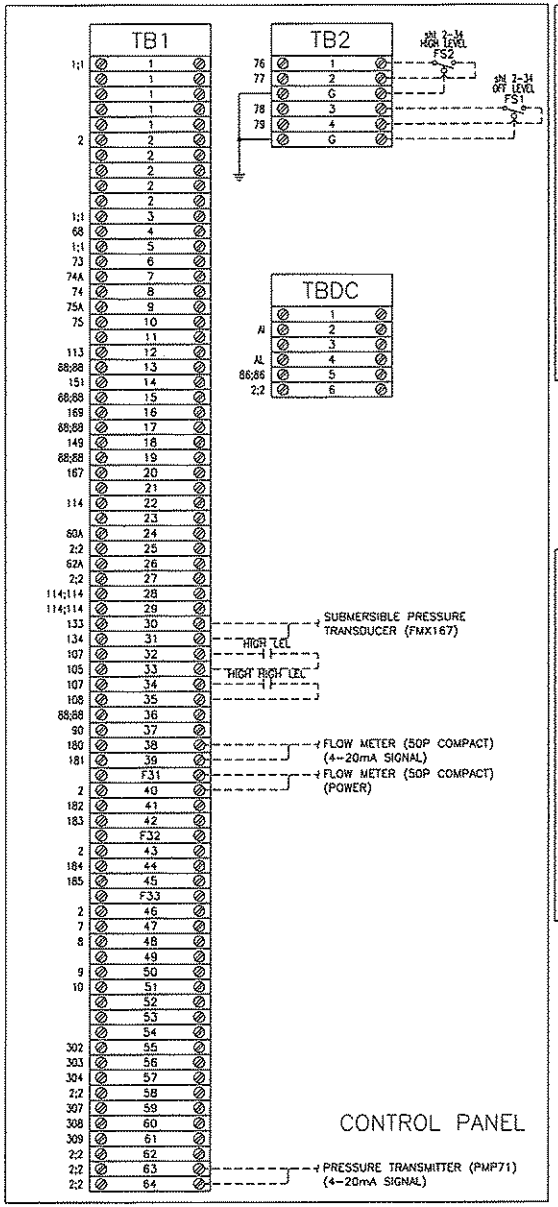

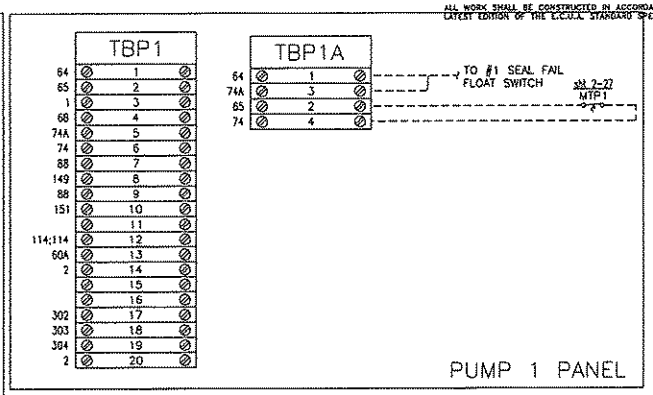

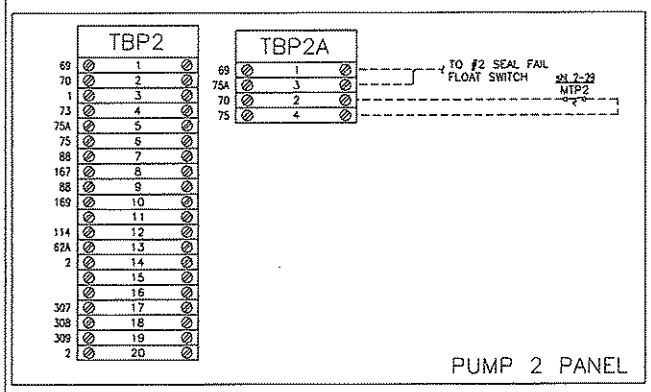

TYPICAL FOR ALL TERMINAL BLOCKS ON THIS DRAWING

USE COPPER CONDUCTORS ONLY
75 DEG C (167 DEG F)
5.3-7.0 LB/IN TIGHTENING TORQUE

NOTES:

TERMINAL BLOCK DESIGNATIONS:

- TBPP – POWER PANEL TERMINAL BLOCK
- TB1 – CONTROL PANEL TERMINAL BLOCK
- TB2 – INTRINSICALLY SAFE TERMINAL BLOCK
- TBP1 – PUMP 1 TERMINAL BLOCK
- TBP1A – PUMP 1 TERMINAL BLOCK (MOTOR THERMAL AND SEAL FAILURE)
- TBP2 – PUMP 2 TERMINAL BLOCK
- TBP2A – PUMP 2 TERMINAL BLOCK (MOTOR THERMAL AND SEAL FAILURE)

REVISIONS	BY

IMPROVEMENTS TO WASTEWATER COLLECTION SYSTEM

LIFT STATION CONSTRUCTION DETAILS

ELECTRICAL STANDARDS

FINAL SUBMITTAL

EMERALD COAST UTILITIES AUTHORITY

APPROVED BY:

Drawn	
Designed	
Checked	
Date	MAY '13
Scale	
Project No	
Sheet No.	6
	OF 18 Sheets

ALL WORK SHALL BE CONSTRUCTED IN ACCORDANCE WITH THE LATEST EDITION OF THE E.C.U.A. STANDARD SPECIFICATIONS

NOTES

1. SEE SHEET 15 FOR SCHEDULES, LEGENDS AND PANEL TAGS.

ATTENTION

THIS LAYOUT IS ONE OF TWO (2) POSSIBLE CHOICES – SEE SHEET 7 FOR THE OTHER OPTION. IF THIS LAYOUT OPTION IS SELECTED, SEE SHEET 14A FOR ASSOCIATED RACK DETAILS.

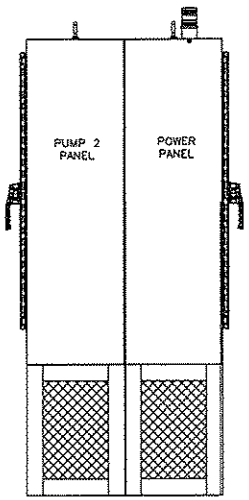

LEFT SIDE

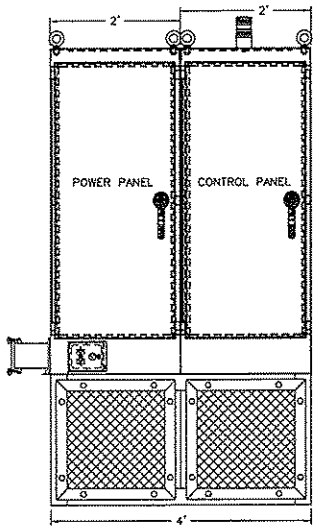

FRONT

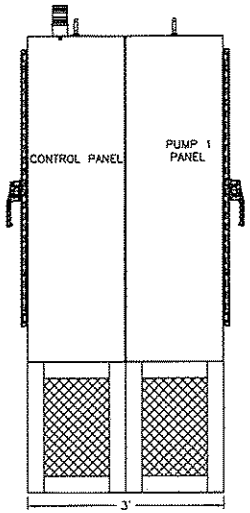

RIGHT SIDE

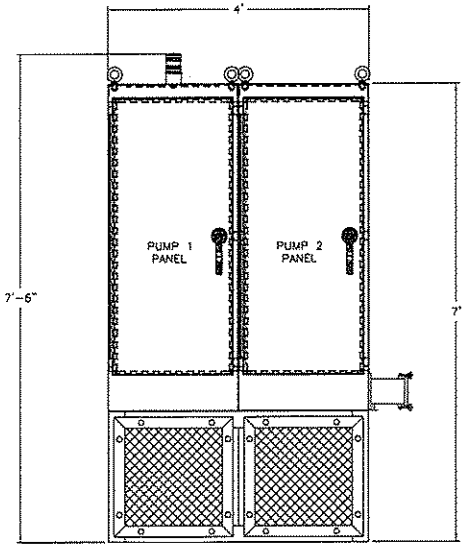

BACK

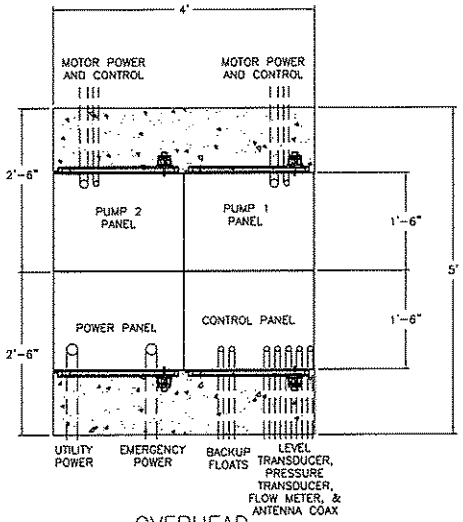

OVERHEAD

REVISIONS	BY

IMPROVEMENTS TO WASTEWATER COLLECTION SYSTEM

LIFT STATION CONSTRUCTION DETAILS

ELECTRICAL STANDARDS

FINAL SUBMITTAL

EMERALD COAST UTILITIES AUTHORITY

APPROVED BY:

Drawn	
Designed	
Checked	
Date	MAY '13
Scale	
Project No	
Sheet No.	7A
	OF 18 Sheets

ALL WORK SHALL BE CONSTRUCTED IN ACCORDANCE WITH THE LATEST EDITION OF THE E.C.U.A. STANDARD SPECIFICATIONS

NOTES

1. SEE SHEET 15 FOR SCHEDULES, LEGENDS AND PANEL TAGS.
2. LAYOUT OF THE POWER & STARTER SECTIONS DEPICTS THE LARGEST POSSIBLE HORSEPOWER CONFIGURATION.

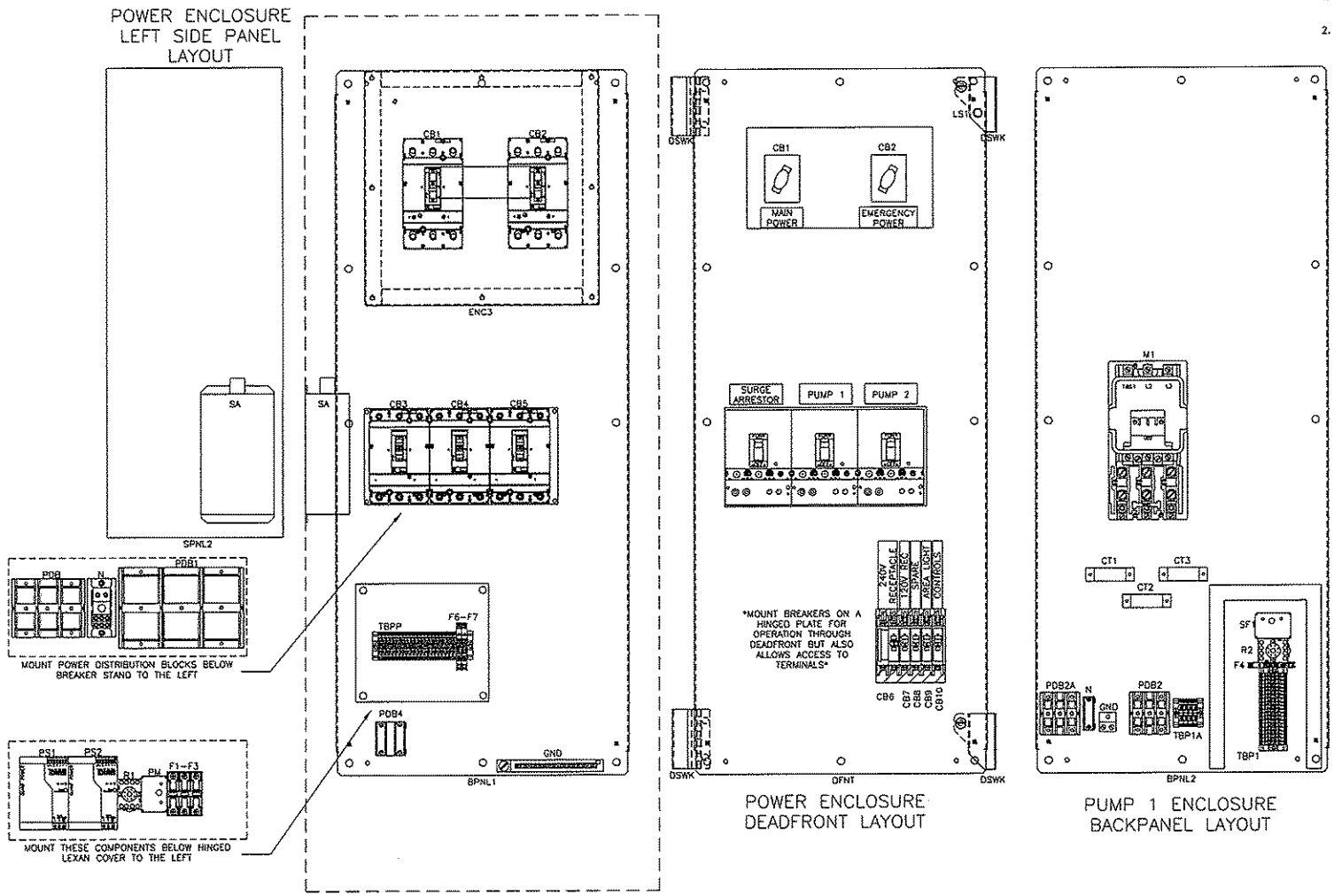

REVISIONS	BY

IMPROVEMENTS TO WASTEWATER COLLECTION SYSTEM

LIFT STATION CONSTRUCTION DETAILS

ELECTRICAL STANDARDS

FINAL SUBMITTAL

EMERALD COAST UTILITIES AUTHORITY

APPROVED BY:

Drawn:	
Designed:	
Checked:	
Date:	MAY '13
Scale:	
Project No:	
Sheet No.	8
	OF 18 Sheets

ALL WORK SHALL BE CONSTRUCTED IN ACCORDANCE WITH THE LATEST EDITION OF THE E.C.U.A. STANDARD SPECIFICATIONS

NOTES

1. SEE SHEET 15 FOR SCHEDULES, LEGENDS AND PANEL TAGS.
2. LAYOUT OF THE VFD SECTION DEPICTS THE LARGEST POSSIBLE HORSEPOWER CONFIGURATION.

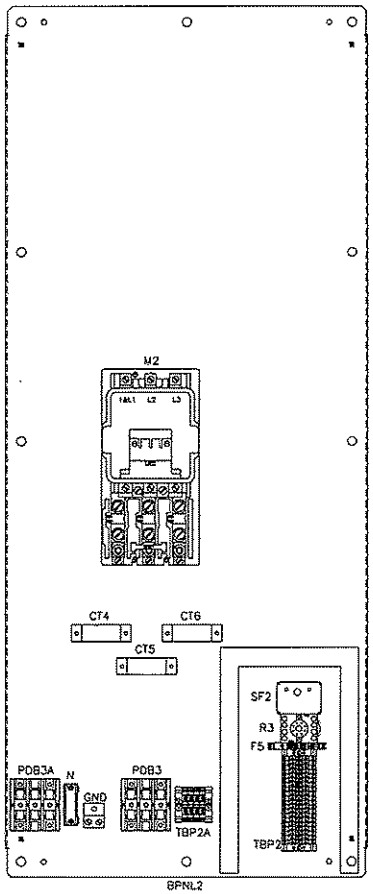

PUMP 2 ENCLOSURE
BACKPANEL LAYOUT

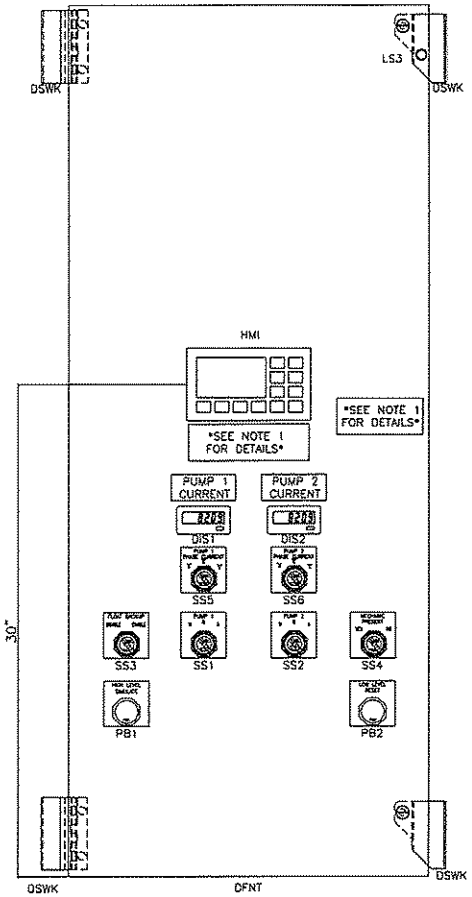

CONTROL ENCLOSURE
DEADFRONT LAYOUT

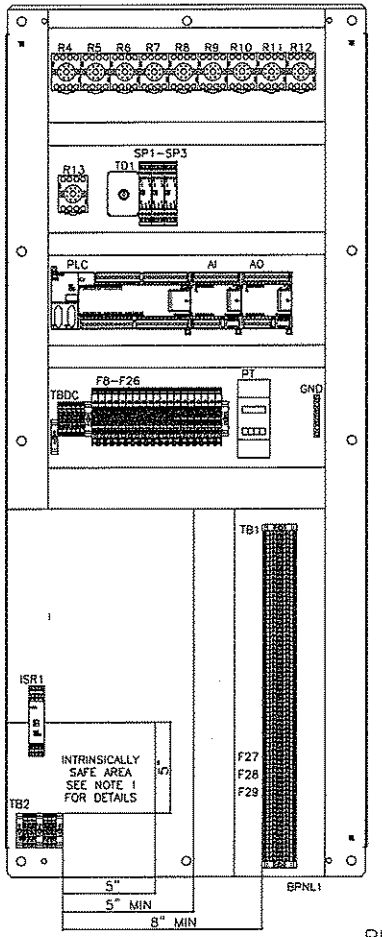

CONTROL ENCLOSURE
BACKPANEL LAYOUT

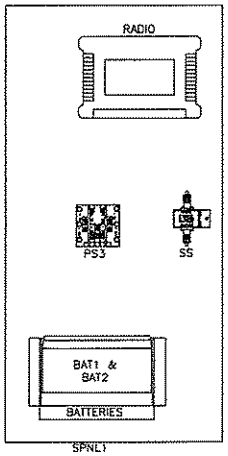

CONTROL ENCLOSURE
RIGHT SIDEPANEL LAYOUT

REVISIONS	BY

IMPROVEMENTS TO WASTEWATER COLLECTION SYSTEM

LIFT STATION CONSTRUCTION DETAILS

ELECTRICAL STANDARDS

FINAL SUBMITTAL

ECUA
EMERALD COAST UTILITIES AUTHORITY

APPROVED BY:

Drawn	
Designed	
Checked	
Date	MAY '13
Scale	
Project No	
Sheet No.	9
	Of 18 Sheets

ALL WORK SHALL BE CONSTRUCTED IN ACCORDANCE WITH THE LATEST EDITION OF THE E.C.U.A. STANDARD SPECIFICATIONS

240-208V FVNR Equipment List

Item	Tag	Panel	Description	Manufacturer	Model	Qty
1	ENC1	All	60X24X18 NEMA 4X SS Enclosure	Hoffman	A60241SSFSN4	4
2	BPNL1	All	60x24 Painted Steel Backpanel	Hoffman	A60P24F1	4
3	SPNL1	Control	28"H x 12"W Aluminum Sidepanel	EWS	Custom	1
4	DFNT	Power & Control	60x24 Aluminum Deadfront Panel	EWS	Custom	2
5	DSWK	Power & Control	Door Swing Kit	Hoffman	ANADFK	2
6	FRM	Power	Expanded Metal Stainless Steel Frame	EWS	SEE DRAWINGS	1
7	PDB	Power	Incoming Power Distribution Block PDB	Square D	SEE HP TABLE SHEET 11	1
8	PDB	Power	Incoming Power Distribution Block PDB Cover	Square D	SEE HP TABLE SHEET 11	1
9	GND	Power	Power Panel Ground Bar	Square D	PK15GTA-L	1
10	ENC3	Power	16"H x 16"W x 8"D Screw Cover Type 3R Enclosure	Hoffman	A16168G5C	1
11	CB1	Power	600V Main Circuit Breaker	Square D	SEE HP TABLE SHEET 11	1
12	CB2	Power	600V Emergency Circuit Breaker	Square D	SEE HP TABLE SHEET 11	1
13	CB1,CB2	Power	Mechanical Interlock for H/J Frame Circuit Breakers	Square D	529369	1
14	CB1,CB2	Power	Door Mounted Rotary Handle for H/J Frame Circuit Breakers	Square D	529338	2
15	GEN REC	Power	NEMA 4X Generator Receptacle	Appleton	SEE HP TABLE SHEET 11	1
16	GEN REC	Power	NEMA 4X Generator Plug (Ship Loose.)	Appleton	SEE HP TABLE SHEET 11	1
17	PDB1	Power	Main Power Distribution Block PDB1	Square D	SEE HP TABLE SHEET 11	1
18	PDB1	Power	Main Power Distribution Block PDB1 Cover	Square D	SEE HP TABLE SHEET 11	1
19	F1-F3	Power	3 Pole Rejection type Fuse Block	Bussmann	BC6033PQ	1
20	F1-F3	Power	1A Rejection Type Fuse, Class CC	Bussmann	KTK-R-1	3
21	F1-F3	Power	Fuse Cover	Bussmann	SAMI-7N	3
22	PM	Power	240V Phase Monitor	Timemark	2S7B	1
23	PM	Power	600V, 8-Pin Relay Base	ABB	OTOSPC	1
24	CB3-CB5	Power	Breaker Stand	EWS	Custom	1
25	CB3	Power	30A 600V 3 Pole Circuit Breaker, Main Surge Arrestor	Square D	HDL36030	1
26	SA	Power	Main Surge Arrestor	SSI	SEE HP TABLE SHEET 11	1
27	CB4, CB5	Power	600V 3 Pole Circuit Breaker, Starter	Square D	SEE HP TABLE SHEET 11	2
28	CB4, CB5	Power	H & J Frame Circuit Breaker Locking System	Square D	529371	2
29	PDB2A, PDB3A	Pump 1 & 2	Starter Power Distribution Block	Square D	9080LBA362104	2
30	PDB2A, PDB3A	Pump 1 & 2	Starter Power Distribution Block Cover	Square D	9080LB23	2
31	M1, M2	Pump 1 & 2	NEMA Starter	Square D	SEE HP TABLE SHEET 11	2
32	OL1, OL2	Pump 1 & 2	Overload Heaters	Square D	SEE HP TABLE SHEET 11	2
33	OL1, OL2	Pump 1 & 2	Overload Contact, (2) N.C.	Square D	9999-SO5	2
34	GND	Pump 1 & 2	Motor Ground Lug	NSI	2-0T	2
35	PDB2, PDB3	Pump 1 & 2	Motor Power Distribution Block PDB2&3, (1)#14-2/0.....(1)#14-2/0	Square D	9080LBA362101	2
36	PDB2, PDB3	Pump 1 & 2	Motor Power Distribution Block PDB2&3 Cover	Square D	9080LB23	2
37	CB7-CB11	Power	Hinged Aluminum Bracked for Mounting 240/120V Circuit Breakers through Deadfront	EWS	Custom	1
38	PDB4	Power	240V/120V Power Distribution Block PDB4, (1) #14-2 ... (4) #18-10	Square D	9080LBA361104	1
39	CB6	Power	20A, 240V, 2 Pole Circuit Breaker	Square D	QOU220	1
40	REC1	Power	20A, 250V, 6-20R Receptacle	P&S	5872I	1
41	CB7, CB8	Power	20A, 120V 1 Pole Circuit Breaker	Square D	QOU120	2
42	REC2	Power	120V 20A GFCI Duplex Receptacle NEMA5-20R	P&S	2094-I	1
43	REC1, REC2	Power	Custom Receptacle Cover NEMA 4X S.S.	HOFFMAN	HIDRPSS-MOD	1
44	REC1, REC2	Power	3/4 1G AL FD BOX	Appelton	4CS-1/2	2
45	CB9	Power	15A, 120V, 1 Pole Circuit Breaker	Square D	QOU115	1
45	CB10	Power	10A, 120V, 1 Pole Circuit Breaker	Square D	QOU110	1
46	R1	Power	120V 3PDT General Purpose Relay w/ Indicator Lamp	Potter Brumfield	KRPA-14AN-120	1
47	R1-R13, SF1, SF2	All	11 Pin Relay Base	ABB	NOS-11	15
48	F4-F7	Pump 1, 2 & Power	Fused Terminal Block w/ 120V Blown Fuse Indication	Allen Bradley	1492-H4	4
49	-	Pump 1, 2 & Power	1492-H4 &HS Fused Terminal Block End Cover	Allen Bradley	1492-N37	4
50	F6, F7	Power	3A Fuse	Bussmann	AGC-3	2
51	PS1, PS2	Power	10A 24VDC Power Supply	Phoenix Contact	2938604	2
52	D1, D2	Power	10A Diode, P1000A	Newark	51R7094	2
53	-	Power	Custom Stand/Lexan Hinged Cover w/Alum Stand for TBPP & Power Supply Fuses	EWS	Custom	1
54	F8-F24	Control	Fused Terminal Block w/ 24VDC Blown Fuse Indication	Allen Bradley	1492-H5	17
55	F8 - F11	Control	10A Fuse	Bussmann	AGC-10	4
56	BAT1, BAT2	Control	12VDC Battery	Power Sonic	PS1290	2
57	PS3	Control	24VDC-15VDC Converter, 2A	Vicor	V1-J12-EY-B1	1
58	RADIO	Control	400MHz Radio	GE MDS	SD04MD	1
59	RADIO	Control	DB9 Male/Male Gender Changer	Office Depot	946660	1
60	RADIO/SS	Control	3 Foot LMR400UF Coaxial Jumper NMale to TNCMale	Tessco	324503	1
61	SS	Control	Coaxial Surge Suppressor, 50-700MHz	Polyphaser	IS-50NX-C1	1
62	-	-	50FT Coaxial Cable, NMale-Nmale, Wireless Solutions 400-07-07-P50 (Ship Loose.)	Tessco	370875	1

240-208V FVNR Equipment List

Item	Tag	Control	Description	Manufacturer	Model	Qty
63	-	-	400MHz Yagi Antenna w/ N Female Connector, MAXRAD MYA4506N (Ship Loose.)	Tessci	37634	1
64	-	-	Antenna Tower 5' Base Section, ROHN R-SB25GS (Ship Loose)	Tessco	64559	1
65	-	-	Antenna Tower 10' Mid Section, ROHN R-25G (Ship Loose)	Tessco	36866	1
66	-	-	Antenna Tower 9' Top Section, ROHN R-25AG2 (Ship Loose)	Tessco	70080	1
67	-	-	21' 1-1/4" S.S. Antenna Mast (Ship Loose)	Bell Steel	023008	1
68	F14, F15	Control	1/4A Fuse	Bussmann	AGC-1/4	2
69	F12, F13, F19, F20	Control	2A Fuse	Bussmann	AGC-2	4
70	SS1, SS2	Control	3 Position Selector Switch, 30MM	Square D	9001SX538H2	2
71	R2-R13	Control	24VDC 3PDT General Purpose Relay w/ Indicator Lamp	Potter Brumfield	KRPA-14DN-24	12
72	SF1, SF2	Control	120V Seal Failure Relay	ATC	SPM-120-AAA-10X	2
73	ISR1	Control	Intrinsically Safe Barrier Relay, 24VDC	Pepperl & Fuchs	KFD2-SR2-Ex2.W	1
74	TB2	Control	Terminal Block, Blue TB2	Phoenix Contact	3044115	4
75	TB2	Control	Terminal Block, Blue End Barrier, TB2	Phoenix Contact	3047235	1
76	TB2	Control	Ground Terminal Blocks, TB2	Phoenix Contact	3044128	2
77	PB1, PB2	Control	Push Button, Black 1NO 1NC	Square D	9001SXR18H13	2
78	SS3, SS4	Control	2 Position Selector Switch, 30MM	Square D	9001SX511BH2	2
79	TD1	Control	24VDC 0-180 Second Time Delay Relay	Square D	RE48ATM12MW	1
80	TD1	Control	8 Pin Relay Base	ABB	NOS-8	1
81	AL	Control	24VDC Red Alarm Light	Federal Signal	LP3M-012-048R	1
82	F16, F23, F24	Control	1/10A Fuse	Bussmann	AGC-1/10	3
83	HMI	Control	TD400C Text Display	Siemens	6AV6 640-0AA00-0AX1	1
84	F4, F5, F17, F18	Control	1A Fuse	Bussmann	AGC-1	4
85	PLC	Control	S7-200 Dual Com Port Processor w/ 24 DI & 16 DO Points	Siemens	6ES7 216-2AD23-0XB0	1
86	AI	Control	S7-200 4 Point AI Module	Siemens	6ES7 231-0HC22-0XA0	1
87	AO	Control	S7-200 2 Point AO Moduel	Siemens	6ES7 232-0HB22-0XA0	1
88	PLC	Control	S7-200 Communication cable PC/PPI RS-232/485	Siemens	6ES7 901-3CB30-0XA0	1
89	SP1-SP3	Control	Plug In DI Surge Suppression, PT 4x1...DC	Phoenix Contact	2838322	3
90	SP1-SP3	Control	Terminal Block Base for Plugable Surge Supression, PT 4x1-BE	Phoenix Contact	2839363	3
91	LS1-LS4	Control	Panel Intrusion Switches, N.C. Contacts	NSI	76030PS	4
92	F21	Control	1-1/2A Fuse, PLC Supply	Bussmann	AGC-1-1/2	1
93	F22	Control	3/4A Fuse, Process Analyzer	Bussmann	AGC-3/4	1
94	PT	Control	Level Transmitter	Endress & Hauser	RMA42AAAH2	2
95	PT	-	Submersible Level Transducer, 20ft Range w/ 60ft Cable & Mounting Clamp (Ship Loose.)	Endress & Hauser	FMX21-FE221GGE21APO	1
96	F25-F27	Control	24VDC Fused Terminal Block With Indication	Phoenix Contact	3046090	3
97	F25-F27	Control	1/4A Fuse, Analog Inputs	Bussmann	GMA-250	3
98	TBPP,1,DC,P1, 1A, P2 & 2A	All	Terminal Block, Gray 26-10 AWG Wire	Phoenix Contact	3044102	161
99	TBPP,1,DC,P1, 1A, P2 & 2A	All	Terminal Block End Barrier	Phoenix Contact	3047028	8
100	TBPP,1,DC,P1, 1A, P2 & 2A	All	Terminal Block End Anchor	Phoenix Contact	0800886	17
101	TBP1A, TBP2A	Pump 1 & 2	Terminal Block, Gray 26-8 AWG Wire, TBVFD1A & TBVFD2A	Phoenix Contact	3044131	8
102	GND	Control	Control Panel Ground Bar	Square D	PK5GTA	1
103	-	-	Meter Socket (SHIP LOOSE)	Milbank	UAP9701-RRL	1
104	-	-	Stainless Steel 60' Float (SHIP LOOSE)	Anchor Scientific	P60NO-SST	2
105	-	-	Insulated Ground Neutral (SHIP LOOSE)	Square D	SN400LA	1
106	-	-	Ground Bar Kit (SHIP LOOSE)	Square D	PKDGT1250	1
107	-	-	NEMA 4A S.S. Disconnect (SHIP LOOSE)	Square D	J250DS	1
108	-	-	Antenna Mast Stabilization Plate (Ship Loose)	EWS	Custom	1
109	-	-	Stainless Steel 'U' Bolt, 2" Pole, 5/16" Diameter Bolt w/ 2-1/2" Threads (SHIP LOOSE)			1
110	-	-	5/16" Stainless Steel Flat Washer for 'U' Bolt (SHIP LOOSE)			2
111	-	-	5/16" Stainless Steel Lock Washer for 'U' Bolt (SHIP LOOSE)			2
112	-	-	5/16" Stainless Steel Nut for 'U' Bolt (SHIP LOOSE)			2
113	-	-	Stainless Steel 'U' Bolt, 1/4" Diameter (SHIP LOOSE)			2
114	-	-	1/4" Stainless Steel 1/4" Nut for 'U' Bolt (SHIP LOOSE)			4
115	-	-	1-1/4" Reduction Bushing for Antenna Tower, ROHN R-T850 (SHIP LOOSE)	Tessco	36892	1
116	PLC	Control	S7-200 Memory Module	Siemens	6ES7 291BGF230AX0	1
117	N	Power	Incoming Neutral Block	Square D	9080LBA163206	1
118	N	Power	Incoming Neutral Block Cover	Square D	9080LB31	1
119	N	Pump 1 & 2	Neutral Block	Square D	9080LBA161104	2
120	SPNL2	Power	32"X12" Aluminum Sidepanel	EWS	Custom	1
121	CT1-CT6	Pump 1 & 2	Current Transducer; 4-20mA; 10, 20 or 50A Range; Loop Powered	HK Technologies	AT1-420-24L-FF	6
122	DIS1, DIS2	Control	4 Digit Loop Powered Process Indicator; 4-20mA	Red Lion	CUB4LP40	2
123	SS5, SS6	Control	3 Position Selector Switch, 30MM	Square D	9001SX546BH2	2
124	FM	Control	Flow Meter	Endress & Hauser	50P Compact	1
125	PR	Control	Pressure Transmitter	Endress & Hauser	PMP71-AAC1PG1RAA	1

REVISIONS	BY

IMPROVEMENTS TO WASTEWATER COLLECTION SYSTEM

LIFT STATION CONSTRUCTION DETAILS

ELECTRICAL STANDARDS

FINAL SUBMITTAL

EMERALD COAST UTILITIES AUTHORITY

APPROVED BY:

Drawn	
Designed	
Checked	
Date	MAY '13
Scale	
Project No	
Sheet No.	10
	Of 18 Sheets

ALL WORK SHALL BE CONSTRUCTED IN ACCORDANCE WITH THE LATEST EDITION OF THE E.C.U.A. STANDARD SPECIFICATIONS

Horsepower Related Components Equipment List															
Item	Tag	240V Supply							208V Supply						
		Horsepower							Horsepower						
		1	2	3	5	7.5	10	15	1	2	3	5	7.5	10	15
Incoming Power Distribution Block PDB	PDB	9080LBA362101	9080LBA362101	9080LBA362101	9080LBA362101	9080LBA362101	9080LBA362101	9080LBA363101	9080LBA362101	9080LBA362101	9080LBA362101	9080LBA362101	9080LBA362101	9080LBA363101	9080LBA363101
Incoming Power Distribution Block PDB Cover	PDB	9080LB23	9080LB23	9080LB23	9080LB23	9080LB23	9080LB23	9080LB33	9080LB23	9080LB23	9080LB23	9080LB23	9080LB23	9080LB33	9080LB33
Main Circuit Breaker	CB1	HDL36060	HDL36060	HDL36070	HDL36090	HDL36110	HDL36125	HDL36175	HDL36045	HDL36050	HDL36060	HDL36090	HDL36110	HDL36150	HDL36200
Emergency Circuit Breaker	CB2	HDL36060	HDL36060	HDL36070	HDL36090	HDL36110	HDL36125	HDL36175	HDL36045	HDL36050	HDL36060	HDL36090	HDL36110	HDL36150	HDL36200
Generator Receptacle	GEN REC	ADR1044-RS	ADR1044-RS	ADR1044-RS	ADR1044-RS	AR20044RS	AR20044RS	AR20044RS	ADR1044-RS	ADR1044-RS	ADR1044-RS	ADR1044-RS	AR20044RS	AR20044RS	AR20044RS
Generator Plug	GEN REC	ACP1044CD-RS	ACP1044CD-RS	ACP1044CD-RS	ACP1044CD-RS	AP20044E-RS	AP20044E-RS	AP20044E-RS	ACP1044CD-RS	ACP1044CD-RS	ACP1044CD-RS	ACP1044CD-RS	AP20044E-RS	AP20044E-RS	AP20044E-RS
Main Power Distribution Block PDB1	PDB1	9080LBA363206	9080LBA363206	9080LBA363206	9080LBA363206	9080LBA363206	9080LBA363206	9080LBA365208	9080LBA363206	9080LBA363206	9080LBA363206	9080LBA363206	9080LBA363206	9080LBA365208	9080LBA365208
Main Power Distribution Block PDB1 Cover	PDB1	9080LB33	9080LB33	9080LB33	9080LB33	9080LB33	9080LB33	9080LB53	9080LB33	9080LB33	9080LB33	9080LB33	9080LB33	9080LB53	9080LB53
Starter Circuit Breaker	CB4, CB5	HDL36015	HDL36015	HDL36020	HDL36030	HDL36045	HDL36060	HDL36080	HDL36015	HDL36015	HDL36020	HDL36035	HDL36050	HDL36060	HDL36090
3 Phase FVNR Starter	M1, M2	8536SAO12V02	8536SBO12V02	8536SBO12V02	8536SCO12V02	8536SCO12V02	8536SDO12V02	8536SDO12V02	8536SAO12V02	8536SBO12V02	8536SBO12V02	8536SCO12V02	8536SCO12V02	8536SDO12V02	8536SEO12V02
Overloads	OL1, OL2	B6.25	B10.2	B14	B25	B36	B45	B79	B6.90	B11.5	B15.5	B28	B45	B56	CC74.6
Surge Arrestor	SA	SDLA3D1	SDLA3D1	SDLA3D1	SDLA3D1	SDLA3D1	SDLA3D1	SDLA3D1	SDLA3Y1	SDLA3Y1	SDLA3Y1	SDLA3Y1	SDLA3Y1	SDLA3Y1	SDLA3Y1

Conductor Tag		240V							208V						
		Horsepower							Horsepower						
		1	2	3	5	7.5	10	15	1	2	3	5	7.5	10	15
P-01, P-03 & P-04	Description	(3)#6	(3)#6	(3)#4	(3)#3	(3)#2	(3)#1	(3)#2/0	(3)#8	(3)#8	(3)#6	(3)#3	(3)#2	(3)#1/0	(3)#2/0
	Manufacturer	N/A	N/A	N/A	N/A	N/A	N/A	N/A	N/A	N/A	N/A	N/A	N/A	N/A	N/A
	Catalog #	N/A	N/A	N/A	N/A	N/A	N/A	N/A	N/A	N/A	N/A	N/A	N/A	N/A	N/A
	Length (Ft. Max)	N/A	N/A	N/A	N/A	N/A	N/A	N/A	N/A	N/A	N/A	N/A	N/A	N/A	N/A
	Cable Dia (in)	0.254"	0.254"	0.324"	0.352"	0.384"	0.446"	0.532"	0.216"	0.216"	0.254"	0.352"	0.384"	0.486"	0.532"
	Appleton Connector	(3) -CG-1850	(3) -CG-1850	(3) -CG-3150	(3) -CG-3150	(3) -CG-3150	(3)-CG-3775	(3) -CG-5075	(3) -CG-1850	(3) -CG-1850	(3) -CG-1850	(3) -CG-3150	(3) -CG-3150	(3) -CG-3775	(3) -CG-5075
	Connector Range	0.187"-0.312"	0.187"-0.312"	0.312"-0.437"	0.312"-0.437"	0.312"-0.437"	0.375"-0.500"	0.500"-0.625"	0.187"-0.312"	0.187"-0.312"	0.187"-0.312"	0.312"-0.437"	0.312"-0.437"	0.375"-0.500"	0.500"-0.625"
	Meyers Hub	(3) 1/2" - STA-1	(3) 1/2" - STA-1	(3) 1/2" - STA-1	(3) 1/2" - STA-1	(3) 1/2" - STA-1	(3) 3/4" - STA-2	(3) 3/4" - STA-2	(3) 1/2" - STA-1	(3) 1/2" - STA-1	(3) 1/2" - STA-1	(3) 1/2" - STA-1	(3) 1/2" - STA-1	(3) 3/4" - STA-2	(3) 3/4" - STA-2
P-02A	Description	(1)#10	(1)#10	(1)#8	(1)#8	(1)#6	(1)#6	(1)#6	(1)#10	(1)#10	(1)#10	(1)#8	(1)#6	(1)#6	(1)#6
	Manufacturer	N/A	N/A	N/A	N/A	N/A	N/A	N/A	N/A	N/A	N/A	N/A	N/A	N/A	N/A
	Catalog #	N/A	N/A	N/A	N/A	N/A	N/A	N/A	N/A	N/A	N/A	N/A	N/A	N/A	N/A
	Length (Ft. Max)	N/A	N/A	N/A	N/A	N/A	N/A	N/A	N/A	N/A	N/A	N/A	N/A	N/A	N/A
	Cable Dia (in)	0.164"	0.164"	0.216"	0.216"	0.254"	0.254"	0.254"	0.164"	0.164"	0.164"	0.216"	0.254"	0.254"	0.254"
	Appleton Connector	(1)-GC-1250	(1)-GC-1250	(1)-GC-1850	(1)-GC-1850	(1)-GC-1850	(1)-GC-1850	(1)-GC-1850	(1)-GC-1250	(1)-GC-1250	(1)-GC-1250	(1)-GC-1850	(1)-GC-1850	(1)-GC-1850	(1)-GC-1850
	Connector Range	0.125"-0.187"	0.125"-0.187"	0.187"-0.312"	0.187"-0.312"	0.187"-0.312"	0.187"-0.312"	0.187"-0.312"	0.125"-0.187"	0.125"-0.187"	0.125"-0.187"	0.187"-0.312"	0.187"-0.312"	0.187"-0.312"	0.187"-0.312"
	Hub	(1) 1/2" - STA-1	(1) 1/2" - STA-1	(1) 1/2" - STA-1	(1) 1/2" - STA-1	(1) 1/2" - STA-1	(1) 1/2" - STA-1	(1) 1/2" - STA-1	(1) 1/2" - STA-1	(1) 1/2" - STA-1	(1) 1/2" - STA-1	(1) 1/2" - STA-1	(1) 1/2" - STA-1	(1) 1/2" - STA-1	(1) 1/2" - STA-1
P-02B	Description	(1)#10	(1)#10	(1)#8	(1)#8	(1)#6	(1)#6	(1)#6	(1)#10	(1)#10	(1)#10	(1)#8	(1)#6	(1)#6	(1)#6
	Manufacturer	Southwire	Southwire	Southwire	Southwire	Southwire	Southwire	Southwire	Southwire	Southwire	Southwire	Southwire	Southwire	Southwire	Southwire
P-05 & P-06	Description	(3)#6	(3)#6	(3)#4	(3)#3	(3)#2	(3)#1	(3)#2/0	(3)#8	(3)#8	(3)#6	(3)#3	(3)#2	(3)#1/0	(3)#2/0
	Manufacturer	Southwire	Southwire	Southwire	Southwire	Southwire	Southwire	Southwire	Southwire	Southwire	Southwire	Southwire	Southwire	Southwire	Southwire
	Catalog #	N/A	N/A	N/A	N/A	N/A	N/A	N/A	N/A	N/A	N/A	N/A	N/A	N/A	N/A
	Length (Ft. Max)	N/A	N/A	N/A	N/A	N/A	N/A	N/A	N/A	N/A	N/A	N/A	N/A	N/A	N/A
	Cable Dia (in)	0.254"	0.254"	0.324"	0.352"	0.384"	0.446"	0.532"	0.216"	0.216"	0.254"	0.352"	0.384"	0.486"	0.532"
	Appleton Connector	(3) -CG-1850	(3) -CG-1850	(3) -CG-3150	(3) -CG-3150	(3) -CG-3150	(3)-CG-3775	(3) -CG-5075	(3) -CG-1850	(3) -CG-1850	(3) -CG-1850	(3) -CG-3150	(3) -CG-3150	(3) -CG-3775	(3) -CG-5075
	Connector Range	0.187"-0.312"	0.187"-0.312"	0.312"-0.437"	0.312"-0.437"	0.312"-0.437"	0.375"-0.500"	0.500"-0.625"	0.187"-0.312"	0.187"-0.312"	0.187"-0.312"	0.312"-0.437"	0.312"-0.437"	0.375"-0.500"	0.500"-0.625"
	Hub	(3) 1/2" - STA-1	(3) 1/2" - STA-1	(3) 1/2" - STA-1	(3) 1/2" - STA-1	(3) 1/2" - STA-1	(3) 3/4" - STA-2	(3) 3/4" - STA-2	(3) 1/2" - STA-1	(3) 1/2" - STA-1	(3) 1/2" - STA-1	(3) 1/2" - STA-1	(3) 1/2" - STA-1	(3) 3/4" - STA-2	(3) 3/4" - STA-2
P-07 & P-09	Description	(5)#14 TC	(5)#14 TC	(5)#14 TC	(5)#14 TC	(5)#10 TC	(5)#10 TC	(4)#6 W/G, TC	(5)#14 TC	(5)#14 TC	(5)#14 TC	(5)#12 TC	(5)#10 TC	(4)#8 W/G, TC	(4)#6 W/G, TC
	Manufacturer	Houston Wire	Houston Wire	Houston Wire	Houston Wire	Houston Wire	Houston Wire	Houston Wire	Houston Wire	Houston Wire	Houston Wire	Houston Wire	Houston Wire	Houston Wire	Houston Wire
	Catalog #	HW151 01405	HW151 01405	HW151 01405	HW151 01405	HW151 01005	HW151 01005	HW 154 00604	HW151 01405	HW151 01405	HW151 01405	HW151 01205	HW151 01005	HW 154 00804	HW 154 00604
	Length (Ft. Max)	19 FT	19 FT	19 FT	19 FT	19 FT	19 FT	19 FT	19 FT	19 FT	19 FT	19 FT	19 FT	19 FT	19 FT
	Cable Dia (in)	0.41"	0.41"	0.41"	0.41"	0.58"	0.58"	0.76"	0.41"	0.41"	0.41"	0.46"	0.58"	0.61"	0.76"
	Appleton Connector	(2) -CG-3150	(2) -CG-3150	(2) -CG-3150	(2) -CG-3150	(2) -CG-5075	(2) -CG-5075	(2) - CG-7575	(2) -CG-3150	(2) -CG-3150	(2) -CG-3150	(2) -CG-3750	(2) -CG-5075	(2) -CG-5075	(2) - CG-7575
	Connector Range	0.312"-0.437"	0.312"-0.437"	0.312"-0.437"	0.312"-0.437"	0.500"-0.625"	0.500"-0.625"	0.750"-0.875"	0.312"-0.437"	0.312"-0.437"	0.312"-0.437"	0.375"-0.500"	0.500"-0.625"	0.500"-0.625"	0.750"-0.875"
	Hub	(2) 1/2" - STA-1	(2) 1/2" - STA-1	(2) 1/2" - STA-1	(2) 1/2" - STA-1	(2) 3/4" - STA-2	(2) 3/4" - STA-2	(2) 3/4" - STA-2	(2) 1/2" - STA-1	(2) 1/2" - STA-1	(2) 1/2" - STA-1	(2) 1/2" - STA-1	(2) 3/4" - STA-2	(2) 3/4" - STA-2	(2) 3/4" - STA-2
P-08 & P-10	Description	(3)#14	(3)#14	(3)#14	(3)#14	(3)#10	(3)#10	(3)#6	(3)#14	(3)#14	(3)#14	(3)#12	(3)#10	(3)#8	(3)#6
	Manufacturer	Southwire	Southwire	Southwire	Southwire	Southwire	Southwire	Southwire	Southwire	Southwire	Southwire	Southwire	Southwire	Southwire	Southwire

REVISIONS	BY

IMPROVEMENTS TO WASTEWATER COLLECTION SYSTEM

LIFT STATION CONSTRUCTION DETAILS

ELECTRICAL STANDARDS

FINAL SUBMITTAL

EMERALD COAST UTILITIES AUTHORITY

APPROVED BY:

Drawn:
Designed:
Checked:
Date: MAY '13
Scale:
Project No.
Sheet No. 11
Of 18 Sheets

ALL WORK SHALL BE CONSTRUCTED IN ACCORDANCE WITH THE LATEST EDITION OF THE E.C.U.A. STANDARD SPECIFICATIONS

Power & Control Conductors, CGB's and Hubs

Cable Number	Description	Manufacturer	Catalog Numer	Length (Ft. Max)	Cable Diameter	Appleton Liquidtight Cable Connector	Connector Cable Range	Crouse-Hinds Myers Hub	From Panel/Enclosure	To Panel/Enclosure
P-14	(1) #8 AWG	N/A	N/A	AS REQ'D	N/A	N/A	N/A	N/A	Field	Power Panel
P-15	3-1/C #12 AWG	N/A	N/A	AS REQ'D	N/A	N/A	N/A	N/A	Power Panel	Power Panel
P-16	3-1/C #12 AWG	N/A	N/A	AS REQ'D	N/A	N/A	N/A	N/A	Power Panel	Power Panel
C-01	(16) #14 AWG, Tray Cable	Houston Wire & Cable	HW 151 01416	24 FT	0.68"	(2) - CG-6275	0.625"-0.750"	(2) 3/4" - STA-2	Power Panel	Control Panel
C-02	(5) #14 AWG, Tray Cable	Houston Wire & Cable	HW 151 01405	19 FT	0.41"	(2) - CG-3750	0.375"-0.500"	(2) 1/2" - STA-1	Power Panel	Pump 1 Panel
C-03	(16) #14 AWG, Tray Cable	Houston Wire & Cable	HW 151 01416	22 FT	0.68"	(2) - CG-6275	0.625"-0.750"	(2) 3/4" - STA-2	Pump 2 Panel	Control Panel
C-04	1 Pair #16 SH, Tray Cable	Houston Wire & Cable	HW 120 01601	22 FT	0.33"	(2) - CG-2575	0.250"-0.375"	(2) 3/4" - STA-2	Pump 1 Panel	Control Panel
C-05	1 Pair #16 SH, Tray Cable	Houston Wire & Cable	HW 120 01601	22 FT	0.33"	(2) - CG-2575	0.250"-0.375"	(2) 3/4" - STA-2	Pump 2 Panel	Control Panel
PUMP 1-PWR	Per Mfg Specs	N/A	N/A	N/A	N/A	CG Series based on Mfg Specs	N/A	STA Series based on Mfg Specs	Field	Pump 1 Panel
PUMP 1-MTP	Per Mfg Specs	N/A	N/A	N/A	N/A	CG Series based on Mfg Specs	N/A	STA Series based on Mfg Specs	Field	Pump 1 Panel
PUMP 1-SF	Per Mfg Specs	N/A	N/A	N/A	N/A	CG Series based on Mfg Specs	N/A	STA Series based on Mfg Specs	Field	Pump 1 Panel
PUMP 2-PWR	Per Mfg Specs	N/A	N/A	N/A	N/A	CG Series based on Mfg Specs	N/A	STA Series based on Mfg Specs	Field	Pump 2 Panel
PUMP 2-MTP	Per Mfg Specs	N/A	N/A	N/A	N/A	CG Series based on Mfg Specs	N/A	STA Series based on Mfg Specs	Field	Pump 2 Panel
PUMP 2-SF	Per Mfg Specs	N/A	N/A	N/A	N/A	CG Series based on Mfg Specs	N/A	STA Series based on Mfg Specs	Field	Pump 2 Panel
Float Switch 1	Float Switch Cable	BY OTHERS	N/A	N/A	0.56"	(1) - CG-5050	0.500"-0.625"	(1) 1/2" - STA-1	Field	Control Panel
Float Switch 2	Float Switch Cable	BY OTHERS	N/A	N/A	0.56"	(1) - CG-5050	0.500"-0.625"	(1) 1/2" - STA-1	Field	Control Panel
Pressure Xducer	Pressure Transducer Cable	BY OTHERS	N/A	N/A	0.35"	(1) - G-3150	0.312"-0.437"	(1) 1/2" - STA-1	Field	Control Panel
Antenna COAX	Coaxial Cable	BY OTHERS	N/A	N/A	0.408"	(1) - CG-3750	0.375"-0.500"	(1) 1/2" - STA-1	Field	Control Panel

REVISIONS	BY

IMPROVEMENTS TO WASTEWATER COLLECTION SYSTEM

LIFT STATION CONSTRUCTION DETAILS

ELECTRICAL STANDARDS

FINAL SUBMITTAL

ECUA
EMERALD COAST UTILITIES AUTHORITY

APPROVED BY:

Drawn:
Designed:
Checked:
Date: MAY '13
Scale:
Project No:
Sheet No. 12
Of 18 Sheets

ALL WORK SHALL BE CONSTRUCTED IN ACCORDANCE WITH THE LATEST EDITION OF THE E.C.U.A. STANDARD SPECIFICATIONS

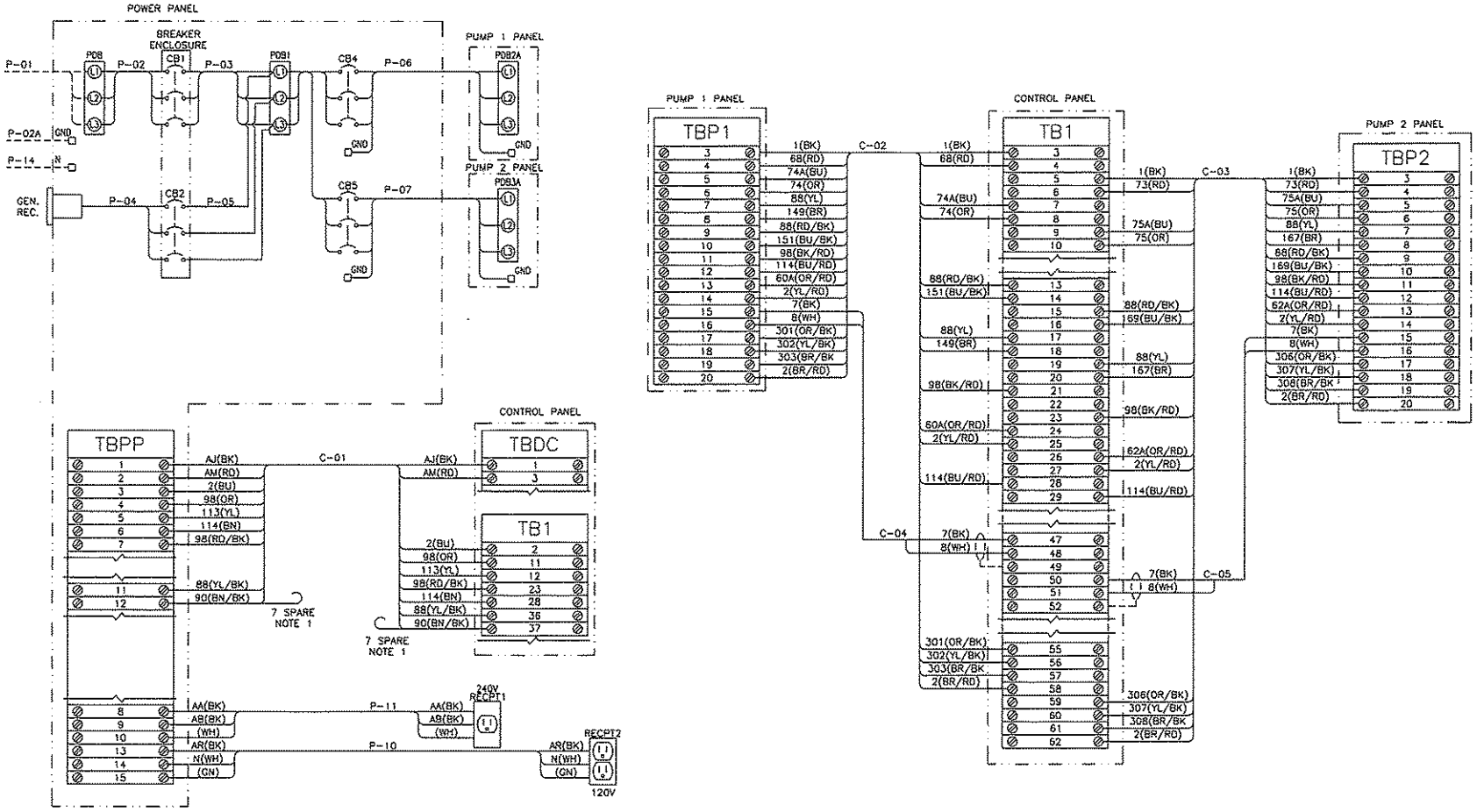

NOTES:

1) ALL SPARE WIRE WILL BE CLEARLY LABELED WITH THE CABLE NUMBER & A SPARE DESIGNATION ON INDIVIDUAL WIRES. THESE SPARES WILL BE LONG ENOUGH TO REACH ANY POINT IN THE PANEL.
2) SPARE CONDUCTORS SHOULD BE TRIMMED AND HEAT SHRINK SHOULD BE USED TO SECURE THE SPARE CONDUCTORS IN THE CABLE.
3) THE INNER CONNECTING CONDUCTORS BETWEEN THE PANELS ARE CODED AS FOLLOWS: THE FIRST GROUP OF CHARACTER IS THE WIRE NUMBER AND THE SECOND GROUP IS THE COLOR (I.E. 1(BK) SIGNIFIES THAT THE WIRE NUMBER IS 1 AND THE COLOR IS BLACK). WIRE COLOR CODE AS FOLLOWS: BK-BLACK, RD-RED, BU-BLUE, OR-ORANGE, YL-YELLOW, BN-BROWN. FOR COLORS THAT ARE DENOTED AS XX/YY, XX IS THE BASE COLOR AND YY IS THE SPIRAL STRIPE (I.E. RD/BK IS A RED WIRE WITH A BLACK SPIRAL STRIPE).
4) SEE SHEETS 11 & 12 FOR PANEL TO PANEL INNER CONNECTING CONDUCTOR AND CABLE DETAILS.

REVISIONS	BY

IMPROVEMENTS TO WASTEWATER COLLECTION SYSTEM

LIFT STATION CONSTRUCTION DETAILS

ELECTRICAL STANDARDS

FINAL SUBMITTAL

ECUA EMERALD COAST UTILITIES AUTHORITY

APPROVED BY:

Drawn:
Designed:
Checked:
Date: MAY '13
Scale:
Project No:
Sheet No. 13
OF 18 Sheets

ALL WORK SHALL BE CONSTRUCTED IN ACCORDANCE WITH THE LATEST EDITION OF THE E.C.U.A. STANDARD SPECIFICATIONS

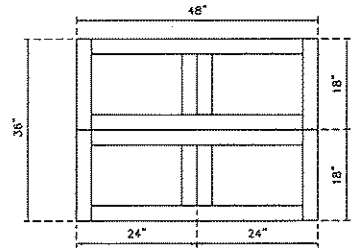

TOP VIEW

NOTES:

1. TOP AND BOTTOM OF BASE TO BE LEFT OPEN.
2. DRILL TOP OF BASE TO ATTACH ENCLOSURES AS REQUIRED.
3. DRILL BOTTOM OF BASE TO ATTACH TO SLAB AS REQUIRED.

ATTENTION

THIS LAYOUT IS ONE OF TWO (2) POSSIBLE CHOICES – SEE SHEET 14 FOR THE OTHER OPTION. IF THIS LAYOUT OPTION IS SELECTED, SEE SHEET 7A FOR ASSOCIATED PANEL LAYOUT DETAILS.

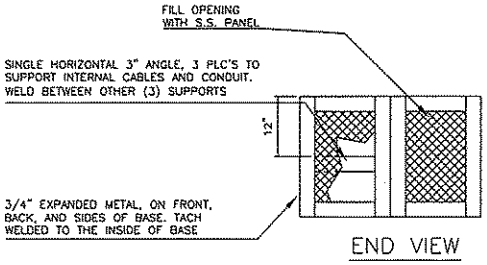

END VIEW

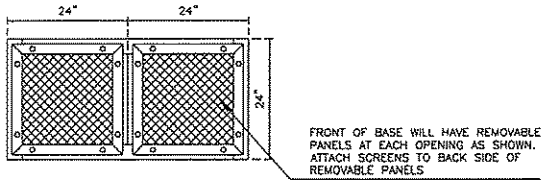

FRONT VIEW

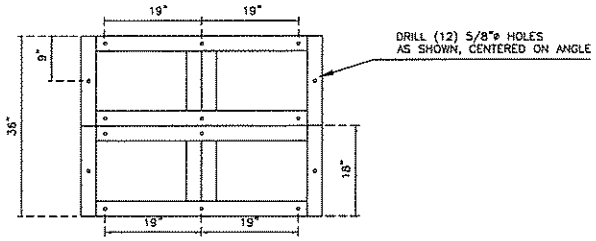

BOTTOM VIEW

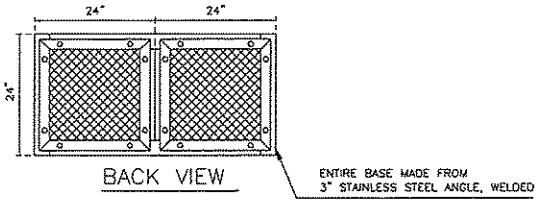

BACK VIEW

REVISIONS	BY

IMPROVEMENTS TO WASTEWATER COLLECTION SYSTEM

LIFT STATION CONSTRUCTION DETAILS

ELECTRICAL STANDARDS

FINAL SUBMITTAL

EMERALD COAST UTILITIES AUTHORITY

APPROVED BY:

Drawn	
Designed	
Checked	
Date	MAY '13
Scale	
Project No	
Sheet No.	14A
	OF 18 Sheets

ALL WORK SHALL BE CONSTRUCTED IN ACCORDANCE WITH THE LATEST EDITION OF THE E.C.U.A. STANDARD SPECIFICATIONS

Power Panel Fuse Schedule				
Fuse	Type	Voltage	Amps	Description
F1	KTK-R-1	600	1A	Phase Monitor A Phase
F2	KTK-R-1	600	1A	Phase Monitor B Phase
F3	KTK-R-1	600	1A	Phase Monitor C Phase
F6	AGC-3	250	3A	Power Supply 1 Primary
F7	AGC-3	250	3A	Power Supply 2 Primary

Pump 1 Panel Fuse Schedule				
Fuse	Type	Voltage	Amps	Description
F4	AGC-1	250	1A	Pump 1 Control Power

Pump 2 Panel Fuse Schedule				
Fuse	Type	Voltage	Amps	Description
F5	AGC-1	250	1A	Pump 2 Control Power

Control Panel Fuse Schedule				
Fuse	Type	Voltage	Amps	Description
F8	AGC-10	250	10A	Power Supply 1 Secondary
F9	AGC-10	250	10A	Power Supply 2 Secondary
F10	AGC-10	250	10A	Control Power
F11	AGC-10	250	10A	Batteries
F12	AGC-2	250	2A	Radio Power Supply Primary
F13	AGC-2	250	2A	Radio Power Supply Secondary
F14	AGC-1/4	250	1/4A	Pump 1 Motor Thermal
F15	AGC-1/4	250	1/4A	Pump 2 Motor Thermal
F16	AGC-1/10	250	1/10A	Operator Interface
F17	AGC-1	250	1A	Digital Inputs 0.0-1.4
F18	AGC-1	250	1A	Digital Inputs 1.5-2.7
F19	AGC-2	250	2A	Digital Outputs 0.0-0.7
F20	AGC-2	250	2A	Digital Outputs 1.0-1.7
F21	AGC-1-1/2	250	1-1/2A	PLC Power
F22	AGC-3/4	250	3/4A	Process Transmitter Supply
F23	AGC-1/10	250	1/10A	Analog Inputs
F24	AGC-3/10	250	1/10A	Analog Outputs
F25	GMA-1/4	250	1/4A	Analog Input 2
F26	GMA-1/4	250	1/4A	Analog Input 3
F27	GMA-1/4	250	1/4A	Analog Input 4

HMI BUTTON LEGEND	
F1	FAULT RESET/ENABLE INTRUSION
SHIFT+F1	DISABLE INTRUSION
F2	ALTERNATE PUMP ASSIGNMENTS
F3	RESET PUMP 1 RUNTIME
SHIFT+F3	RESET PUMP 2 RUNTIME
F4	ALARMS SCREEN
F5	OVERVIEW SCREEN
F6	PUMP 1 SCREEN
F7	PUMP 2 SCREEN
F8	SETPOINTS SCREEN

CONTROL PANEL ISR INFORMATION TAGS

THIS AREA IN BLUE IS FOR INTRINSICALLY SAFE CIRCUITS AND DEVICES ONLY. THIS AREA INCLUDES THE AIR SPACE DIRECTLY IN FRONT OF THE BLUE AREA BETWEEN THE BACKPANEL AND THE ENCLOSURE WALLS AND DOOR INCLUDING THE BOTTOM OF THE ENCLOSURE. ONLY INTRINSICALLY SAFE DEVICES AND WIRING ARE ALLOWED IN THIS AREA. DO NOT ROUTE NON-INTRINSICALLY SAFE WIRING THROUGH THIS AREA OF ENCLOSURE.

WARNING

SUBSTITUTION OF COMPONENTS MAY IMPAIR INTRINSIC SAFETY

CONTROL PANEL EXTERIOR TAG INFORMATION

WARNING

TO PREVENT IGNITION OF FLAMMABLE OR COMBUSTIBLE ATMOSPHERES DISCONNECT POWER BEFORE SERVICING

PROVIDES INTRINSICALLY SAFE CIRCUIT EXTENSIONS FOR USE IN CLASS 1, GROUPS A, B, C, AND D WHEN CONNECTED PER REFERENCE DRAWINGS ON MAIN NAMEPLATE LABEL

CONTROL PANEL DEADFRONT TAG INFORMATION

SECURELY FASTEN ALL INNER DOOR LATCHES BEFORE CLOSING OUTER DOOR. FAILURE TO FOLLOW THESE INSTRUCTIONS COULD CAUSE THE OUTER DOOR TO JAM WHEN RE-OPENED

240V Nameplate Data							
Total Load (FLA)	46	51	57	68	82	94	122
Motor Hp	1	2	9.6	15.2	22	28	42
Motor FLA	4.2	6.8	4.8	7.6	11	14	21

208V Nameplate Data							
Total Load (FLA)	31	37	44	57	72	86	118
Motor Hp	1	2	3	5	7.5	10	15
Motor FLA	4.8	7.8	11	17.5	25.3	32.2	48.3

Torque Rating Table														
	240V Supply							208V Supply						
	Horsepower							Horsepower						
Component	1	2	3	5	7.5	10	15	1	2	3	5	7.5	10	15
Incoming Distribution Block (PDB1)	120lb-in/13.5N-m	120lb-in/13.5N-m	120lb-in/13.5N-m	120lb-in/13.5N-m	120lb-in/13.5N-m	120lb-in/13.5N-m	275lb-in/31.0N-m	40lb-in/4.5N-m	40lb-in/4.5N-m	120lb-in/13.5N-m	120lb-in/13.5N-m	120lb-in/13.5N-m	275lb-in/31.0N-m	275lb-in/31.0N-m
Incoming Neutral Block	40lb-in/4.5N-m	40lb-in/4.5N-m	40lb-in/4.5N-m	40lb-in/4.5N-m	40lb-in/4.5N-m	40lb-in/4.5N-m	40lb-in/4.5N-m	40lb-in/4.5N-m	40lb-in/4.5N-m	40lb-in/4.5N-m	40lb-in/4.5N-m	40lb-in/4.5N-m	40lb-in/4.5N-m	40lb-in/4.5N-m
Main Ground Block	20lb-in/2.2N-m	20lb-in/2.2N-m	20lb-in/2.2N-m	25lb-in/2.8N-m	35lb-in/4.0N-m	35lb-in/4.0N-m	35lb-in/4.0N-m	20lb-in/2.2N-m	20lb-in/2.2N-m	20lb-in/2.2N-m	25lb-in/2.8N-m	35lb-in/4.0N-m	35lb-in/4.0N-m	35lb-in/4.0N-m
Motor Distribution Block (PDB2 & 3)	35lb-in/4.0N-m	35lb-in/4.0N-m	35lb-in/4.0N-m	35lb-in/4.0N-m	35lb-in/4.0N-m	35lb-in/4.0N-m	120lb-in/13.5N-m	35lb-in/4.0N-m	35lb-in/4.0N-m	35lb-in/4.0N-m	35lb-in/4.0N-m	35lb-in/4.0N-m	40lb-in/4.5N-m	120lb-in/13.5N-m
Motor Ground Block	20lb-in/2.2N-m	20lb-in/2.2N-m	20lb-in/2.2N-m	20lb-in/2.2N-m	20lb-in/2.2N-m	20lb-in/2.2N-m	35lb-in/4.0N-m	20lb-in/2.2N-m	20lb-in/2.2N-m	20lb-in/2.2N-m	20lb-in/2.2N-m	20lb-in/2.2N-m	35lb-in/4.0N-m	35lb-in/4.0N-m

REVISIONS	BY

IMPROVEMENTS TO WASTEWATER COLLECTION SYSTEM

LIFT STATION CONSTRUCTION DETAILS

ELECTRICAL STANDARDS

FINAL SUBMITTAL

EMERALD COAST UTILITIES AUTHORITY

APPROVED BY:

Drawn:
Designed:
Checked:
Date: MAY '13
Scale:
Project No:
Sheet No. 15
of 18 Sheets

ALL WORK SHALL BE CONSTRUCTED IN ACCORDANCE WITH THE LATEST EDITION OF THE E.C.U.A. STANDARD SPECIFICATIONS

HAZARDOUS (CLASSIFIED) LOCATION	NON-HAZARDOUS LOCATION
CLASS I, ZONE 0 OR 1, GROUPS IIC, IIB, IIA or CLASS I, DIVISION 1, GROUPS A,B,C,D CLASS II, DIVISION 1, GROUPS E,F,G CLASS III, DIVISION 1	CLASS I, ZONE 2, GROUPS IIC, IIB, IIA or CLASS I, DIVISION 2, GROUPS A,B,C,D

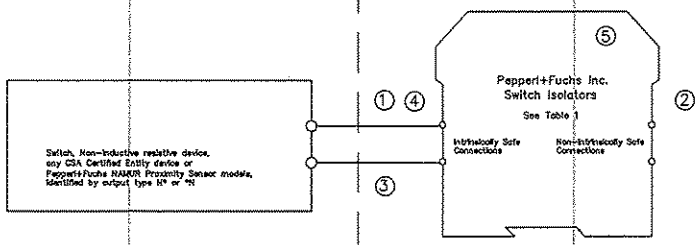

Notes:

① The intrinsically safe wiring must be installed in accordance with the Canadian Electrical Code CSA C22.1, Part 1, Appendix F.

② Barriers listed in Table 1 shall not be connected to any device that uses or generates in excess of 250Vrms or DC unless it has been determined that the voltage is adequately isolated from the barrier. Barriers listed in Table 2 shall not be connected to any device that uses or generates in excess of 60Vrms or DC unless the voltage is limited by an adequate means.

③ Any combination of up to 10 channels of the barriers listed in Table 1 or Table 2 may be connected in parallel and connected to a switch in a hazardous location.

④ The Entity concept allows interconnection of intrinsically safe apparatus with associated apparatus not specifically examined in combination as a system when the approved values of Voc and Isc for the associated apparatus are less than or equal to Vmax and Imax for the intrinsically safe apparatus and the approved values of Ca and La for the associated apparatus are greater than Ci + Ccable and Li + Lcable, respectively, for the intrinsically safe apparatus.

⑤ The following models with part number greater than 100000 are approved for mounting in a Class I, Zone 2, Groups IIC,IIB,IIA or Class I, Division 2, Groups A,B,C,D hazardous (classified) location: KF**-SR2-EX1.W, KF**-SR2-EX1.W.LB, KF**-SR2-EX2.W, KFD2-SR2-EX2.2S, KFD2-ST2-EX1.*, KFD2-ST2-EX2.*, KFD2-SOT2-EX1.*, KFD2-SOT2-EX2.*.

WARNING: Substitution of components may impair intrinsic safety and/or suitability for use in Class I, Division 2, Groups A,B,C,D or Class I, Zone 2, Groups IIC,IIB,IIA.
AVERTISSEMENT: La substitution de composants peut compromettre la sécurité intrinsèque.

TABLE 1: Barriers Certified to CSA Standard C22.2 No. 157 (Um = 250 V)

Model Numbers	Terminals	SYSTEM V_{max}(V)	SYSTEM Res. (Ω)	ENTITY V_{oc} (V)	ENTITY I_{sc}(mA)	ENTITY C_a(uF) GRPS A,B	ENTITY C_a(uF) GRPS C,E	ENTITY C_a(uF) GRPS D,F,G	ENTITY L_a(mH) GRPS A,B	ENTITY L_a(mH) GRPS C,E	ENTITY L_a(mH) GRPS D,F,G
KFD2-SOT-Ex1*,KFD2-SOT-Ex2* KFD2-SR-Ex1*,KFD2-SR-Ex2* KFD2-SRT-Ex1* KFD2-ST-Ex1*,KFD2-ST-Ex2* KFA5-SR2-Ex1*,KFA5_SR2-Ex2* KFA6-SR2-Ex1*,KFA6-SR2-Ex2* KFD2-SR2-Ex1*,KFD2-SR2-Ex2*	1-3, 2-3; 4-6, 5-6	12.6	650	12.9	19.8	1.273	3.820	10.18	84.88	298.7	744.4
KFA5-SOT2-Ex1*,KFA5-SOT2-Ex2* KFA6-SOT2-Ex1*,KFA6-SOT2-Ex2*	1-3, 2-3; 4-6, 5-6	10.5	811	10.5	13.0	2.66	7.9	21.3	192	671	1000

TABLE 2: Barriers Certified to CSA Standard E79-11 (Um = 60 V)

Model Numbers	Terminals	Load Parameters U_o (V_{oc})	I_o (I_{sc})	C_o(uF) GRPS IIC (A,B)	C_o(uF) GRPS IIB (C,E)	C_o(uF) GRPS IIA (D,F,G)	L_o(mH) GRPS IIC (A,B)	L_o(mH) GRPS IIB (C,E)	L_o(mH) GRPS IIA (D,F,G)
KFD2-SOT2-Ex1*,KFD2-SOT2-Ex2* KFD2-ST2-Ex1*,KFD2-ST2-Ex2*	1-3, 2-3; 4-6, 5-6	10.5	13.0	2.66	7.9	21.3	192	671	1000

Revisions	ECO No.						
2-20-2008							
In.	Date	Cons.	Resp.	Appr.			

No changes without prior permission CSA

THIS DRAWING CONTAINS PROPRIETARY DATA. NO DISCLOSURE, REPRODUCTION, OR USE OF ANY PART MAY BE MADE EXCEPT BY WRITTEN PERMISSION.

Pepperl+Fuchs® Inc. Twinsburg, OH 44087-2202

Repl. No. –

Title Installation Drawing for CSA Certified Switch Isolators

Draw. No. 116-0047j

Sh. 1 of 2

Revisions ECO No.
2-20-2008
In. Date Cons. Resp. Appr.
No changes without prior permission CSA
THIS DRAWING CONTAINS PROPRIETARY DATA. NO DISCLOSURE, REPRODUCTION, OR USE OF ANY PART MAY BE MADE EXCEPT BY WRITTEN PERMISSION.
Pepperl+Fuchs® Inc. Twinsburg, OH 44087-2202
Repl. No. –
Title Installation Drawing for CSA Certified Switch Isolators
Draw. No. 116-0047j

Sh. 2 of 2

REVISIONS	BY

IMPROVEMENTS TO WASTEWATER COLLECTION SYSTEM

LIFT STATION CONSTRUCTION DETAILS

ELECTRICAL STANDARDS

FINAL SUBMITTAL

EMERALD COAST UTILITIES AUTHORITY

APPROVED BY:

Drawn:
Designed:
Checked:
Date: MAY '13
Scale:
Project No:
Sheet No. 16
OF 18 Sheets

GENERAL ELECTRICAL NOTES

NEW WORK:

1. ENTIRE ELECTRICAL INSTALLATION SHALL BE IN ACCORDANCE WITH THE LATEST EDITION (UNLESS NOTED OTHERWISE) OF THE FOLLOWING CODES AND STANDARDS:
   1.1. NATIONAL ELECTRICAL CODE (NFPA 70).
   1.2. STANDARD FOR FIRE PROTECTION IN WASTEWATER TREATMENT AND COLLECTION FACILITIES (NFPA 820).
2. THE CONTRACTOR SHALL BE RESPONSIBLE FOR READING ALL PROJECT SPECIFICATIONS AND WILL BE RESPONSIBLE FOR MEETING ALL REQUIREMENTS OUTLINED IN THE SPECIFICATIONS.
3. CONTRACTOR SHALL COORDINATE ALL WORK WITH OTHER TRADES PRIOR TO ROUGH-IN AND INSTALLATION.
4. WORKING SPACE FOR ALL ELECTRICAL AND CONTROL EQUIPMENT OPERATING AT 600V VOLTS OR LESS TO GROUND AND LIKELY TO REQUIRE EXAMINATION, ADJUSTMENT, SERVICING, OR MAINTENANCE WHILE ENERGIZED SHALL COMPLY WITH NEC, ARTICLE 110.26.
5. THE ELECTRICAL DESIGN PROVIDES A NUMBER OF BRANCH CIRCUITS, AMPACITY AND OVERCURRENT PROTECTION FOR OTHER DIVISIONS DESIGN BASIS EQUIPMENT CONFORMING TO MANUFACTURER'S SPECIFICATIONS AVAILABLE AT TIME OF DESIGN. THE CONTRACTOR SHALL VERIFY ALL EQUIPMENT LOADS PRIOR TO ROUGH-IN. IF REQUIREMENTS OF EQUIPMENT ACTUALLY PROVIDED UNDER CONTRACT FOR CONSTRUCTION ARE DIFFERENT, CONTRACTOR SHALL MAKE ALL CHANGES NECESSARY WITHOUT INCREASE IN THE CONTRACT AMOUNT. SUCH CHANGES SHALL BE BASED UPON REQUIREMENTS, NAMEPLATE VALUES AND CODE REQUIREMENTS, WHICHEVER IS MORE STRINGENT, AND MAY INCLUDE, BUT ARE NOT LIMITED TO: SIZE OF CONDUCTORS, SIZE OF CONDUIT, QUANTITY OF CONDUCTORS AND CONDUITS, TYPE AND SIZE OF CIRCUIT BREAKER OR DISCONNECT, OVERLOADS, FULL-VOLTAGE STARTERS, REDUCED VOLTAGE SOFT STARTERS, VARIABLE FREQUENCY DRIVES, AND FUSE PROTECTION.
6. THE ELECTRICAL CONTRACTOR IS REQUIRED TO COORDINATE, PROVIDE, AND INSTALL A FULLY OPERATIONAL AND CODE COMPLIANT ELECTRICAL SYSTEM. THIS MAY INCLUDE THE ADDITION OF ELECTRICAL ITEMS NOT SHOWN ON THE ELECTRICAL PLANS, BUT REQUIRED FOR SYSTEM OPERATION.
7. CONTRACTOR SHALL COORDINATE INSTALLATION OF ELECTRICAL SERVICE WITH ELECTRICAL UTILITY COMPANY PROVIDING ELECTRICAL SERVICE TO FACILITY. CONTRACTOR SHALL PAY ALL FEES ASSESSED BY ELECTRICAL UTILITY COMPANY TO PROVIDE ELECTRICAL SERVICE TO FACILITY.
8. CONTRACTOR SHALL EXCAVATE AND CONDUCT DEMOLITION SO AS TO AVOID DAMAGE TO EXISTING UTILITIES AND OTHER UNDERGROUND OR CONCEALED ITEMS. IF EXISTING OR NEW ITEMS ARE DAMAGED, THE CONTRACTOR SHALL NOTIFY THE OWNER AT ONCE OF ALL DAMAGE AND SHALL REPAIR (OR REPLACE IF NECESSARY) TO THE ORIGINAL CONDITION TO THE SATISFACTION OF OWNER AND ENGINEER AT NO CHARGE IN THE CONTRACT AMOUNT.
9. THE CONTRACTOR SHALL BE RESPONSIBLE FOR PROVIDING DETAILED ELECTRICAL AND CONTROL EQUIPMENT LAYOUT DRAWINGS TO THE ENGINEER AND OWNER FOR APPROVAL PRIOR TO INSTALLATION.
10. ALL CONDUITS NOT LOCATED UNDER SLAB SHALL HAVE A MINIMUM BURIAL DEPTH OF 42", UNLESS NOTED OTHERWISE.
11. CONDUITS SHALL BE BURIED 42" (MINIMUM) BELOW GRADE WITH MARKER TAPE 6" ABOVE TOP OF CONDUIT, UNLESS NOTED OTHERWISE.
12. MINIMUM SIZE CONDUIT SHALL BE 1" (UNLESS NOTED OTHERWISE).
13. CONDUIT ROUTINGS AND DEVICE/EQUIPMENT LOCATIONS SHOWN ARE DIAGRAMMATIC ONLY. CONTRACTOR SHALL FIELD ROUTE AND LOCATE AS REQUIRED.
14. CONTRACTOR SHALL PROVIDE PULL BOXES IN POWER CIRCUIT CONDUIT AS REQUIRED TO LIMIT THE NUMBER OF BENDS TO A MAXIMUM OF 270° OR THREE 90° BENDS.
15. ALL WIRE SHALL BE COPPER.
16. ALL ELECTRICAL CIRCUITS SHALL INCLUDE A GREEN GROUNDING CONDUCTOR SIZED PER NEC.
17. CONDUCTORS SHALL BE TERMINATED ON TERMINAL BLOCKS.
18. THE CONTRACTOR SHALL TAG ALL POWER AND CONTROL SYSTEM CABLING AT ALL TERMINATION POINTS.
19. FINAL CONNECTION TO ALL EQUIPMENT IS SHOWN DIAGRAMMATIC. PROVIDE FINAL CONNECTION AS REQUIRED PER MANUFACTURER OF EQUIPMENT.
20. CONTRACTOR SHALL MAINTAIN A SET OF PRINTS AND MARK-UP DURING CONSTRUCTION TO REFLECT "AS-BUILT" CONDITIONS. PRINTS SHALL BE DELIVERED TO THE ENGINEER UPON COMPLETION OF THE PROJECT.
21. ALL HARDWARE SHALL BE STAINLESS STEEL.
22. ALUMINUM CONDUIT SHALL BE COATED WITH (2) WRAPS OF ANTI-CORROSION TAPE OR RUN THROUGH A SCHEDULE 80 PVC SLEEVE TO WHEN IN CONTACT WITH CONCRETE.
23. BARE COPPER SHALL BE COATED WITH (2) WRAPS OF ANTI-CORROSION TAPE OR RUN THROUGH A SCHEDULE 80 PVC SLEEVE TO WHEN IN CONTACT WITH CONCRETE.
24. ENGINEER OF RECORD SHALL BE RESPONSIBLE FOR FINAL SIZING OF ALL EQUIPMENT.

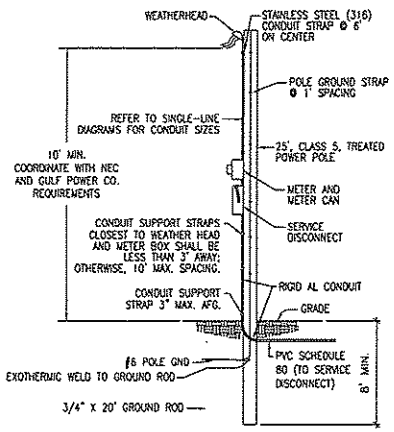

SERVICE LATERAL CONDUIT SHALL BE 3" (MIN) SCHEDULE 80 PVC BELOW GRADE AND 3" (MIN) RIGID AL CONDUIT ABOVE GRADE. ANY REQUIREMENTS BY THE UTILITY COMPANY SHALL PREVAIL OVER THE REQUIREMENTS OUTLINED HERE AND SHALL BE COORDINATED BY THE ELECTRICAL CONTRACTOR PRIOR TO INSTALLATION.

A3 UTILITY POLE DETAIL
NOT TO SCALE

ALL WORK SHALL BE CONSTRUCTED IN ACCORDANCE WITH THE LATEST EDITION OF THE E.C.U.A. STANDARD SPECIFICATIONS

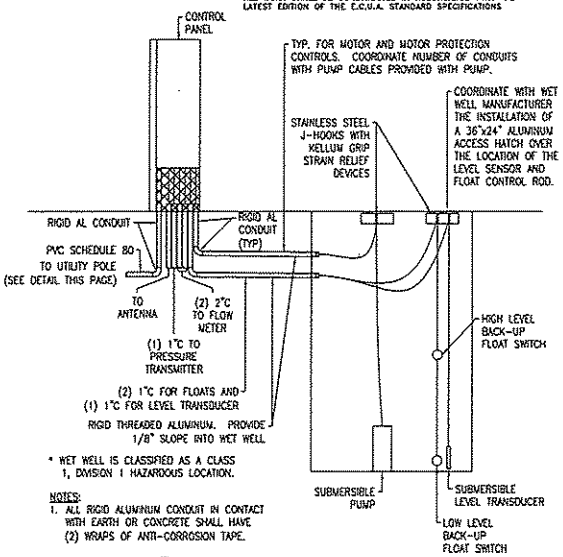

* WET WELL IS CLASSIFIED AS A CLASS 1, DIVISION 1 HAZARDOUS LOCATION.

NOTES:
1. ALL RIGID ALUMINUM CONDUIT IN CONTACT WITH EARTH OR CONCRETE SHALL HAVE (2) WRAPS OF ANTI-CORROSION TAPE.

B4 TYPICAL WET WELL SECTION DETAIL
NOT TO SCALE

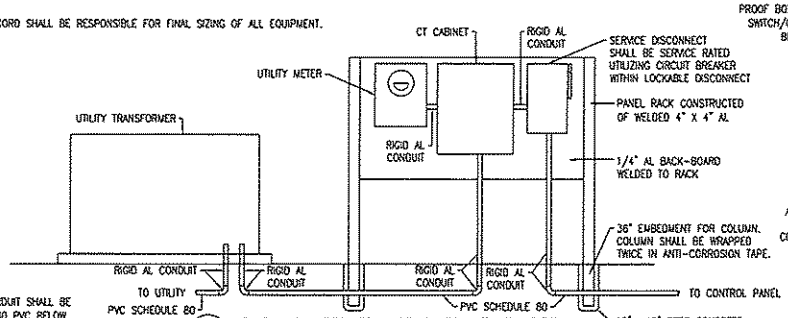

* SERVICE LATERAL CONDUIT SHALL BE 3" (MIN) SCHEDULE 80 PVC BELOW GRADE AND 3" (MIN) RIGID ALUMINUM CONDUIT ABOVE GRADE.

A1 PAD MOUNTED TRANSFORMER UTILITY DETAIL
NOT TO SCALE

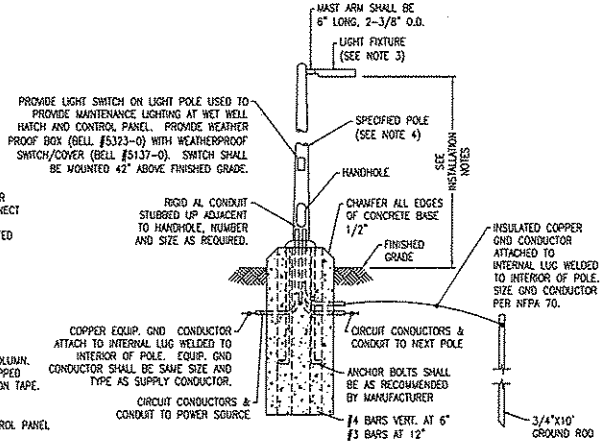

A4 LIGHT POLE INSTALLATION DETAIL
NOT TO SCALE

LIGHTING PERFORMANCE CRITERIA:
1. LIGHTING FIXTURE LAYOUT SHALL BE BASED UPON ACHIEVING 20 FOOT CANDLES (+/- 20%) AT THE FRONT OF THE CONTROL PANEL (WORK-PLANE OF 24" AFG) AND AT THE WET WELL ACCESS HATCH (WORKPLANE OF 0" AFG).
2. GENERAL SECURITY LIGHTING SHALL ENCOMPASS ACCESS GATE AND ALL PIPING/EQUIPMENT AT A MIN: AVERAGE 1 FOOT-CANDLE (+/- 20%, AT WORKPLANE OF 0" AFG).
3. REFER TO LIGHTING CONTROL DIAGRAM ON SHEET No. 18 FOR ADDITIONAL REQUIREMENTS.

LIGHT POLE INSTALLATION NOTES:
1. BURIAL AND DIAMETER DIMENSIONS INDICATED ARE FOR NOMINAL MINIMAL SIZES ONLY. FINAL DIMENSIONS SHALL BE DETERMINED BY A REGISTERED STRUCTURAL ENGINEER IN THE STATE OF FLORIDA. BASED UPON FIXTURES PROVIDED. PROVIDE SIGNED, DATED, AND SEALED PLANS FOR EACH INSTALLATION TYPE AND FIXTURE TYPE AS PART OF LIGHTING SUBMITTAL PACKAGE.
2. THE POLE AND FOUNDATION DESIGN SHALL BE BY A DELEGATED PROFESSIONAL ENGINEER TO MEET THE FOLLOWING CRITERIA:
   2.1. DESIGN WIND SPEED 160 MPH WITH A 1.3 GUST FACTOR. EXPOSURE CATEGORY C.
   2.2. SIZE EMBEDMENT FOR A MAXIMUM PERMANENT POLE DEFLECTION AFTER DESIGN WIND SPEED EVENT OF 1.00".
   2.3. ALUMINUM, ROUND OR SQUARE, TAPERED.
3. FIXTURE SHALL BE AMERICAN ELECTRIC LIGHTING ATB2 FIXTURE, 40 LED, 1000mA DRIVER, 120V, TYPE 4, WITH PHOTOCONTROL.
4. REFER TO SPECIFICATIONS SECTION 16521 "EXTERIOR LIGHTING" FOR ADDITIONAL REQUIREMENTS.
5. LIGHT FIXTURES SHALL BE MOUNTED AT 15'-0" (MAXIMUM) ABOVE FINISHED GRADE.

REVISIONS	BY

IMPROVEMENTS TO WASTEWATER COLLECTION SYSTEM
LIFT STATION CONSTRUCTION DETAILS
ELECTRICAL STANDARDS
FINAL SUBMITTAL

EMERALD COAST UTILITIES AUTHORITY

APPROVED BY:

Drawn	
Designed	
Checked	
Date	MAY '13
Scale	
Project No	
Sheet No.	17
	OF 18 Sheets

ALL WORK SHALL BE CONSTRUCTED IN ACCORDANCE WITH THE LATEST EDITION OF THE E.C.U.A. STANDARD SPECIFICATIONS

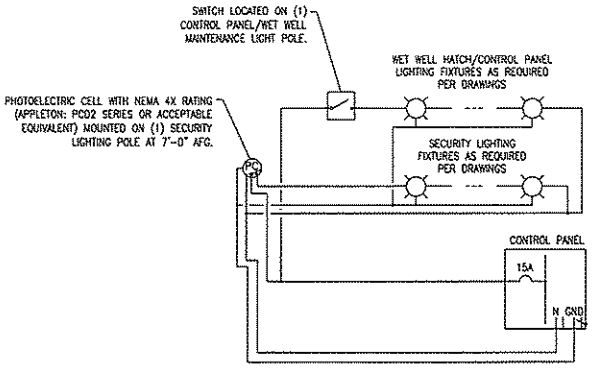

C2 TYPICAL LIGHTING CONTROL DIAGRAM
NOT TO SCALE

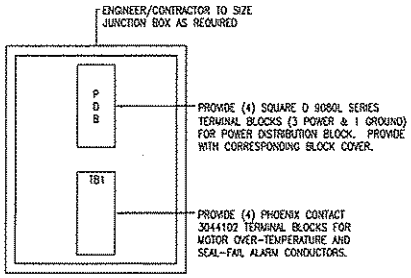

INTERIOR ELEVATION

DETAIL NOTES:

1. ALL TERMINAL BLOCKS SHALL BE PROVIDED WITH CORRESPONDING END BRACKETS AND END COVERS.
2. PROVIDE SEPARATE GROUND LUG IN EACH JUNCTION BOX, BONDED TO JUNCTION BOX.

A1 TYPICAL PUMP JUNCTION BOX ELEVATION
NOT TO SCALE

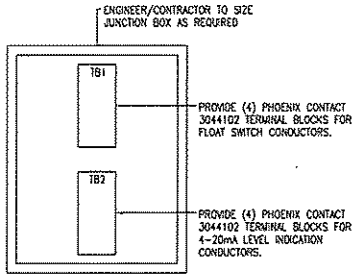

INTERIOR ELEVATION

DETAIL NOTES:

1. ALL TERMINAL BLOCKS SHALL BE PROVIDED WITH CORRESPONDING END BRACKETS AND END COVERS.
2. PROVIDE SEPARATE GROUND LUG IN EACH JUNCTION BOX, BONDED TO JUNCTION BOX.

A3 TYPICAL LEVEL INDICATION JUNCTION BOX ELEVATION
NOT TO SCALE

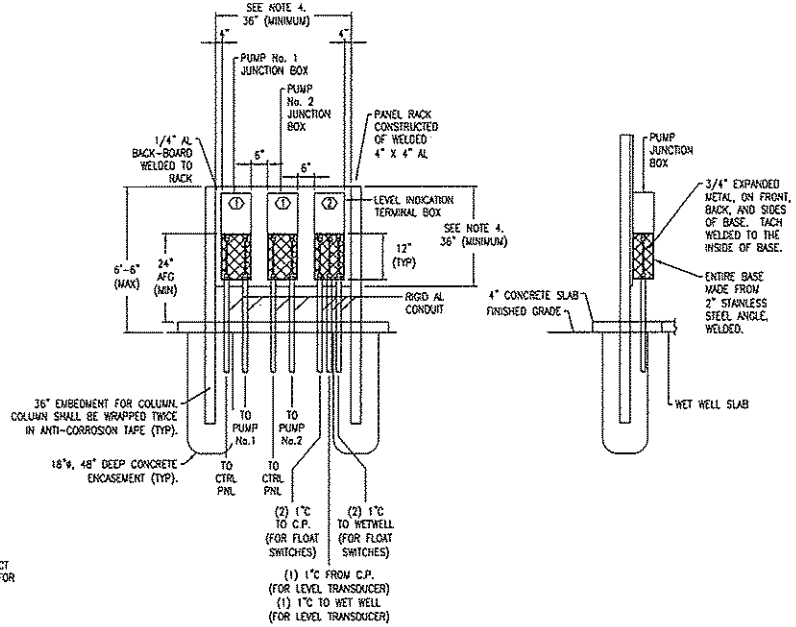

FRONT ELEVATION

SIDE ELEVATION

DETAIL NOTES:

1. THIS DETAIL SHALL ONLY APPLY WHEN THE CONTROL PANEL CANNOT BE PLACED WITHIN 6'-0" OF THE WET WELL TO ALLOW FOR CONNECTION OF STANDARD 50 FOOT PUMP CABLE CONNECTIONS.
2. BACKBOARD SHALL BE PLACED AT THE EDGE OF THE WET WELL SLAB BETWEEN THE WET WELL AND CONTROL PANEL.
3. JUNCTION BOXES SHALL BE MOUNTED SUCH THAT THEY ARE FACING THE WET WELL.
4. ENGINEER/CONTRACTOR SHALL SIZE JUNCTION BOXES AND BACKBOARDS BASED UPON INSTALLATION REQUIREMENTS PROVIDED AT TIME OF DESIGN.

KEY NOTES

① REFER TO "TYPICAL PUMP JUNCTION BOX ELEVATION" (THIS SHEET) FOR ADDITIONAL REQUIREMENTS.

② REFER TO "TYPICAL LEVEL INDICATION JUNCTION BOX ELEVATION" (THIS SHEET) FOR ADDITIONAL REQUIREMENTS.

A4 TYPICAL PUMP JUNCTION BOXES
NOT TO SCALE

REVISIONS	BY

IMPROVEMENTS TO WASTEWATER COLLECTION SYSTEM

LIFT STATION CONSTRUCTION DETAILS

ELECTRICAL STANDARDS

FINAL SUBMITTAL

EMERALD COAST UTILITIES AUTHORITY

APPROVED BY:

Drawn	
Designed	
Checked	
Date	MAY '13
Scale	
Project No	
Sheet No.	18
	OF 18 Sheets

ALL WORK SHALL BE CONSTRUCTED IN ACCORDANCE WITH THE LATEST EDITION OF THE E.C.U.A. STANDARD SPECIFICATIONS

240-208V 3ø 1HP - 15HP FULL VOLTAGE STARTER PANEL DESIGN

FOR

EMERALD COAST UTILITY AUTHORITY ESCAMBIA COUNTY, FL

SHEET NO.	SHEET DESCRIPTION
1	MAIN POWER DISTRIBUTION SCHEMATIC
2	CONTROL SCHEMATIC
3	DIGITAL INPUTS SCHEMATIC
4	DIGITAL OUTPUTS & ANALOG INPUTS SCHEMATIC
5	ANALOG OUTPUTS & STARTER CONTROL SCHEMATIC
6	TERMINAL BLOCK LAYOUT AND FIELD CONNECTIONS
7	LINEAR EXTERIOR PANEL LAYOUT & FIELD CONDUIT REQUIREMENTS
8	POWER & PUMP 1 INTERNAL PANEL LAYOUTS
9	PUMP 2 & CONTROL PANEL INTERNAL LAYOUTS
10	EQUIPMENT LIST
11	HORSEPOWER RELATED EQUIPMENT & POWER CONDUCTORS
12	PANEL TO PANEL CONDUCTORS & EQUIPMENT
13	PANEL TO PANEL WIRING
14	LINEAR STAINLESS STEEL FRAME LAYOUT
15	TABLES, LEGENDS & TAGS
16	ISR INSTRUCTIONS
17	GENERAL NOTES AND DETAILS
18	GENERAL NOTES AND DETAILS

REVISIONS	BY

IMPROVEMENTS TO WASTEWATER COLLECTION SYSTEM

LIFT STATION CONSTRUCTION DETAILS

ELECTRICAL STANDARDS

FINAL SUBMITTAL

ECUA EMERALD COAST UTILITIES AUTHORITY

APPROVED BY:

Drawn:
Designed:
Checked:
Date: MAY '13
Scale:
Project No:
Sheet No. 0
Of 18 Sheets

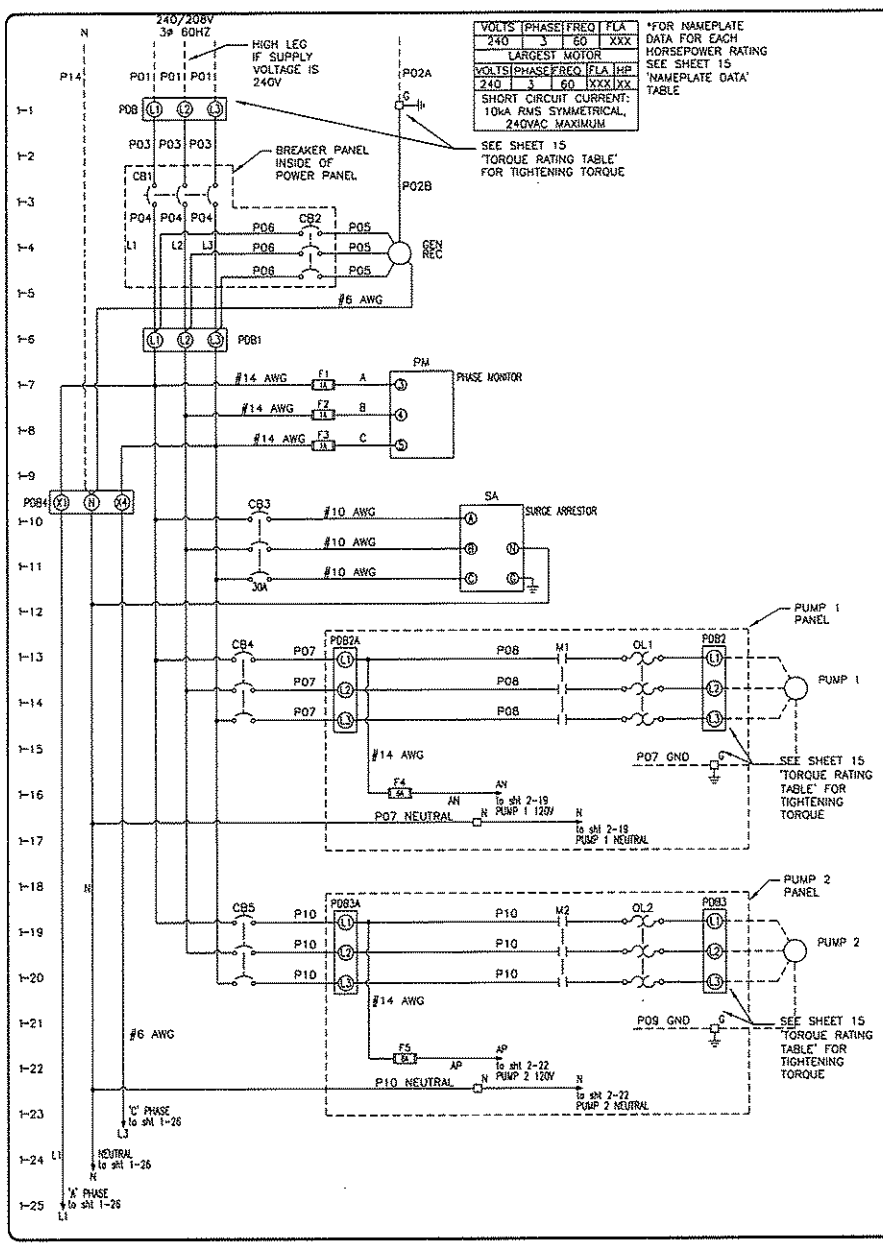

VOLTS	PHASE	FREQ	FLA
240	3	60	XXX
LARGEST MOTOR			
VOLTS	PHASE	FREQ	FLA	HP
240	3	60	XXX	XX
SHORT CIRCUIT CURRENT: 10kA RMS SYMMETRICAL, 240VAC MAXIMUM			

*FOR NAMEPLATE DATA FOR EACH HORSEPOWER RATING SEE SHEET 15 'NAMEPLATE DATA' TABLE

ALL WORK SHALL BE CONSTRUCTED IN ACCORDANCE WITH THE LATEST EDITION OF THE E.C.U.A. STANDARD SPECIFICATIONS

NOTES:

1. THE COMPLETED CONTROL PANEL SHALL BE LABELED AND MANUFACTURED TO MEET U.L. 508A AND 698A CERTIFICATION.
2. CONTROL PANEL WIRING SHALL BE STRANDED COPPER, MINIMUM SIZE #16 AWG WITH 600V 90DEGREE C TYPE THHN INSULATION.
3. CONTROL PANEL WIRING SHALL BE NUMBERED AT BOTH ENDS WITH TYPE WRITTEN, HEAT SHRINKABLE WIRE MARKERS.
4. ALL WIRING WITHIN THE CONTROL PANEL SHALL BE COLOR CODED OR CODED USING ELECTRICAL TAPE IN SIZES WHERE COLORED INSULATION IS NOT AVAILABLE. THE FOLLOWING CODING SHALL BE USED:
   - 4.1. UNGROUNDED AC CONDUCTORS AT SUPPLY VOLTAGE – BLACK
   - 4.2. GROUNDED AC CURRENT CARRYING CONDUCTORS – WHITE
   - 4.3. UNGROUNDED AC CONDUCTORS BELOW SUPPLY VOLTAGE – RED
   - 4.4. UNGROUNDED AC CONTROL CONDUCTORS & CONDUCTORS THAT REMAIN ENERGIZED WHEN THE MAIN DISCONNECT IS OFF – YELLOW
   - 4.5. UNGROUNDED DC CONTROL CONDUCTORS – ORANGE
   - 4.6. GROUNDED DC CURRENT CARRYING CONDUCTORS – BROWN
   - 4.7. INTRINSICALLY SAFE WIRING – BLUE
   - 4.8. GROUND CONDUCTORS – GREEN
5. SEE SHEETS 11 & 12 FOR DETAILS REGARDING ALL POWER CONDUCTORS LABELED PXX.
6. SEE SHEET 11 'HORSEPOWER RELATED COMPONENTS EQUIPMENT LIST' FOR RATINGS OF OVERCURRENT PROTECTION DEVICES.

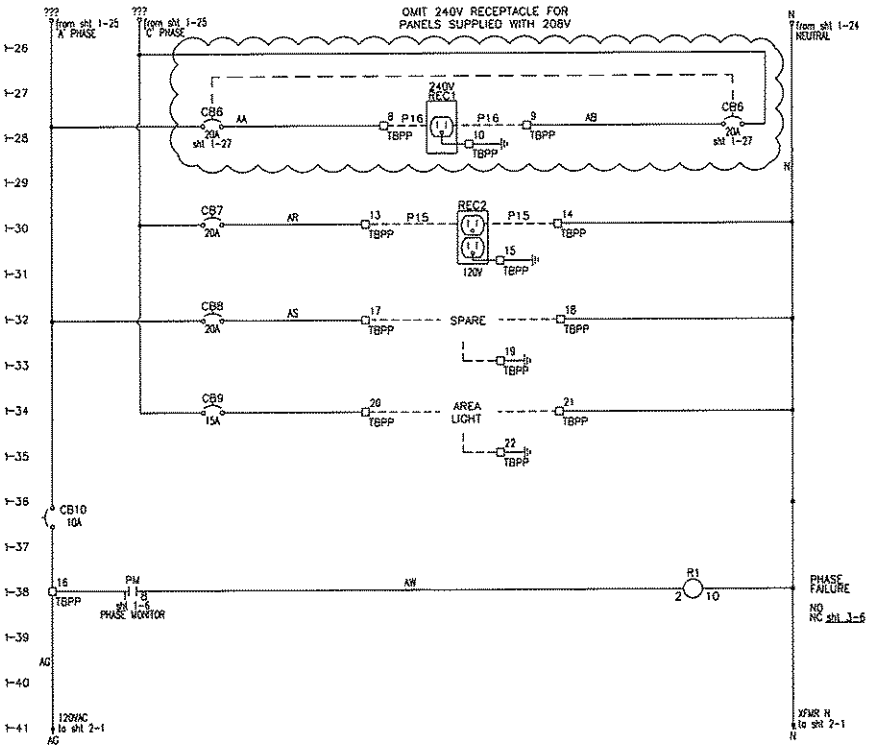

REVISIONS	BY

IMPROVEMENTS TO WASTEWATER COLLECTION SYSTEM

LIFT STATION CONSTRUCTION DETAILS

ELECTRICAL STANDARDS

FINAL SUBMITTAL

EMERALD COAST UTILITIES AUTHORITY

APPROVED BY:

Drawn	
Designed	
Checked	
Date	MAY '13
Scale	
Project No.	
Sheet No.	1
	OF 18 Sheets

ALL WORK SHALL BE CONSTRUCTED IN ACCORDANCE WITH THE LATEST EDITION OF THE E.C.U.A. STANDARD SPECIFICATIONS

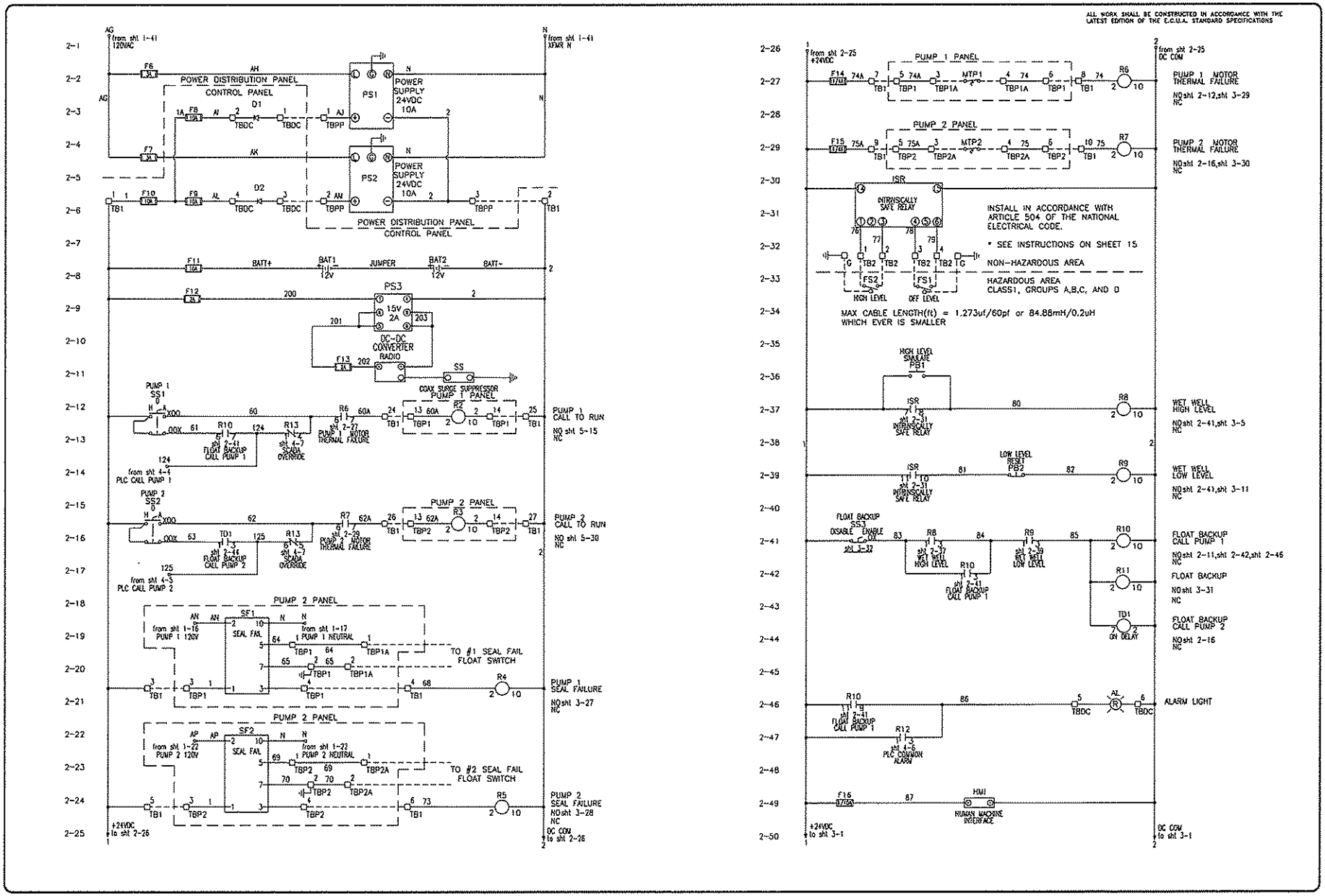

REVISIONS	BY

IMPROVEMENTS TO WASTEWATER COLLECTION SYSTEM

LIFT STATION CONSTRUCTION DETAILS

ELECTRICAL STANDARDS

FINAL SUBMITTAL

EMERALD COAST UTILITIES AUTHORITY

APPROVED BY:

Drawn	
Designed	
Checked	
Date	MAY '13
Scale	
Project No.	
Sheet No.	2
	Of 18 Sheets

ALL WORK SHALL BE CONSTRUCTED IN ACCORDANCE WITH THE LATEST EDITION OF THE E.C.U.A. STANDARD SPECIFICATIONS

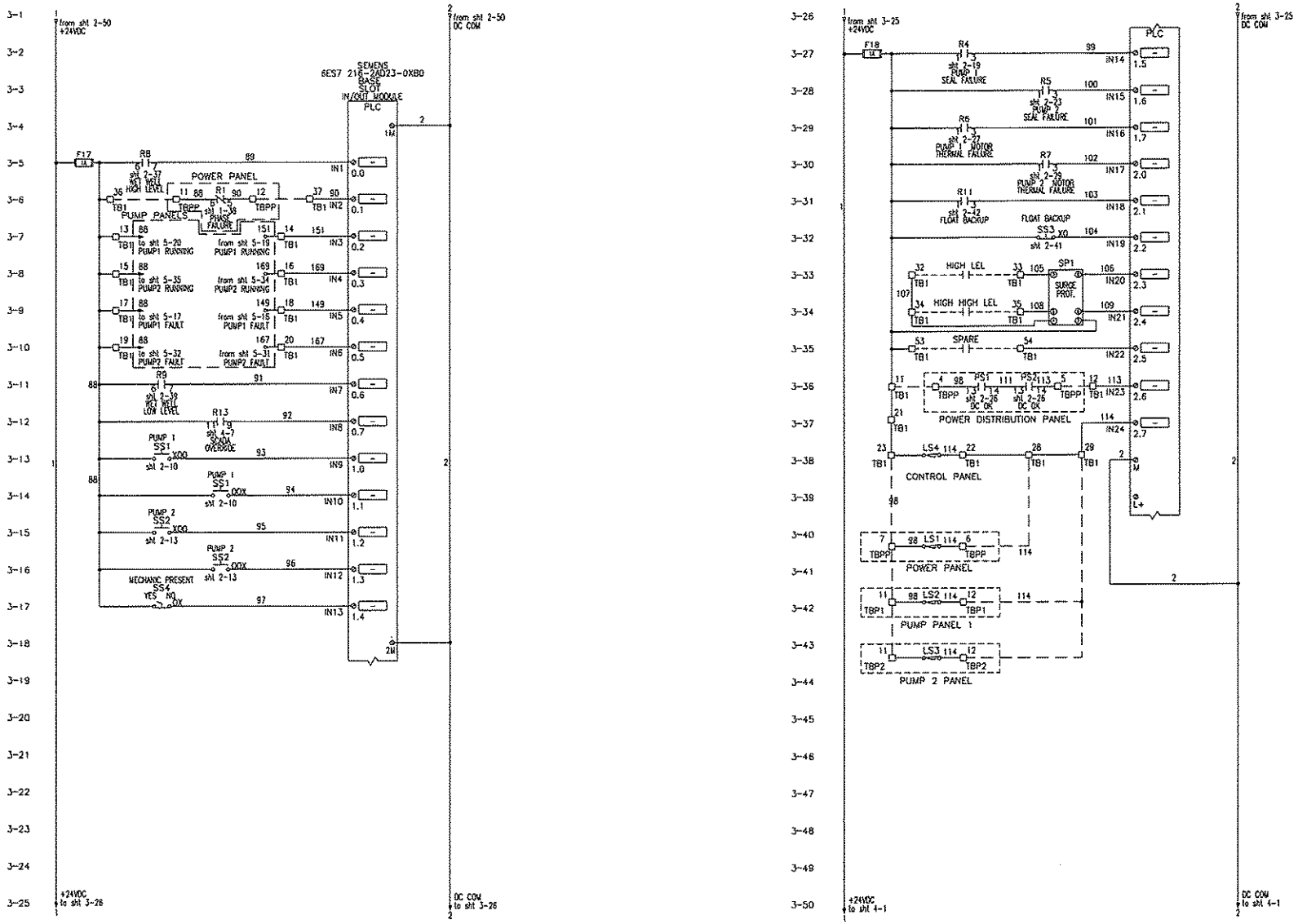

REVISIONS	BY

IMPROVEMENTS TO WASTEWATER COLLECTION SYSTEM

LIFT STATION CONSTRUCTION DETAILS

ELECTRICAL STANDARDS

FINAL SUBMITTAL

EMERALD COAST UTILITIES AUTHORITY

APPROVED BY:

Drawn	
Designed	
Checked	
Date	MAY '13
Scale	
Project No	
Sheet No.	3
	Of 18 Sheets

ALL WORK SHALL BE CONSTRUCTED IN ACCORDANCE WITH THE LATEST EDITION OF THE E.C.U.A. STANDARD SPECIFICATIONS

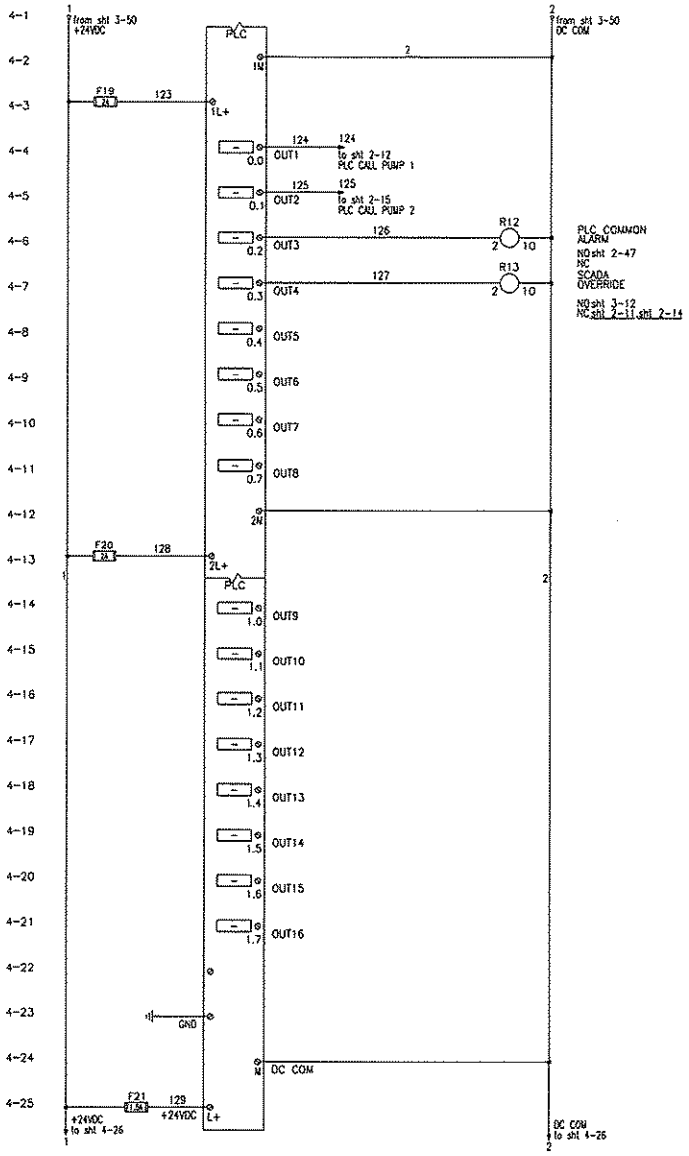

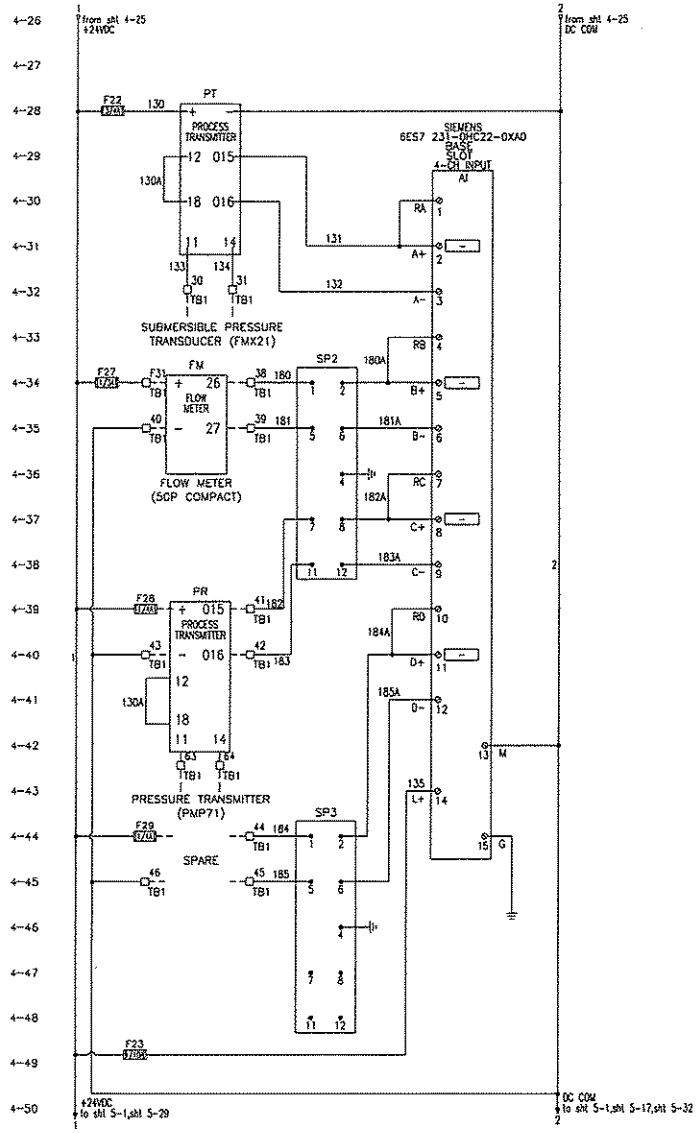

REVISIONS	BY

IMPROVEMENTS TO WASTEWATER COLLECTION SYSTEM

LIFT STATION CONSTRUCTION DETAILS

ELECTRICAL STANDARDS

FINAL SUBMITTAL

EMERALD COAST UTILITIES AUTHORITY

APPROVED BY:

Drawn:	
Designed:	
Checked:	
Date:	MAY '13
Scale:	
Project No:	
Sheet No.	4
OF	18 Sheets

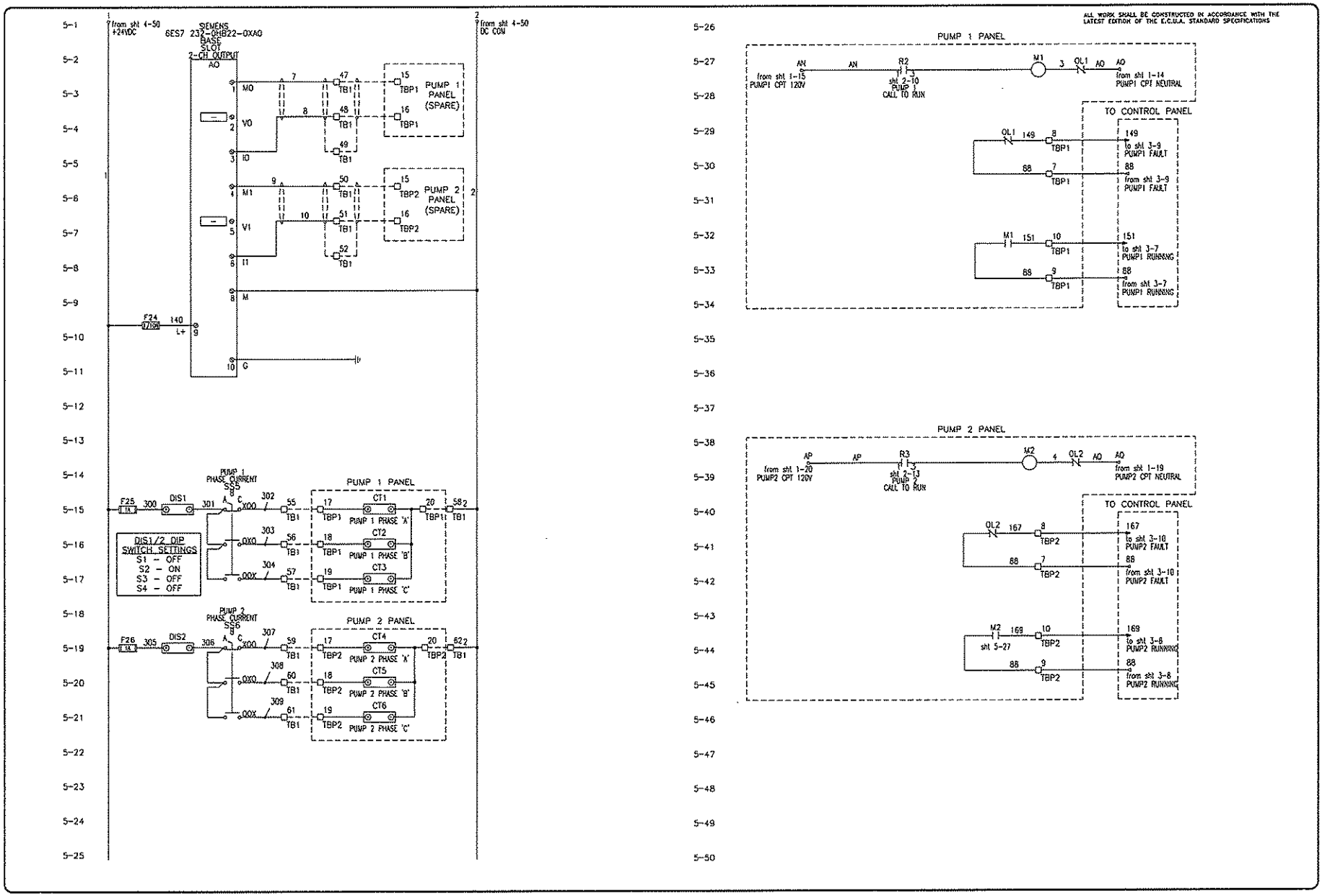

REVISIONS	BY

IMPROVEMENTS TO WASTEWATER COLLECTION SYSTEM

LIFT STATION CONSTRUCTION DETAILS

ELECTRICAL STANDARDS

FINAL SUBMITTAL

EMERALD COAST UTILITIES AUTHORITY

APPROVED BY:

Drawn:
Designed:
Checked:
Date: MAY '13
Scale:
Project No:
Sheet No. 5
OF 18 Sheets

ALL WORK SHALL BE CONSTRUCTED IN ACCORDANCE WITH THE LATEST EDITION OF THE E.C.U.A. STANDARD SPECIFICATIONS

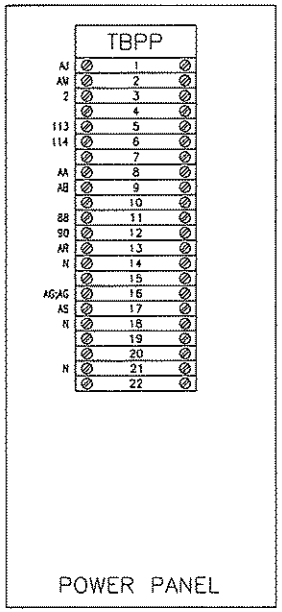

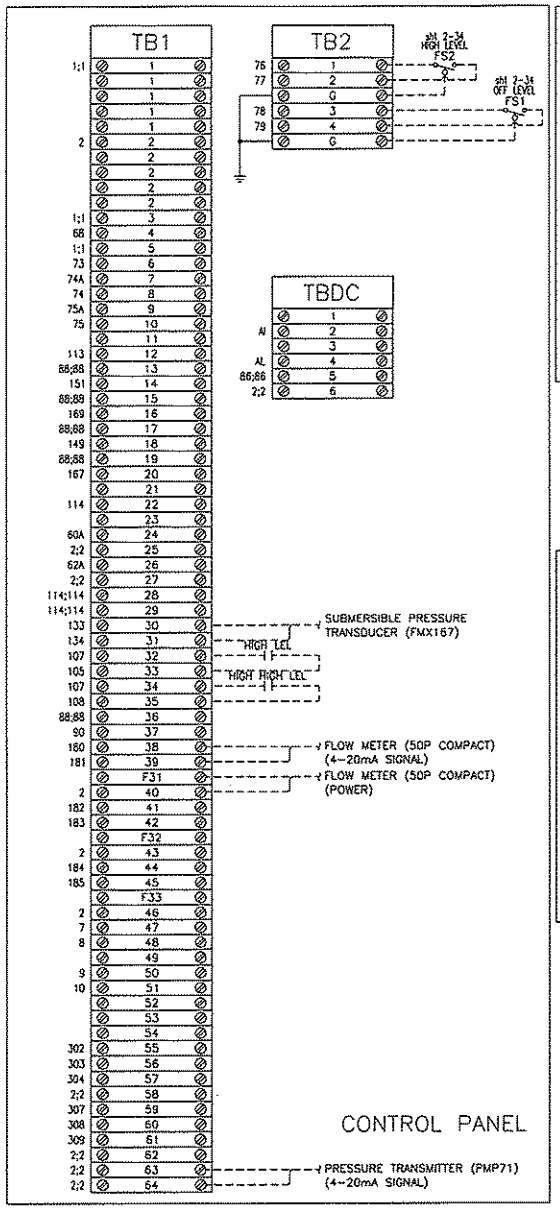

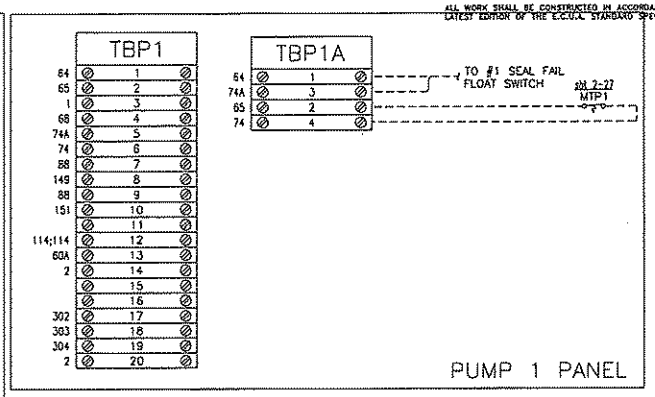

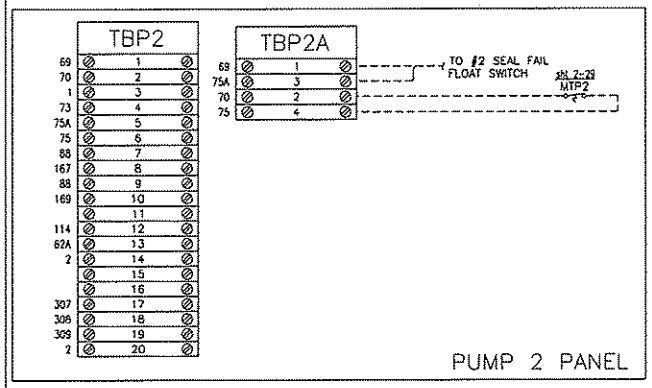

TYPICAL FOR ALL TERMINAL BLOCKS ON THIS DRAWING

USE COPPER CONDUCTORS ONLY
75 DEG C (167 DEG F)
5.3-7.0 LB/IN TIGHTENING TORQUE

NOTES:

TERMINAL BLOCK DESIGNATIONS:

- TBPP – POWER PANEL TERMINAL BLOCK
- TB1 – CONTROL PANEL TERMINAL BLOCK
- TB2 – INTRINSICALLY SAFE TERMINAL BLOCK
- TBP1 – PUMP 1 TERMINAL BLOCK
- TBP1A – PUMP 1 TERMINAL BLOCK (MOTOR THERMAL AND SEAL FAILURE)
- TBP2 – PUMP 2 TERMINAL BLOCK
- TBP2A – PUMP 2 TERMINAL BLOCK (MOTOR THERMAL AND SEAL FAILURE)

REVISIONS	BY

IMPROVEMENTS TO WASTEWATER COLLECTION SYSTEM

LIFT STATION CONSTRUCTION DETAILS

ELECTRICAL STANDARDS

FINAL SUBMITTAL

EMERALD COAST UTILITIES AUTHORITY

APPROVED BY:

Drawn	
Designed	
Checked	
Date	MAY '13
Scale	
Project No	
Sheet No	6
Of	18 Sheets

ALL WORK SHALL BE CONSTRUCTED IN ACCORDANCE WITH THE LATEST EDITION OF THE E.C.U.A. STANDARD SPECIFICATIONS

NOTES

1. SEE SHEET 15 FOR SCHEDULES, LEGENDS AND PANEL TAGS.

ATTENTION

THIS LAYOUT IS ONE OF TWO (2) POSSIBLE CHOICES – SEE SHEET 7A FOR THE OTHER OPTION. IF THIS LAYOUT OPTION IS SELECTED, SEE SHEET 14 FOR ASSOCIATED RACK DETAILS.

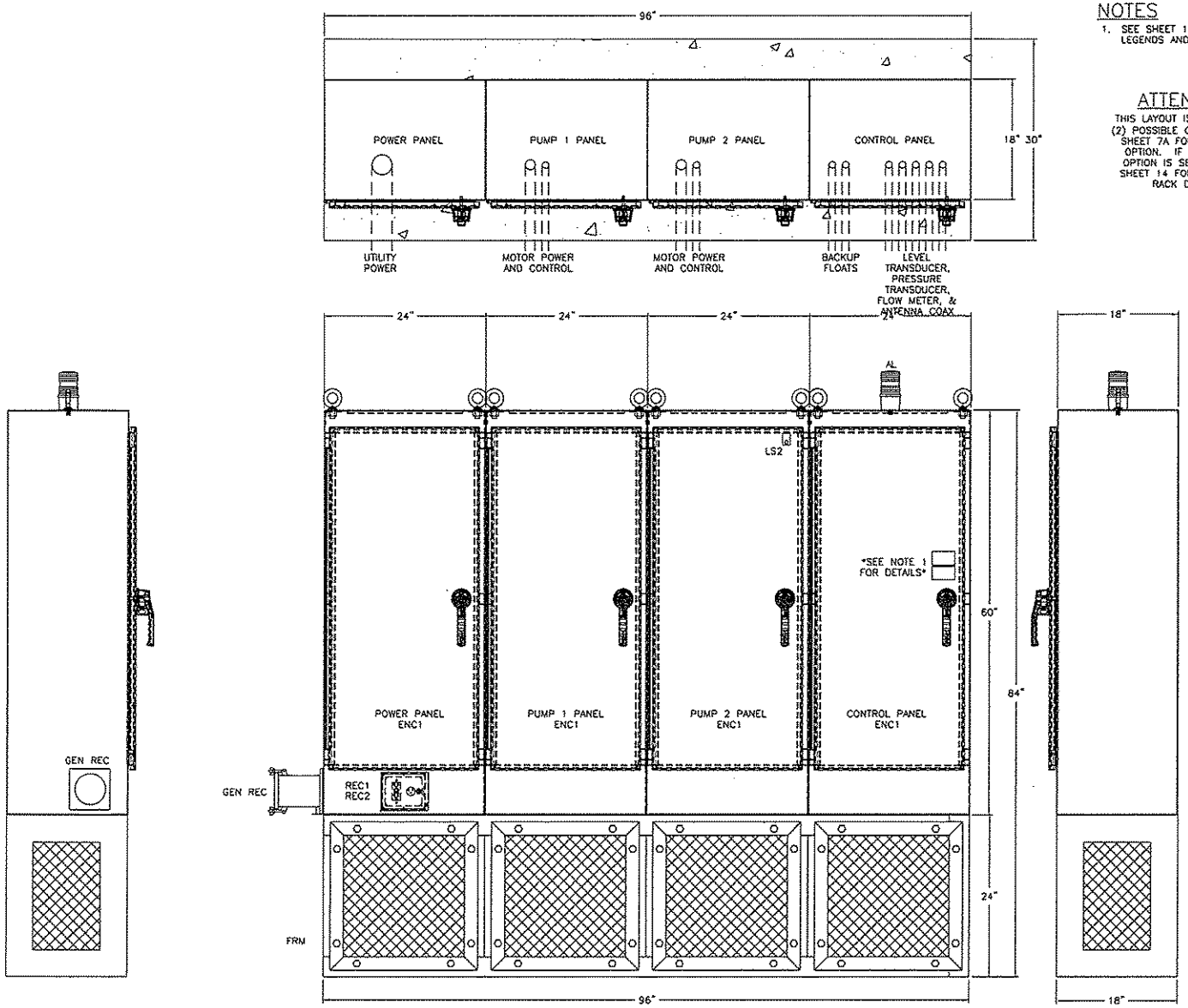

REVISIONS	BY

IMPROVEMENTS TO WASTEWATER COLLECTION SYSTEM

LIFT STATION CONSTRUCTION DETAILS

ELECTRICAL STANDARDS

FINAL SUBMITTAL

EMERALD COAST UTILITIES AUTHORITY

APPROVED BY:

Drawn:	
Designed:	
Checked:	
Date:	MAY '13
Scale:	
Project No:	
Sheet No.	7
	OF 18 Sheets

ALL WORK SHALL BE CONSTRUCTED IN ACCORDANCE WITH THE LATEST EDITION OF THE E.C.U.A. STANDARD SPECIFICATIONS

NOTES

1. SEE SHEET 15 FOR SCHEDULES, LEGENDS AND PANEL TAGS.
2. LAYOUT OF THE POWER & STARTER SECTIONS DEPICTS THE LARGEST POSSIBLE HORSEPOWER CONFIGURATION.

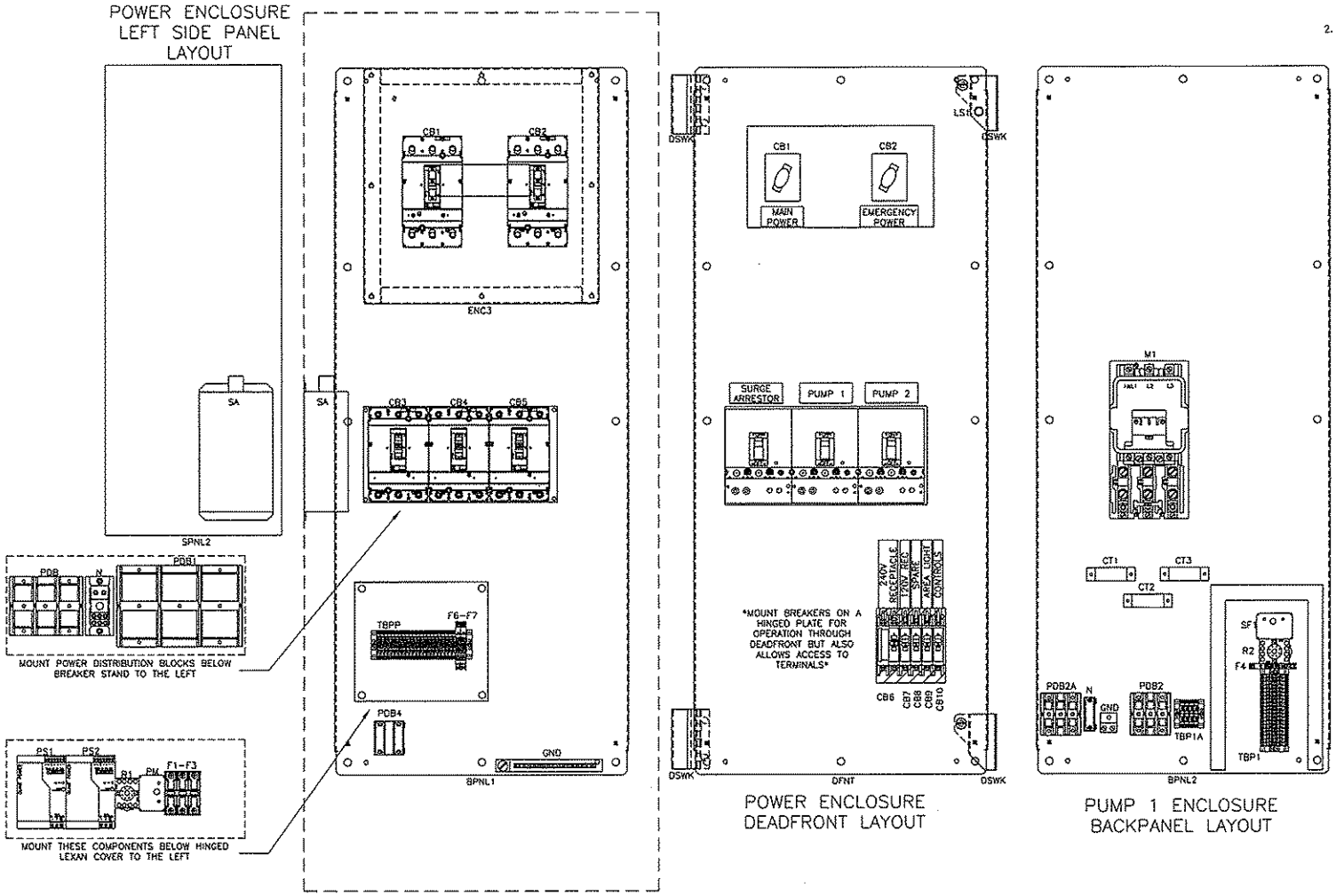

REVISIONS	BY

IMPROVEMENTS TO WASTEWATER COLLECTION SYSTEM

LIFT STATION CONSTRUCTION DETAILS

ELECTRICAL STANDARDS

FINAL SUBMITTAL

EMERALD COAST UTILITIES AUTHORITY

APPROVED BY:

Drawn	
Designed	
Checked	
Date	MAY '13
Scale	
Project No	
Sheet No.	8
	Of 18 Sheets

ALL WORK SHALL BE CONSTRUCTED IN ACCORDANCE WITH THE LATEST EDITION OF THE E.C.U.A. STANDARD SPECIFICATIONS

NOTES

1. SEE SHEET 15 FOR SCHEDULES, LEGENDS AND PANEL TAGS.
2. LAYOUT OF THE VFD SECTION DEPICTS THE LARGEST POSSIBLE HORSEPOWER CONFIGURATION.

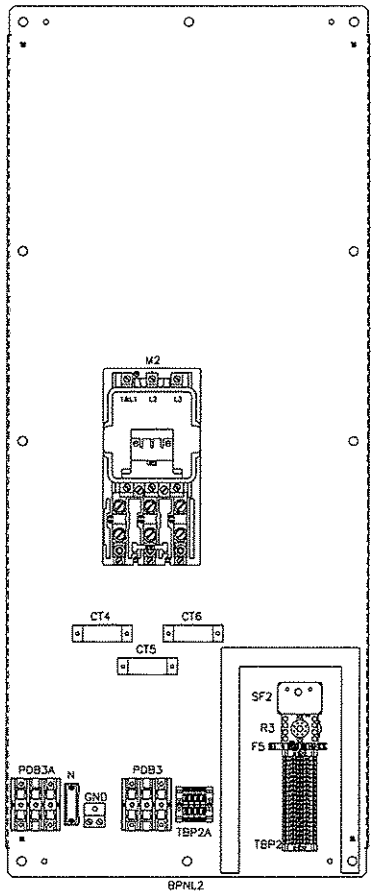

PUMP 2 ENCLOSURE
BACKPANEL LAYOUT

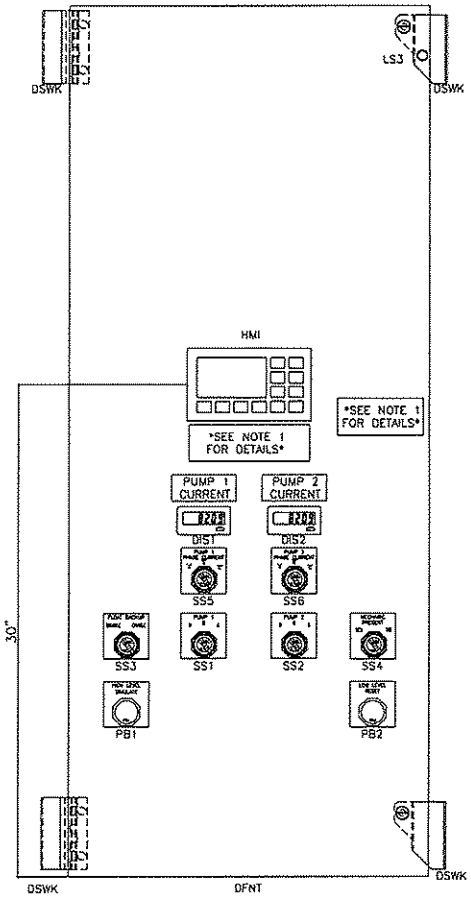

CONTROL ENCLOSURE
DEADFRONT LAYOUT

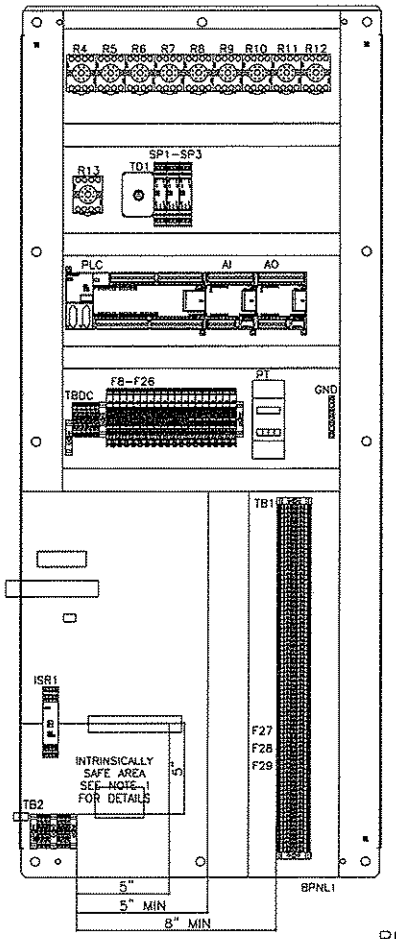

CONTROL ENCLOSURE
BACKPANEL LAYOUT

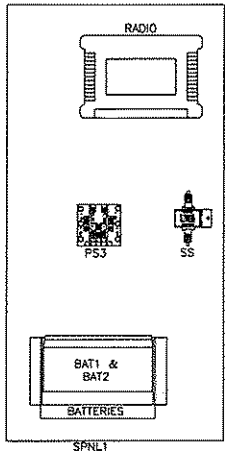

CONTROL ENCLOSURE
RIGHT SIDEPANEL LAYOUT

REVISIONS	BY

IMPROVEMENTS TO WASTEWATER COLLECTION SYSTEM

LIFT STATION CONSTRUCTION DETAILS

ELECTRICAL STANDARDS

FINAL SUBMITTAL

ECUA
EMERALD COAST UTILITIES AUTHORITY

APPROVED BY:

Drawn	
Designed	
Checked	
Date	MAY '13
Scale	
Project No	
Sheet No.	9
	OF 18 Sheets

240-208V FVNR Equipment List

Item	Tag	Panel	Description	Manufacturer	Model	Qty
1	ENC1	All	60X24X18 NEMA 4X SS Enclosure	Hoffman	A60241SSFSN4	4
2	BPNL1	All	60x24 Painted Steel Backpanel	Hoffman	A60P24F1	4
3	SPNL1	Control	28"H x 12"W Aluminum Sidepanel	EWS	Custom	1
4	DFNT	Power & Control	60x24 Aluminum Deadfront Panel	EWS	Custom	2
5	DSWK	Power & Control	Door Swing Kit	Hoffman	ANADFK	2
6	FRM	Power	Expanded Metal Stainless Steel Frame	EWS	SEE DRAWINGS	1
7	PDB	Power	Incoming Power Distribution Block PDB	Square D	SEE HP TABLE SHEET 11	1
8	PDB	Power	Incoming Power Distribution Block PDB Cover	Square D	SEE HP TABLE SHEET 11	1
9	GND	Power	Power Panel Ground Bar	Square D	PK15GTA-L	1
10	ENC3	Power	16"H x 16"W x 8"D Screw Cover Type 3R Enclosure	Hoffman	A16168GSC	1
11	CB1	Power	500V Main Circuit Breaker	Square D	SEE HP TABLE SHEET 11	1
12	CB2	Power	500V Emergency Circuit Breaker	Square D	SEE HP TABLE SHEET 11	1
13	CB1,CB2	Power	Mechanical Interlock for H/J Frame Circuit Breakers	Square D	S29369	1
14	CB1,CB2	Power	Door Mounted Rotary Handle for H/J Frame Circuit Breakers	Square D	S29338	2
15	GEN REC	Power	NEMA 4X Generator Receptacle	Appleton	SEE HP TABLE SHEET 11	1
16	GEN REC	Power	NEMA 4X Generator Plug (Ship Loose)	Appleton	SEE HP TABLE SHEET 11	1
17	PDB1	Power	Main Power Distribution Block PDB1	Square D	SEE HP TABLE SHEET 11	1
18	PDB1	Power	Main Power Distribution Block PDB1 Cover	Square D	SEE HP TABLE SHEET 11	1
19	F1-F3	Power	3 Pole Rejection Type Fuse Block	Bussmann	BC6033PQ	1
20	F1-F3	Power	1A Rejection Type Fuse, Class CC	Bussmann	KTK-R-1	3
21	F1-F3	Power	Fuse Cover	Bussmann	SAMI-7N	3
22	PM	Power	24GV Phase Monitor	Timemark	2578	1
23	PM	Power	600V, 8-Pin Relay Base	ABB	OT08PC	1
24	CB3-CB5	Power	Breaker Stand	EWS	Custom	1
25	CB3	Power	30A 600V 3 Pole Circuit Breaker, Main Surge Arrestor	Square D	HDL36030	1
26	SA	Power	Main Surge Arrestor	SSI	SEE HP TABLE SHEET 11	1
27	CB4, CB5	Power	600V 3 Pole Circuit Breaker, Starter	Square D	SEE HP TABLE SHEET 11	2
28	CB4, CB5	Power	H & J Frame Circuit Breaker Locking System	Square D	S29371	2
29	PDB2A, PDB3A	Pump 1 & 2	Starter Power Distribution Block	Square D	9080LBA362104	2
30	PDB2A, PDB3A	Pump 1 & 2	Starter Power Distribution Block Cover	Square D	9080LB23	2
31	M1, M2	Pump 1 & 2	NEMA Starter	Square D	SEE HP TABLE SHEET 11	2
32	OL1, OL2	Pump 1 & 2	Overload Heaters	Square D	SEE HP TABLE SHEET 11	2
33	OL1, OL2	Pump 1 & 2	Overload Contact, (2) N.C.	Square D	9999-SO5	2
34	GND	Pump 1 & 2	Motor Ground Lug	NSI	2-0T	2
35	PDB2, PDB3	Pump 1 & 2	Motor Power Distribution Block PDB2&3, (1)#14-2/0.....(1)#14-2/0	Square D	9080LBA362101	2
36	PDB2, PDB3	Pump 1 & 2	Motor Power Distribution Block PDB2&3 Cover	Square D	9080LB23	2
37	CB7-CB11	Power	Hinged Aluminum Bracked for Mounting 240/120V Circuit Breakers through Deadfront	EWS	Custom	1
38	PDB4	Power	240V/120V Power Distribution Block PDB4, (1) #14-2 .. (4) #18-10	Square D	9080LBA361104	1
39	CB6	Power	20A, 240V, 2 Pole Circuit Breaker	Square D	QOU220	1
40	REC1	Power	20A, 250V, 6-20R Receptacle	P&S	5872I	1
41	CB7, CB8	Power	20A, 120V 1 Pole Circuit Breaker	Square D	QOU120	2
42	REC2	Power	120V 20A GFCI Duplex Receptacle NEMA5-20R	P&S	2094-I	1
43	REC1, REC2	Power	Custom Receptacle Cover NEMA 4X S.S.	HOFFMAN	HIORPSS-MOD	1
44	REC1, REC2	Power	3/4 1G AL FD BOX	Appelton	4CS-1/2	2
45	CB9	Power	15A, 120V, 1 Pole Circuit Breaker	Square D	QOU115	1
45	CB10	Power	10A, 120V, 1 Pole Circuit Breaker	Square D	QOU110	1
46	R1	Power	120V 3PDT General Purpose Relay w/ Indicator Lamp	Potter Brumfield	KRPA-14AN-120	1
47	R1-R13, SF1, SF2	All	11 Pin Relay Base	ABB	ND5-11	15
48	F4-F7	Pump 1, 2 & Power	Fused Terminal Block w/ 120V Blown Fuse Indication	Allen Bradley	1492-H4	4
49	-	Pump 1, 2 & Power	1492-H4 &H5 Fused Terminal Block End Cover	Allen Bradley	1492-N37	4
50	F6, F7	Power	3A Fuse	Bussmann	AGC-3	2
51	PS1, PS2	Power	10A 24VDC Power Supply	Phoenix Contact	2938604	2
52	D1, D2	Power	10A Diode, P1000A	Newark	5187094	2
53	-	Power	Custom Stand/Lexan Hinged Cover w/Alum Stand for TBPP & Power Supply Fuses	EWS	Custom	1
54	F8-F24	Control	Fused Terminal Block w/ 24VDC Blown Fuse Indication	Allen Bradley	1492-H5	17
55	F8 - F11	Control	10A Fuse	Bussmann	AGC-10	4
56	BAT1, BAT2	Control	12VDC Battery	Power Sonic	PS1290	2
57	PS3	Control	24VDC-15VDC Converter, 2A	Vicor	V1-J12-EY-B1	1
58	RADIO	Control	400MHz Radio	GE MDS	SD04MD	1
59	RADIO	Control	DB9 Male/Male Gender Changer	Office Depot	946660	1
60	RADIO/SS	Control	3 Foot LMR400UF Coaxial Jumper NMale to TNCMale	Tessco	324503	1
61	SS	Control	Coaxial Surge Suppressor, 50-700MHz	Polyphaser	IS-50NX-C1	1
62	-	-	50FT Coaxial Cable, NMale-Nmale, Wireless Solutions 400-07-07-P50 (Ship Loose)	Tessco	370875	1

ALL WORK SHALL BE CONSTRUCTED IN ACCORDANCE WITH THE LATEST EDITION OF THE E.C.U.A. STANDARD SPECIFICATIONS

240-208V FVNR Equipment List

Item	Tag	Control	Description	Manufacturer	Model	Qty
63	-	-	400MHz Yagi Antenna w/ N Female Connector, MAXRAD MYA4506N (Ship Loose)	Tessci	37634	1
64	-	-	Antenna Tower 5' Base Section, ROHN R-5825GS (Ship Loose)	Tessco	64559	1
65	-	-	Antenna Tower 10' Mid Section, ROHN R-25G (Ship Loose)	Tessco	56866	1
66	-	-	Antenna Tower 9' Top Section, ROHN R-25AG2 (Ship Loose)	Tessco	70080	1
67	-	-	21' 1-1/4" S.S. Antenna Mast (Ship Loose)	Bell Steel	023008	1
68	F14, F15	Control	1/4A Fuse	Bussmann	AGC-1/4	2
69	F12, F13, F19, F20	Control	2A Fuse	Bussmann	AGC-2	4
70	SS1, SS2	Control	3 Position Selector Switch, 30MM	Square D	9001SK543BH2	2
71	R2-R13	Control	24VDC 3PDT General Purpose Relay w/ Indicator Lamp	Potter Brumfield	KRPA-14DN-24	12
72	SF1, SF2	Control	120V Seal Failure Relay	ATC	SPM-120-AAA-10X	2
73	ISR1	Control	Intrinsically Safe Barrier Relay, 24VDC	Pepperl & Fuchs	KFD2-SR2-Ex2.W	1
74	TB2	Control	Terminal Block, Blue TB2	Phoenix Contact	3044115	4
75	TB2	Control	Terminal Block, Blue End Barrier, TB2	Phoenix Contact	3047235	1
76	TB2	Control	Ground Terminal Blocks, TB2	Phoenix Contact	3044128	2
77	PB1, PB2	Control	Push Button, Black 1NO 1NC	Square D	9001SKR1BH13	2
78	SS3, SS4	Control	2 Position Selector Switch, 30MM	Square D	9001SKS11BH2	2
79	TD1	Control	24VDC 0-180 Second Time Delay Relay	Square D	RE48ATM12MW	1
80	TD1	Control	8 Pin Relay Base	ABB	ND5-8	1
81	AL	Control	24VDC Red Alarm Light	Federal Signal	LP3M-012-048R	1
82	F16, F23, F24	Control	1/10A Fuse	Bussmann	AGC-1/10	3
83	HMI	Control	TD400C Text Display	Siemens	6AV6 640-0AA00-0AX1	1
84	F4, F5, F17, F18	Control	1A Fuse	Bussmann	AGC-1	4
85	PLC	Control	S7-200 Dual Com Port Processor w/ 24 DI & 16 DO Points	Siemens	6ES7 216-2AD23-0XB0	1
86	AI	Control	S7-200 4 Point AI Module	Siemens	6ES7 231-0HC22-0XA0	1
87	AO	Control	S7-200 2 Point AO Module	Siemens	6ES7 232-0HB22-0XA0	1
88	PLC	Control	S7-200 Communication cable PC/PPI RS-232/485	Siemens	6ES7 901-3CB30-0XA0	1
89	SP1-SP3	Control	Plug In DI Surge Suppression, PT 4x1...DC	Phoenix Contact	2838322	3
90	SP1-SP3	Control	Terminal Block Base for Plugable Surge Supression, PT 4x1-BE	Phoenix Contact	2839363	3
91	LS1-LS4	Control	Panel Intrusion Switches, N.C. Contacts	NSI	76030PS	4
92	F21	Control	1-1/2A Fuse, PLC Supply	Bussmann	AGC-1-1/2	1
93	F22	Control	3/4A Fuse, Process Analyzer	Bussmann	AGC-3/4	1
94	PT	Control	Level Transmitter	Endress & Hauser	RMA42AAAM2	2
95	PT	-	Submersible Level Transducer, 20ft Range w/ 50ft Cable & Mounting Clamp (Ship Loose)	Endress & Hauser	FMX21-FE221GGE21APO	1
96	F25-F27	Control	24VDC Fused Terminal Block With Indication	Phoenix Contact	3046030	3
97	F25-F27	Control	1/4A Fuse, Analog Inputs	Bussmann	GMA-250	3
98	TBPP,1,DC,P1, 1A, P2 & 2A	All	Terminal Block, Gray 26-10 AWG Wire	Phoenix Contact	3044102	161
99	TBPP,1,DC,P1, 1A, P2 & 2A	All	Terminal Block End Barrier	Phoenix Contact	3047028	8
100	TBPP,1,DC,P1, 1A, P2 & 2A	All	Terminal Block End Anchor	Phoenix Contact	0800886	17
101	TBP1A, TBP2A	Pump 1 & 2	Terminal Block, Gray 26-8 AWG Wire, TBVFD1A & TBVFD2A	Phoenix Contact	3044131	8
102	GND	Control	Control Panel Ground Bar	Square D	PK5GTA	1
103	-	-	Meter Socket (SHIP LOOSE)	Milbank	UAP3701-RRL	1
104	-	-	Stainless Steel 60' Float (SHIP LOOSE)	Anchor Scientific	P60NO-SST	2
105	-	-	Insulated Ground Neutral (SHIP LOOSE)	Square D	SN400LA	1
106	-	-	Ground Bar Kit (SHIP LOOSE)	Square D	PKDGTJ250	1
107	-	-	NEMA 4A S.S. Disconnect (SHIP LOOSE)	Square D	J250DS	1
108	-	-	Antenna Mast Stabilization Plate (Ship Loose)	EWS	Custom	1
109	-	-	Stainless Steel 'U' Bolt, 2" Pole, 5/16" Diameter Bolt w/ 2-1/2" Threads (SHIP LOOSE)			1
110	-	-	5/16" Stainless Steel Flat Washer for 'U' Bolt (SHIP LOOSE)			2
111	-	-	5/16" Stainless Steel Lock Washer for 'U' Bolt (SHIP LOOSE)			2
112	-	-	5/16" Stainless Steel Nut for 'U' Bolt (SHIP LOOSE)			2
113	-	-	Stainless Steel 'U' Bolt, 1/4" Diameter (SHIP LOOSE)			2
114	-	-	1/4" Stainless Steel 1/4" Nut for 'U' Bolt (SHIP LOOSE)			4
115	-	-	1-1/4" Reduction Bushing for Antenna Tower, ROHN R-TB50 (SHIP LOOSE)	Tessco	36882	1
116	PLC	Control	S7-200 Memory Module	Siemens	6ES7 291BGF230AX0	1
117	N	Power	Incoming Neutral Block	Square D	9080LBA163206	1
118	N	Power	Incoming Neutral Block Cover	Square D	9080LB31	1
119	N	Pump 1 & 2	Neutral Block	Square D	9080LBA161104	2
120	SPNL2	Power	32"X12" Aluminum Sidepanel	EWS	Custom	1
121	CT1-CT6	Pump 1 & 2	Current Transducer; 4-20mA; 10, 20 or 50A Range; Loop Powered	NK Technologies	AT1-420-24L-FF	6
122	DIS1, DIS2	Control	4 Digit Loop Powered Process Indicator; 4-20mA	Red Lion	CUB4LP40	2
123	SS5, SS6	Control	3 Position Selector Switch, 30MM	Square D	9001SKS46BH2	2
124	FM	Control	Flow Meter	Endress & Hauser	50P Compact	1
125	PR	Control	Pressure Transmitter	Endress & Hauser	PMP71-AAC1PG1RAA	1

REVISIONS	BY

IMPROVEMENTS TO WASTEWATER COLLECTION SYSTEM

LIFT STATION CONSTRUCTION DETAILS

ELECTRICAL STANDARDS

FINAL SUBMITTAL

EMERALD COAST UTILITIES AUTHORITY

APPROVED BY:

Drawn
Designed
Checked
Date MAY '13
Scale
Project No
Sheet No. 10
OF 18 Sheets

ALL WORK SHALL BE CONSTRUCTED IN ACCORDANCE WITH THE LATEST EDITION OF THE E.C.U.A. STANDARD SPECIFICATIONS

Horsepower Related Compontents Equipment List															
Item	Tag	240V Supply							208V Supply						
		Horsepower							Horsepower						
		1	2	3	5	7.5	10	15	1	2	3	5	7.5	10	15
Incoming Power Distribution Block PDB	PDB	9080LBA362101	9080LBA362101	9080LBA362101	9080LBA362101	9080LBA362101	9080LBA362101	9080LBA363101	9080LBA362101	9080LBA362101	9080LBA362101	9080LBA362101	9080LBA362101	9080LBA363101	9080LBA363101
Incoming Power Distribution Block PDB Cover	PDB	9080LB23	9080LB23	9080LB23	9080LB23	9080LB23	9080LB23	9080LB33	9080LB23	9080LB23	9080LB23	9080LB23	9080LB23	9080LB33	9080LB33
Main Circuit Breaker	CB1	HDL36060	HDL36060	HDL36070	HDL36090	HDL36110	HDL36125	HDL36175	HDL36045	HDL36050	HDL36060	HDL36090	HDL36110	HDL36150	HDL36200
Emergency Circuit Breaker	CB2	HDL36060	HDL36060	HDL36070	HDL36090	HDL36110	HDL36125	HDL36175	HDL36045	HDL36050	HDL36060	HDL36090	HDL36110	HDL36150	HDL36200
Generator Receptacle	GEN REC	ADR1044-RS	ADR1044-RS	ADR1044-RS	ADR1044-RS	AR20044RS	AR20044RS	AR20044RS	ADR1044-RS	ADR1044-RS	ADR1044-RS	ADR1044-RS	AR20044RS	AR20044RS	AR20044RS
Generator Plug	GEN REC	ACP1044CD-RS	ACP1044CD-RS	ACP1044CD-RS	ACP1044CD-RS	AP20044E-RS	AP20044E-RS	AP20044E-RS	ACP1044CD-RS	ACP1044CD-RS	ACP1044CD-RS	ACP1044CD-RS	AP20044E-RS	AP20044E-RS	AP20044E-RS
Main Power Distribution Block PDB1	PDB1	9080LBA363206	9080LBA363206	9080LBA363206	9080LBA363206	9080LBA363206	9080LBA363206	9080LBA365208	9080LBA363206	9080LBA363206	9080LBA363206	9080LBA363206	9080LBA363206	9080LBA365208	9080LBA365208
Main Power Distribution Block PDB1 Cover	PDB1	9080LB33	9080LB33	9080LB33	9080LB33	9080LB33	9080LB33	9080LB53	9080LB33	9080LB33	9080LB33	9080LB33	9080LB33	9080LB53	9080LB53
Starter Circuit Breaker	CB4, CB5	HDL36015	HDL36015	HDL36020	HDL36030	HDL36045	HDL36060	HDL36080	HDL36015	HDL36015	HDL36020	HDL36035	HDL36050	HDL36060	HDL36090
3 Phase FVNR Starter	M1, M2	8536SAO12V02	8536SBO12V02	8536SBO12V02	8536SCO12V02	8536SCO12V02	8536SDO12V02	8536SDO12V02	8536SAO12V02	8536SBO12V02	8536SBO12V02	8536SCO12V02	8536SCO12V02	8536SDO12V02	8536SEO12V02
Overloads	OL1, OL2	86.25	810.2	814	825	836	845	879	86.90	811.5	815.5	828	845	856	CC74.6
Surge Arrestor	SA	SDLA3D1	SDLA3D1	SDLA3D1	SDLA3D1	SDLA3D1	SDLA3D1	SDLA3D1	SDLA3Y1	SDLA3Y1	SDLA3Y1	SDLA3Y1	SDLA3Y1	SDLA3Y1	SDLA3Y1

Conductor Tag		240V							208V						
		Horsepower							Horsepower						
		1	2	3	5	7.5	10	15	1	2	3	5	7.5	10	15
P-01, P-03 & P-04	Description	(3)#6	(3)#6	(3)#4	(3)#3	(3)#2	(3)#1	(3)#2/0	(3)#8	(3)#8	(3)#6	(3)#3	(3)#2	(3)#1/0	(3)#2/0
	Manufacturer	N/A	N/A	N/A	N/A	N/A	N/A	N/A	N/A	N/A	N/A	N/A	N/A	N/A	N/A
	Catalog #	N/A	N/A	N/A	N/A	N/A	N/A	N/A	N/A	N/A	N/A	N/A	N/A	N/A	N/A
	Length (Ft. Max)	N/A	N/A	N/A	N/A	N/A	N/A	N/A	N/A	N/A	N/A	N/A	N/A	N/A	N/A
	Cable Dia (in)	0.254"	0.254"	0.324"	0.352"	0.384"	0.446"	0.532"	0.216"	0.216"	0.254"	0.352"	0.384"	0.486"	0.532"
	Appleton Connector	(3) -CG-1850	(3) -CG-1850	(3) -CG-3150	(3) -CG-3150	(3) -CG-3150	(3)-CG-3775	(3) -CG-5075	(3) -CG-1850	(3) -CG-1850	(3) -CG-1850	(3) -CG-3150	(3) -CG-3150	(3) -CG-3775	(3) -CG-5075
	Connector Range	0.187"-0.312"	0.187"-0.312"	0.312"-0.437"	0.312"-0.437"	0.312"-0.437"	0.375"-0.500"	0.500"-0.625"	0.187"-0.312"	0.187"-0.312"	0.187"-0.312"	0.312"-0.437"	0.312"-0.437"	0.375"-0.500"	0.500"-0.625"
	Meyers Hub	(3) 1/2" - STA-1	(3) 1/2" - STA-1	(3) 1/2" - STA-1	(3) 1/2" - STA-1	(3) 1/2" - STA-1	(3) 3/4" - STA-2	(3) 3/4" - STA-2	(3) 1/2" - STA-1	(3) 1/2" - STA-1	(3) 1/2" - STA-1	(3) 1/2" - STA-1	(3) 1/2" - STA-1	(3) 3/4" - STA-2	(3) 3/4" - STA-2
P-02A	Description	(1)#10	(1)#10	(1)#8	(1)#8	(1)#6	(1)#6	(1)#6	(1)#10	(1)#10	(1)#10	(1)#8	(1)#6	(1)#6	(1)#6
	Manufacturer	N/A	N/A	N/A	N/A	N/A	N/A	N/A	N/A	N/A	N/A	N/A	N/A	N/A	N/A
	Catalog #	N/A	N/A	N/A	N/A	N/A	N/A	N/A	N/A	N/A	N/A	N/A	N/A	N/A	N/A
	Length (Ft. Max)	N/A	N/A	N/A	N/A	N/A	N/A	N/A	N/A	N/A	N/A	N/A	N/A	N/A	N/A
	Cable Dia (in)	0.164"	0.164"	0.216"	0.216"	0.254"	0.254"	0.254"	0.164"	0.164"	0.164"	0.216"	0.254"	0.254"	0.254"
	Appleton Connector	(1)-GC-1250	(1)-GC-1250	(1)-GC-1850	(1)-GC-1850	(1)-GC-1850	(1)-GC-1850	(1)-GC-1850	(1)-GC-1250	(1)-GC-1250	(1)-GC-1250	(1)-GC-1850	(1)-GC-1850	(1)-GC-1850	(1)-GC-1850
	Connector Range	0.125"-0.187"	0.125"-0.187"	0.187"-0.312"	0.187"-0.312"	0.187"-0.312"	0.187"-0.312"	0.187"-0.312"	0.125"-0.187"	0.125"-0.187"	0.125"-0.187"	0.187"-0.312"	0.187"-0.312"	0.187"-0.312"	0.187"-0.312"
	Hub	(1) 1/2" - STA-1	(1) 1/2" - STA-1	(1) 1/2" - STA-1	(1) 1/2" - STA-1	(1) 1/2" - STA-1	(1) 1/2" - STA-1	(1) 1/2" - STA-1	(1) 1/2" - STA-1	(1) 1/2" - STA-1	(1) 1/2" - STA-1	(1) 1/2" - STA-1	(1) 1/2" - STA-1	(1) 1/2" - STA-1	(1) 1/2" - STA-1
P-02B	Description	(1)#10	(1)#10	(1)#8	(1)#8	(1)#6	(1)#6	(1)#6	(1)#10	(1)#10	(1)#10	(1)#8	(1)#6	(1)#6	(1)#6
	Manufacturer	Southwire	Southwire	Southwire	Southwire	Southwire	Southwire	Southwire	Southwire	Southwire	Southwire	Southwire	Southwire	Southwire	Southwire
P-05 & P-06	Description	(3)#6	(3)#6	(3)#4	(3)#3	(3)#2	(3)#1	(3)#2/0	(3)#8	(3)#8	(3)#6	(3)#3	(3)#2	(3)#1/0	(3)#2/0
	Manufacturer	Southwire	Southwire	Southwire	Southwire	Southwire	Southwire	Southwire	Southwire	Southwire	Southwire	Southwire	Southwire	Southwire	Southwire
	Catalog #	N/A	N/A	N/A	N/A	N/A	N/A	N/A	N/A	N/A	N/A	N/A	N/A	N/A	N/A
	Length (Ft. Max)	N/A	N/A	N/A	N/A	N/A	N/A	N/A	N/A	N/A	N/A	N/A	N/A	N/A	N/A
	Cable Dia (in)	0.254"	0.254"	0.324"	0.352"	0.384"	0.446"	0.532"	0.216"	0.216"	0.254"	0.352"	0.384"	0.486"	0.532"
	Appleton Connector	(3) -CG-1850	(3) -CG-1850	(3) -CG-3150	(3) -CG-3150	(3) -CG-3150	(3)-CG-3775	(3) -CG-5075	(3) -CG-1850	(3) -CG-1850	(3) -CG-1850	(3) -CG-3150	(3) -CG-3150	(3) -CG-3775	(3) -CG-5075
	Connector Range	0.187"-0.312"	0.187"-0.312"	0.312"-0.437"	0.312"-0.437"	0.312"-0.437"	0.375"-0.500"	0.500"-0.625"	0.187"-0.312"	0.187"-0.312"	0.187"-0.312"	0.312"-0.437"	0.312"-0.437"	0.375"-0.500"	0.500"-0.625"
	Hub	(3) 1/2" - STA-1	(3) 1/2" - STA-1	(3) 1/2" - STA-1	(3) 1/2" - STA-1	(3) 1/2" - STA-1	(3) 3/4" - STA-2	(3) 3/4" - STA-2	(3) 1/2" - STA-1	(3) 1/2" - STA-1	(3) 1/2" - STA-1	(3) 1/2" - STA-1	(3) 1/2" - STA-1	(3) 3/4" - STA-2	(3) 3/4" - STA-2
P-07 & P-09	Description	(5)#14 TC	(5)#14 TC	(5)#14 TC	(5)#14 TC	(5)#10 TC	(5)#10 TC	(4)#6 W/G, TC	(5)#14 TC	(5)#14 TC	(5)#14 TC	(5)#12 TC	(5)#10 TC	(4)#8 W/G, TC	(4)#6 W/G, TC
	Manufacturer	Houston Wire	Houston Wire	Houston Wire	Houston Wire	Houston Wire	Houston Wire	Houston Wire	Houston Wire	Houston Wire	Houston Wire	Houston Wire	Houston Wire	Houston Wire	Houston Wire
	Catalog #	HW151 01405	HW151 01405	HW151 01405	HW151 01405	HW151 01005	HW151 01005	HW 154 00604	HW151 01405	HW151 01405	HW151 01405	HW151 01205	HW151 01005	HW 154 00804	HW 154 00604
	Length (Ft. Max)	19 FT	19 FT	19 FT	19 FT	19 FT	19 FT	19 FT	19 FT	19 FT	19 FT	19 FT	19 FT	19 FT	19 FT
	Cable Dia (in)	0.41"	0.41"	0.41"	0.41"	0.58"	0.58"	0.76"	0.41"	0.41"	0.41"	0.46"	0.58"	0.61"	0.76"
	Appleton Connector	(2) -CG-3150	(2) -CG-3150	(2) -CG-3150	(2) -CG-3150	(2) -CG-5075	(2) -CG-5075	(2) - CG-7575	(2) -CG-3150	(2) -CG-3150	(2) -CG-3150	(2) -CG-3750	(2) -CG-5075	(2) -CG-5075	(2) - CG-7575
	Connector Range	0.312"-0.437"	0.312"-0.437"	0.312"-0.437"	0.312"-0.437"	0.500"-0.625"	0.500"-0.625"	0.750"-0.875"	0.312"-0.437"	0.312"-0.437"	0.312"-0.437"	0.375"-0.500"	0.500"-0.625"	0.500"-0.625"	0.750"-0.875"
	Hub	(2) 1/2" - STA-1	(2) 1/2" - STA-1	(2) 1/2" - STA-1	(2) 1/2" - STA-1	(2) 3/4" - STA-2	(2) 3/4" - STA-2	(2) 3/4" - STA-2	(2) 1/2" - STA-1	(2) 1/2" - STA-1	(2) 1/2" - STA-1	(2) 1/2" - STA-1	(2) 3/4" - STA-2	(2) 3/4" - STA-2	(2) 3/4" - STA-2
P-08 & P-10	Description	(3)#14	(3)#14	(3)#14	(3)#14	(3)#10	(3)#10	(3)#6	(3)#14	(3)#14	(3)#14	(3)#12	(3)#10	(3)#8	(3)#6
	Manufacturer	Southwire	Southwire	Southwire	Southwire	Southwire	Southwire	Southwire	Southwire	Southwire	Southwire	Southwire	Southwire	Southwire	Southwire

REVISIONS	BY

IMPROVEMENTS TO WASTEWATER COLLECTION SYSTEM

LIFT STATION CONSTRUCTION DETAILS

ELECTRICAL STANDARDS

FINAL SUBMITTAL

EMERALD COAST UTILITIES AUTHORITY

APPROVED BY:

Drawn:
Designed:
Checked:
Date: MAY '13
Scale:
Project No:
Sheet No. 11
OF 18 Sheets

ALL WORK SHALL BE CONSTRUCTED IN ACCORDANCE WITH THE LATEST EDITION OF THE E.C.U.A. STANDARD SPECIFICATIONS

Power & Control Conductors, CGB's and Hubs

Cable Number	Description	Manufacturer	Catalog Numer	Length (Ft. Max)	Cable Diameter	Appleton Liquidtight Cable Connector	Connector Cable Range	Crouse-Hinds Myers Hub	From Panel/Enclosure	To Panel/Enclosure
P-14	(1) #8 AWG	N/A	N/A	AS REQ'D	N/A	N/A	N/A	N/A	Field	Power Panel
P-15	3-1/C #12 AWG	N/A	N/A	AS REQ'D	N/A	N/A	N/A	N/A	Power Panel	Power Panel
P-16	3-1/C #12 AWG	N/A	N/A	AS REQ'D	N/A	N/A	N/A	N/A	Power Panel	Power Panel
C-01	(16) #14 AWG, Tray Cable	Houston Wire & Cable	HW 151 01416	24 FT	0.68"	(2) - CG-6275	0.625"-0.750"	(2) 3/4" - STA-2	Power Panel	Control Panel
C-02	(5) #14 AWG, Tray Cable	Houston Wire & Cable	HW 151 01405	19 FT	0.41"	(2) - CG-3750	0.375"-0.500"	(2) 1/2" - STA-1	Power Panel	Pump 1 Panel
C-03	(16) #14 AWG, Tray Cable	Houston Wire & Cable	HW 151 01416	22 FT	0.68"	(2) - CG-6275	0.625"-0.750"	(2) 3/4" - STA-2	Pump 2 Panel	Control Panel
C-04	1 Pair #16 SH, Tray Cable	Houston Wire & Cable	HW 120 01601	22 FT	0.33"	(2) - CG-2575	0.250"-0.375"	(2) 3/4" - STA-2	Pump 1 Panel	Control Panel
C-05	1 Pair #16 SH, Tray Cable	Houston Wire & Cable	HW 120 01601	22 FT	0.33"	(2) - CG-2575	0.250"-0.375"	(2) 3/4" - STA-2	Pump 2 Panel	Control Panel
PUMP 1-PWR	Per Mfg Specs	N/A	N/A	N/A	N/A	CG Series based on Mfg Specs	N/A	STA Series based on Mfg Specs	Field	Pump 1 Panel
PUMP 1-MTP	Per Mfg Specs	N/A	N/A	N/A	N/A	CG Series based on Mfg Specs	N/A	STA Series based on Mfg Specs	Field	Pump 1 Panel
PUMP 1-SF	Per Mfg Specs	N/A	N/A	N/A	N/A	CG Series based on Mfg Specs	N/A	STA Series based on Mfg Specs	Field	Pump 1 Panel
PUMP 2-PWR	Per Mfg Specs	N/A	N/A	N/A	N/A	CG Series based on Mfg Specs	N/A	STA Series based on Mfg Specs	Field	Pump 2 Panel
PUMP 2-MTP	Per Mfg Specs	N/A	N/A	N/A	N/A	CG Series based on Mfg Specs	N/A	STA Series based on Mfg Specs	Field	Pump 2 Panel
PUMP 2-SF	Per Mfg Specs	N/A	N/A	N/A	N/A	CG Series based on Mfg Specs	N/A	STA Series based on Mfg Specs	Field	Pump 2 Panel
Float Switch 1	Float Switch Cable	BY OTHERS	N/A	N/A	0.56"	(1) - CG-5050	0.500"-0.625"	(1) 1/2" - STA-1	Field	Control Panel
Float Switch 2	Float Switch Cable	BY OTHERS	N/A	N/A	0.56"	(1) - CG-5050	0.500"-0.625"	(1) 1/2" - STA-1	Field	Control Panel
Pressure Xducer	Pressure Transducer Cable	BY OTHERS	N/A	N/A	0.35"	(1) - G-3150	0.312"-0.437"	(1) 1/2" - STA-1	Field	Control Panel
Antenna COAX	Coaxial Cable	BY OTHERS	N/A	N/A	0.408"	(1) - CG-3750	0.375"-0.500"	(1) 1/2" - STA-1	Field	Control Panel

REVISIONS	BY

IMPROVEMENTS TO WASTEWATER COLLECTION SYSTEM

LIFT STATION CONSTRUCTION DETAILS

ELECTRICAL STANDARDS

FINAL SUBMITTAL

ECUA
EMERALD COAST UTILITIES AUTHORITY

APPROVED BY:

Drawn:
Designed:
Checked:
Date: MAY '13
Scale:
Project No:
Sheet No. 12
OF 18 Sheets

ALL WORK SHALL BE CONSTRUCTED IN ACCORDANCE WITH THE LATEST EDITION OF THE E.C.U.A. STANDARD SPECIFICATIONS

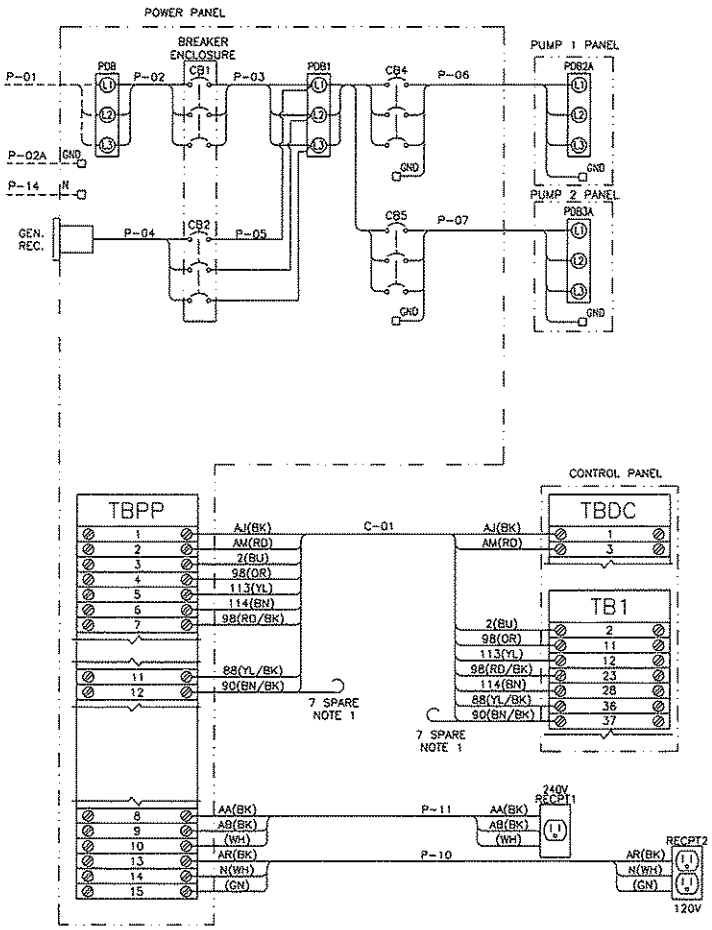

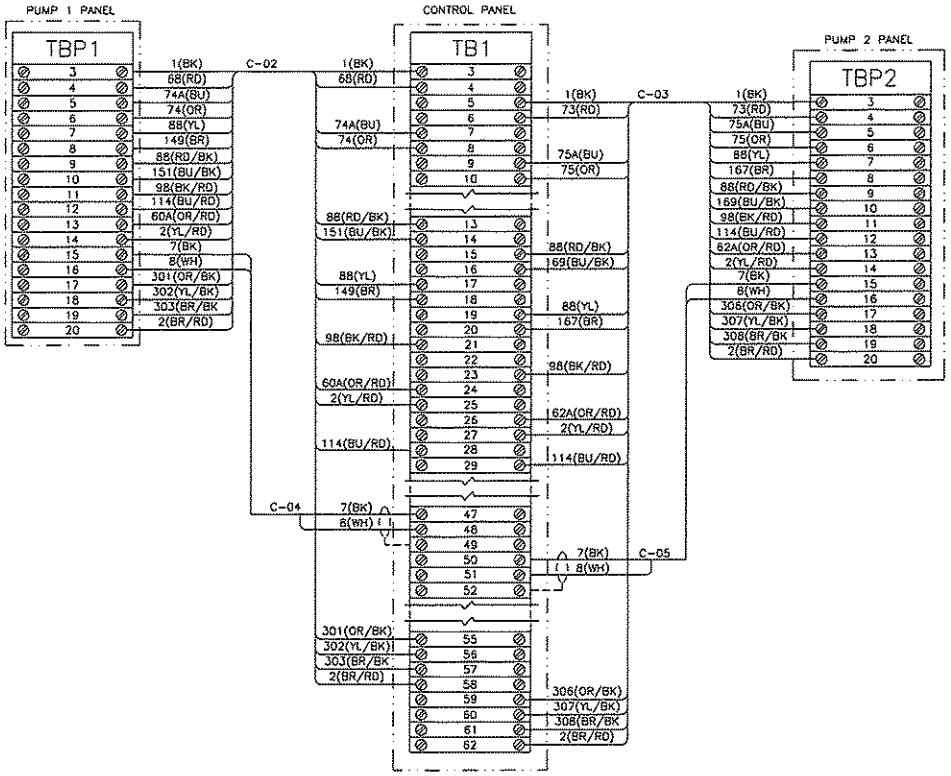

NOTES:

1) ALL SPARE WIRE WILL BE CLEARLY LABELED WITH THE CABLE NUMBER & A SPARE DESIGNATION ON INDIVIDUAL WIRES. THESE SPARES WILL BE LONG ENOUGH TO REACH ANY POINT IN THE PANEL.
2) SPARE CONDUCTORS SHOULD BE TRIMMED AND HEAT SHRINK SHOULD BE USED TO SECURE THE SPARE CONDUCTORS IN THE CABLE.
3) THE INNER CONNECTING CONDUCTORS BETWEEN THE PANELS ARE CODED AS FOLLOWS: THE FIRST GROUP OF CHARACTER IS THE WIRE NUMBER AND THE SECOND GROUP IS THE COLOR (I.E. 1(BK) SIGNIFIES THAT THE WIRE NUMBER IS 1 AND THE COLOR IS BLACK). WIRE COLOR CODE AS FOLLOWS: BK-BLACK, RD-RED, BU-BLUE, OR-ORANGE, YL-YELLOW, BN-BROWN. FOR COLORS THAT ARE DENOTED AS XX/YY, XX IS THE BASE COLOR AND YY IS THE SPIRAL STRIPE (I.E. RD/BK IS A RED WIRE WITH A BLACK SPIRAL STRIPE).
4) SEE SHEETS 11 & 12 FOR PANEL TO PANEL INNER CONNECTING CONDUCTOR AND CABLE DETAILS.

REVISIONS	BY

IMPROVEMENTS TO WASTEWATER COLLECTION SYSTEM

LIFT STATION CONSTRUCTION DETAILS

ELECTRICAL STANDARDS

FINAL SUBMITTAL

ECUA EMERALD COAST UTILITIES AUTHORITY

APPROVED BY:

Drawn:
Designed:
Checked:
Date: MAY '13
Scale:
Project No:
Sheet No. 13
OF 18 Sheets

ALL WORK SHALL BE CONSTRUCTED IN ACCORDANCE WITH THE LATEST EDITION OF THE E.C.U.A. STANDARD SPECIFICATIONS

NOTES:

1. TOP AND BOTTOM OF BASE TO BE LEFT OPEN.
2. DRILL TOP OF BASE TO ATTACH ENCLOSURES AS REQUIRED.
3. DRILL BOTTOM OF BASE TO ATTACH TO SLAB AS REQUIRED.

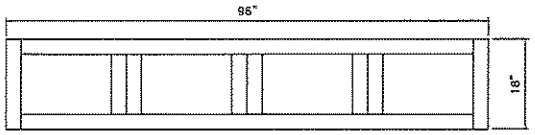

TOP VIEW

ATTENTION

THIS LAYOUT IS ONE OF TWO (2) POSSIBLE CHOICES – SEE SHEET 14A FOR THE OTHER OPTION. IF THIS LAYOUT OPTION IS SELECTED, SEE SHEET 7 FOR ASSOCIATED PANEL LAYOUT DETAILS.

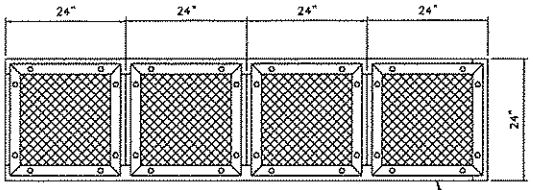

FRONT VIEW

FRONT OF BASE WILL HAVE REMOVABLE PANELS AT EACH OPENING AS SHOWN. ATTACH SCREENS TO BACK SIDE OF REMOVABLE PANELS

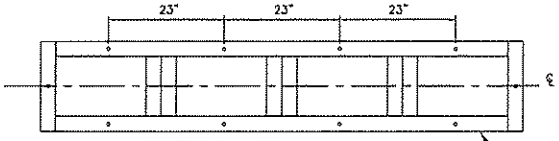

BOTTOM VIEW

DRILL (10) 5/8"ø HOLES AS SHOWN, CENTERED ON ANGLE

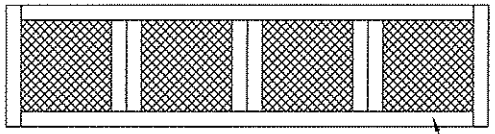

BACK VIEW

ENTIRE BASE MADE FROM 2" STAINLESS STEEL ANGLE, WELDED

REVISIONS	BY

IMPROVEMENTS TO WASTEWATER COLLECTION SYSTEM

LIFT STATION CONSTRUCTION DETAILS

ELECTRICAL STANDARDS

FINAL SUBMITTAL

EMERALD COAST UTILITIES AUTHORITY

APPROVED BY:

Drawn:	
Designed:	
Checked:	
Date:	MAY '13
Scale:	
Project No:	
Sheet No.	14
Of 18 Sheets	

ALL WORK SHALL BE CONSTRUCTED IN ACCORDANCE WITH THE LATEST EDITION OF THE E.C.U.A. STANDARD SPECIFICATIONS

Power Panel Fuse Schedule				
Fuse	Type	Voltage	Amps	Description
F1	KTK-R-1	600	1A	Phase Monitor A Phase
F2	KTK-R-1	600	1A	Phase Monitor B Phase
F3	KTK-R-1	600	1A	Phase Monitor C Phase
F6	AGC-3	250	3A	Power Supply 1 Primary
F7	AGC-3	250	3A	Power Supply 2 Primary

Pump 1 Panel Fuse Schedule				
Fuse	Type	Voltage	Amps	Description
F4	AGC-1	250	1A	Pump 1 Control Power

Pump 2 Panel Fuse Schedule				
Fuse	Type	Voltage	Amps	Description
F5	AGC-1	250	1A	Pump 2 Control Power

Control Panel Fuse Schedule				
Fuse	Type	Voltage	Amps	Description
F8	AGC-10	250	10A	Power Supply 1 Secondary
F9	AGC-10	250	10A	Power Supply 2 Secondary
F10	AGC-10	250	10A	Control Power
F11	AGC-10	250	10A	Batteries
F12	AGC-2	250	2A	Radio Power Supply Primary
F13	AGC-2	250	2A	Radio Power Supply Secondary
F14	AGC-1/4	250	1/4A	Pump 1 Motor Thermal
F15	AGC-1/4	250	1/4A	Pump 2 Motor Thermal
F16	AGC-1/10	250	1/10A	Operator Interface
F17	AGC-1	250	1A	Digital Inputs 0.0-1.4
F18	AGC-1	250	1A	Digital Inputs 1.5-2.7
F19	AGC-2	250	2A	Digital Outputs 0.0-0.7
F20	AGC-2	250	2A	Digital Outputs 1.0-1.7
F21	AGC-1-1/2	250	1-1/2A	PLC Power
F22	AGC-3/4	250	3/4A	Process Transmitter Supply
F23	AGC-1/10	250	1/10A	Analog Inputs
F24	AGC-1/10	250	1/10A	Analog Outputs
F25	GMA-1/4	250	1/4A	Analog Input 2
F26	GMA-1/4	250	1/4A	Analog Input 3
F27	GMA-1/4	250	1/4A	Analog Input 4

HMI BUTTON LEGEND	
F1	FAULT RESET/ENABLE INTRUSION
SHIFT+F1	DISABLE INTRUSION
F2	ALTERNATE PUMP ASSIGNMENTS
F3	RESET PUMP 1 RUNTIME
SHIFT+F3	RESET PUMP 2 RUNTIME
F4	ALARMS SCREEN
F5	OVERVIEW SCREEN
F6	PUMP 1 SCREEN
F7	PUMP 2 SCREEN
F8	SETPOINTS SCREEN

CONTROL PANEL ISR INFORMATION TAGS

THIS AREA IN BLUE IS FOR INTRINSICALLY SAFE CIRCUITS AND DEVICES ONLY. THIS AREA INCLUDES THE AIR SPACE DIRECTLY IN FRONT OF THE BLUE AREA BETWEEN THE BACKPANEL AND THE ENCLOSURE WALLS AND DOOR INCLUDING THE BOTTOM OF THE ENCLOSURE. ONLY INTRINSICALLY SAFE DEVICES AND WIRING ARE ALLOWED IN THIS AREA. DO NOT ROUTE NON-INTRINSICALLY SAFE WIRING THROUGH THIS AREA OF ENCLOSURE.

WARNING

SUBSTITUTION OF COMPONENTS MAY IMPAIR INTRINSIC SAFETY

CONTROL PANEL EXTERIOR TAG INFORMATION

WARNING

TO PREVENT IGNITION OF FLAMMABLE OR COMBUSTIBLE ATMOSPHERES DISCONNECT POWER BEFORE SERVICING

PROVIDES INTRINSICALLY SAFE CIRCUIT EXTENSIONS FOR USE IN CLASS 1, GROUPS A, B, C, AND D WHEN CONNECTED PER REFERENCE DRAWINGS ON MAIN NAMEPLATE LABEL

CONTROL PANEL DEADFRONT TAG INFORMATION

SECURELY FASTEN ALL INNER DOOR LATCHES BEFORE CLOSING OUTER DOOR. FAILURE TO FOLLOW THESE INSTRUCTIONS COULD CAUSE THE OUTER DOOR TO JAM WHEN RE-OPENED

240V Nameplate Data							
Total Load (FLA)	46	51	57	68	82	94	122
Motor Hp	1	2	9.6	15.2	22	28	42
Motor FLA	4.2	6.8	4.8	7.6	11	14	21

208V Nameplate Data							
Total Load (FLA)	31	37	44	57	72	86	118
Motor Hp	1	2	3	5	7.5	10	15
Motor FLA	4.8	7.8	11	17.5	25.3	32.2	48.3

Torque Rating Table														
	240V Supply							208V Supply						
	Horsepower							Horsepower						
Component	1	2	3	5	7.5	10	15	1	2	3	5	7.5	10	15
Incoming Distribution Block (PDB1)	120lb-in/13.5N-m	120lb-in/13.5N-m	120lb-in/13.5N-m	120lb-in/13.5N-m	120lb-in/13.5N-m	120lb-in/13.5N-m	275lb-in/31.0N-m	40lb-in/4.5N-m	40lb-in/4.5N-m	120lb-in/13.5N-m	120lb-in/13.5N-m	120lb-in/13.5N-m	275lb-in/31.0N-m	275lb-in/31.0N-m
Incoming Neutral Block	40lb-in/4.5N-m	40lb-in/4.5N-m	40lb-in/4.5N-m	40lb-in/4.5N-m	40lb-in/4.5N-m	40lb-in/4.5N-m	40lb-in/4.5N-m	40lb-in/4.5N-m	40lb-in/4.5N-m	40lb-in/4.5N-m	40lb-in/4.5N-m	40lb-in/4.5N-m	40lb-in/4.5N-m	40lb-in/4.5N-m
Main Ground Block	20lb-in/2.2N-m	20lb-in/2.2N-m	20lb-in/2.2N-m	25lb-in/2.8N-m	35lb-in/4.0N-m	35lb-in/4.0N-m	35lb-in/4.0N-m	20lb-in/2.2N-m	20lb-in/2.2N-m	20lb-in/2.2N-m	25lb-in/2.8N-m	35lb-in/4.0N-m	35lb-in/4.0N-m	35lb-in/4.0N-m
Motor Distribution Block (PDB2 & 3)	35lb-in/4.0N-m	35lb-in/4.0N-m	35lb-in/4.0N-m	35lb-in/4.0N-m	35lb-in/4.0N-m	35lb-in/4.0N-m	120lb-in/13.5N-m	35lb-in/4.0N-m	35lb-in/4.0N-m	35lb-in/4.0N-m	35lb-in/4.0N-m	35lb-in/4.0N-m	40lb-in/4.5N-m	120lb-in/13.5N-m
Motor Ground Block	20lb-in/2.2N-m	20lb-in/2.2N-m	20lb-in/2.2N-m	20lb-in/2.2N-m	20lb-in/2.2N-m	20lb-in/2.2N-m	35lb-in/4.0N-m	20lb-in/2.2N-m	20lb-in/2.2N-m	20lb-in/2.2N-m	20lb-in/2.2N-m	20lb-in/2.2N-m	35lb-in/4.0N-m	35lb-in/4.0N-m

REVISIONS	BY

IMPROVEMENTS TO WASTEWATER COLLECTION SYSTEM

LIFT STATION CONSTRUCTION DETAILS

ELECTRICAL STANDARDS

FINAL SUBMITTAL

EMERALD COAST UTILITIES AUTHORITY

APPROVED BY:

Drawn:
Designed:
Checked:
Date: MAY '13
Scale:
Project No:
Sheet No. 15
OF 18 Sheets

ALL WORK SHALL BE CONSTRUCTED IN ACCORDANCE WITH THE LATEST EDITION OF THE E.C.U.A. STANDARD SPECIFICATIONS

HAZARDOUS (CLASSIFIED) LOCATION	NON-HAZARDOUS LOCATION
CLASS I, ZONE 0 OR 1, GROUPS IIC, IIB, IIA or CLASS I, DIVISION 1, GROUPS A,B,C,D CLASS II, DIVISION 1, GROUPS E,F,G CLASS III, DIVISION 1	CLASS I, ZONE 2, GROUPS IIC, IIB, IIA or CLASS I, DIVISION 2, GROUPS A,B,C,D

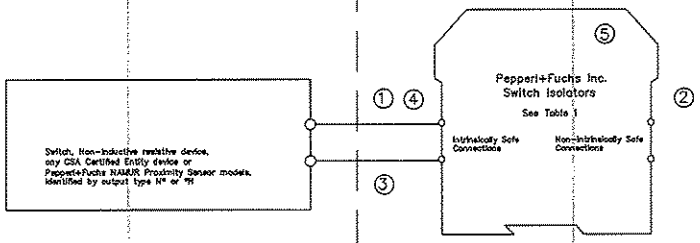

Notes:

① The intrinsically safe wiring must be installed in accordance with the Canadian Electrical Code CSA C22.1, Part 1, Appendix F.

② Barriers listed in Table 1 shall not be connected to any device that uses or generates in excess of 250Vrms or DC unless it has been determined that the voltage is adequately isolated from the barrier. Barriers listed in Table 2 shall not be connected to any device that uses or generates in excess of 60Vrms or DC unless the voltage is limited by an adequate means.

③ Any combination of up to 10 channels of the barriers listed in Table 1 or Table 2 may be connected in parallel and connected to a switch in a hazardous location.

④ The Entity concept allows interconnection of intrinsically safe apparatus with associated apparatus not specifically examined in combination as a system when the approved values of Voc and Isc for the associated apparatus are less than or equal to Vmax and Imax for the intrinsically safe apparatus and the approved values of Ca and La for the associated apparatus are greater than Ci + Ccable and Li + Lcable, respectively, for the intrinsically safe apparatus.

⑤ The following models with part number greater than 100000 are approved for mounting in a Class I, Zone 2, Groups IIC,IIB,IIA or Class I, Division 2, Groups A,B,C,D hazardous (classified) location: KF**-SR2-EX1.W, KF**-SR2-EX1.W.LB, KF**-SR2-EX2.W, KFD2-SR2-EX2.2S, KFD2-ST2-EX1.*, KFD2-ST2-EX2.*, KFD2-SOT2-EX1.*, KFD2-SOT2-EX2.*.

WARNING: Substitution of components may impair intrinsic safety and/or suitability for use in Class I, Division 2, Groups A,B,C,D or Class I, Zone 2, Groups IIC,IIB,IIA.
ADVERTISSEMENT: La substitution de composants peut compromettre la sécurité intrinsèque.

TABLE 1: Barriers Certified to CSA Standard C22.2 No. 157 (Um = 250 V)

Model Numbers	Terminals	SYSTEM V_{max}(V)	SYSTEM Res. (Ω)	ENTITY V_{oc} (V)	ENTITY I_{sc}(mA)	ENTITY C_a(uF) GRPS A,B	ENTITY C_a(uF) GRPS C,E	ENTITY C_a(uF) GRPS D,F,G	ENTITY L_a(mH) GRPS A,B	ENTITY L_a(mH) GRPS C,E	ENTITY L_a(mH) GRPS D,F,G
KFD2-SOT-Ex1*,KFD2-SOT-Ex2* KFD2-SR-Ex1*,KFD2-SR-Ex2* KFD2-SRT-Ex1* KFD2-ST-Ex1*,KFD2-ST-Ex2* KFA5-SR2-Ex1*,KFA5_SR2-Ex2* KFA6-SR2-Ex1*,KFA6-SR2-Ex2* KFD2-SR2-Ex1*,KFD2-SR2-Ex2*	1-3, 2-3; 4-6, 5-6	12.6	650	12.9	19.8	1.273	3.820	10.16	84.88	298.7	744.4
KFA5-SOT2-Ex1*,KFA5-SOT2-Ex2* KFA6-SOT2-Ex1*,KFA6-SOT2-Ex2*	1-3, 2-3; 4-6, 5-6	10.5	811	10.5	13.0	2.66	7.9	21.3	192	671	1000

TABLE 2: Barriers Certified to CSA Standard E79-11 (Um = 60 V)

Model Numbers	Terminals	Load Parameters U_o (V_{oc})	I_o (I_{sc})	C_a(uF) GRPS IIC (A,B)	C_a(uF) GRPS IIB (C,E)	C_a(uF) GRPS IIA (D,F,G)	L_a(mH) GRPS IIC (A,B)	L_a(mH) GRPS IIB (C,E)	L_a(mH) GRPS IIA (D,F,G)
KFD2-SOT2-Ex1*,KFD2-SOT2-Ex2* KFD2-ST2-Ex1*,KFD2-ST2-Ex2*	1-3, 2-3; 4-6, 5-6	10.5	13.0	2.66	7.9	21.3	192	671	1000

Revisions	ECO No.						
2-20-2008							
In.	Date	Cons.	Resp.	Appr.			

No changes without prior permission
CSA
THIS DRAWING CONTAINS PROPRIETARY DATA. NO DISCLOSURE, REPRODUCTION, OR USE OF ANY PART MAY BE MADE EXCEPT BY WRITTEN PERMISSION.

Pepperl+Fuchs® Inc.
Twinsburg, OH 44087-2202

Repl.No. -

Title Installation Drawing for CSA Certified Switch Isolators

Draw. No. 116-0047j

Sh. 1 of 2

Revisions	ECO No.						
2-20-2008							
In.	Date	Cons.	Resp.	Appr.			

No changes without prior permission
CSA
THIS DRAWING CONTAINS PROPRIETARY DATA. NO DISCLOSURE, REPRODUCTION, OR USE OF ANY PART MAY BE MADE EXCEPT BY WRITTEN PERMISSION.

Pepperl+Fuchs® Inc.
Twinsburg, OH 44087-2202

Repl.No. -

Title Installation Drawing for CSA Certified Switch Isolators

Draw. No. 116-0047j

Sh. 2 of 2

REVISIONS	BY

IMPROVEMENTS TO WASTEWATER COLLECTION SYSTEM
LIFT STATION CONSTRUCTION DETAILS
ELECTRICAL STANDARDS
FINAL SUBMITTAL

ECUA
EMERALD COAST UTILITIES AUTHORITY

APPROVED BY:

Drawn:
Designed:
Checked:
Date: MAY '13
Scale:
Project No:
Sheet No. 16
OF 18 Sheets

GENERAL ELECTRICAL NOTES

NEW WORK:

1. ENTIRE ELECTRICAL INSTALLATION SHALL BE IN ACCORDANCE WITH THE LATEST EDITION (UNLESS NOTED OTHERWISE) OF THE FOLLOWING CODES AND STANDARDS:
   1.1. NATIONAL ELECTRICAL CODE (NFPA 70).
   1.2. STANDARD FOR FIRE PROTECTION IN WASTEWATER TREATMENT AND COLLECTION FACILITIES (NFPA 820).
2. THE CONTRACTOR SHALL BE RESPONSIBLE FOR READING ALL PROJECT SPECIFICATIONS AND WILL BE RESPONSIBLE FOR MEETING ALL REQUIREMENTS OUTLINED IN THE SPECIFICATIONS.
3. CONTRACTOR SHALL COORDINATE ALL WORK WITH OTHER TRADES PRIOR TO ROUGH-IN AND INSTALLATION.
4. WORKING SPACE FOR ALL ELECTRICAL AND CONTROL EQUIPMENT OPERATING AT 600V VOLTS OR LESS TO GROUND AND LIKELY TO REQUIRE EXAMINATION, ADJUSTMENT, SERVICING, OR MAINTENANCE WHILE ENERGIZED SHALL COMPLY WITH NEC, ARTICLE 110.26.
5. THE ELECTRICAL DESIGN PROVIDES A NUMBER OF BRANCH CIRCUITS, AMPACITY AND OVERCURRENT PROTECTION FOR OTHER DIVISIONS DESIGN BASIS EQUIPMENT CONFORMING TO MANUFACTURER'S SPECIFICATIONS AVAILABLE AT TIME OF DESIGN. THE CONTRACTOR SHALL VERIFY ALL EQUIPMENT LOADS PRIOR TO ROUGH-IN. IF REQUIREMENTS OF EQUIPMENT ACTUALLY PROVIDED UNDER CONTRACT FOR CONSTRUCTION ARE DIFFERENT, CONTRACTOR SHALL MAKE ALL CHANGES NECESSARY WITHOUT INCREASE IN THE CONTRACT AMOUNT. SUCH CHANGES SHALL BE BASED UPON REQUIREMENTS, NAMEPLATE VALUES AND CODE REQUIREMENTS, WHICHEVER IS MORE STRINGENT, AND MAY INCLUDE, BUT ARE NOT LIMITED TO: SIZE OF CONDUCTORS, SIZE OF CONDUIT, QUANTITY OF CONDUCTORS AND CONDUITS, TYPE AND SIZE OF CIRCUIT BREAKER OR DISCONNECT, OVERLOADS, FULL-VOLTAGE STARTERS, REDUCED VOLTAGE SOFT STARTERS, VARIABLE FREQUENCY DRIVES, AND FUSE PROTECTION.
6. THE ELECTRICAL CONTRACTOR IS REQUIRED TO COORDINATE, PROVIDE, AND INSTALL A FULLY OPERATIONAL AND CODE COMPLIANT ELECTRICAL SYSTEM. THIS MAY INCLUDE THE ADDITION OF ELECTRICAL ITEMS NOT SHOWN ON THE ELECTRICAL PLANS, BUT REQUIRED FOR SYSTEM OPERATION.
7. CONTRACTOR SHALL COORDINATE INSTALLATION OF ELECTRICAL SERVICE WITH ELECTRICAL UTILITY COMPANY PROVIDING ELECTRICAL SERVICE TO FACILITY. CONTRACTOR SHALL PAY ALL FEES ASSESSED BY ELECTRICAL UTILITY COMPANY TO PROVIDE ELECTRICAL SERVICE TO FACILITY.
8. CONTRACTOR SHALL EXCAVATE AND CONDUCT DEMOLITION SO AS TO AVOID DAMAGE TO EXISTING UTILITIES AND OTHER UNDERGROUND OR CONCEALED ITEMS. IF EXISTING OR NEW ITEMS ARE DAMAGED, THE CONTRACTOR SHALL NOTIFY THE OWNER AT ONCE OF ALL DAMAGE AND SHALL REPAIR (OR REPLACE IF NECESSARY) TO THE ORIGINAL CONDITION TO THE SATISFACTION OF OWNER AND ENGINEER AT NO CHARGE IN THE CONTRACT AMOUNT.
9. THE CONTRACTOR SHALL BE RESPONSIBLE FOR PROVIDING DETAILED ELECTRICAL AND CONTROL EQUIPMENT LAYOUT DRAWINGS TO THE ENGINEER AND OWNER FOR APPROVAL PRIOR TO INSTALLATION.
10. ALL CONDUITS NOT LOCATED UNDER SLAB SHALL HAVE A MINIMUM BURIAL DEPTH OF 42", UNLESS NOTED OTHERWISE.
11. CONDUITS SHALL BE BURIED 42" (MINIMUM) BELOW GRADE WITH MARKER TAPE 6" ABOVE TOP OF CONDUIT, UNLESS NOTED OTHERWISE.
12. MINIMUM SIZE CONDUIT SHALL BE 1" (UNLESS NOTED OTHERWISE).
13. CONDUIT ROUTINGS AND DEVICE/EQUIPMENT LOCATIONS SHOWN ARE DIAGRAMMATIC ONLY. CONTRACTOR SHALL FIELD ROUTE AND LOCATE AS REQUIRED.
14. CONTRACTOR SHALL PROVIDE PULL BOXES IN POWER CIRCUIT CONDUIT AS REQUIRED TO LIMIT THE NUMBER OF BENDS TO A MAXIMUM OF 270° OR THREE 90° BENDS.
15. ALL WIRE SHALL BE COPPER.
16. ALL ELECTRICAL CIRCUITS SHALL INCLUDE A GREEN GROUNDING CONDUCTOR SIZED PER NEC.
17. CONDUCTORS SHALL BE TERMINATED ON TERMINAL BLOCKS.
18. THE CONTRACTOR SHALL TAG ALL POWER AND CONTROL SYSTEM CABLING AT ALL TERMINATION POINTS.
19. FINAL CONNECTION TO ALL EQUIPMENT IS SHOWN DIAGRAMMATIC. PROVIDE FINAL CONNECTION AS REQUIRED PER MANUFACTURER OF EQUIPMENT.
20. CONTRACTOR SHALL MAINTAIN A SET OF PRINTS AND MARK-UP DURING CONSTRUCTION TO REFLECT "AS-BUILT" CONDITIONS. PRINTS SHALL BE DELIVERED TO THE ENGINEER UPON COMPLETION OF THE PROJECT.
21. ALL HARDWARE SHALL BE STAINLESS STEEL.
22. ALUMINUM CONDUIT SHALL BE COATED WITH (2) WRAPS OF ANTI-CORROSION TAPE OR RUN THROUGH A SCHEDULE 80 PVC SLEEVE TO WHEN IN CONTACT WITH CONCRETE.
23. BARE COPPER SHALL BE COATED WITH (2) WRAPS OF ANTI-CORROSION TAPE OR RUN THROUGH A SCHEDULE 80 PVC SLEEVE TO WHEN IN CONTACT WITH CONCRETE.
24. ENGINEER OF RECORD SHALL BE RESPONSIBLE FOR FINAL SIZING OF ALL EQUIPMENT.

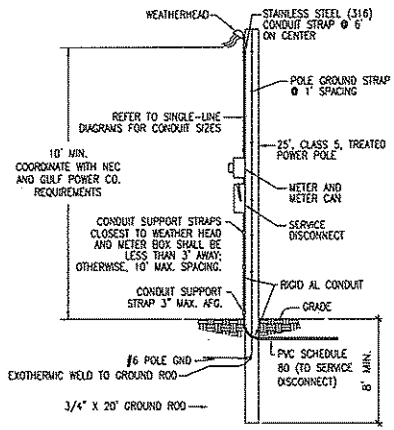

SERVICE LATERAL CONDUIT SHALL BE 3" (MIN) SCHEDULE 80 PVC BELOW GRADE AND 3" (MIN) RIGID AL CONDUIT ABOVE GRADE. ANY REQUIREMENTS BY THE UTILITY COMPANY SHALL PREVAIL OVER THE REQUIREMENTS OUTLINED HERE AND SHALL BE COORDINATED BY THE ELECTRICAL CONTRACTOR PRIOR TO INSTALLATION.

A3 UTILITY POLE DETAIL
NOT TO SCALE

ALL WORK SHALL BE CONSTRUCTED IN ACCORDANCE WITH THE LATEST EDITION OF THE E.C.U.A. STANDARD SPECIFICATIONS

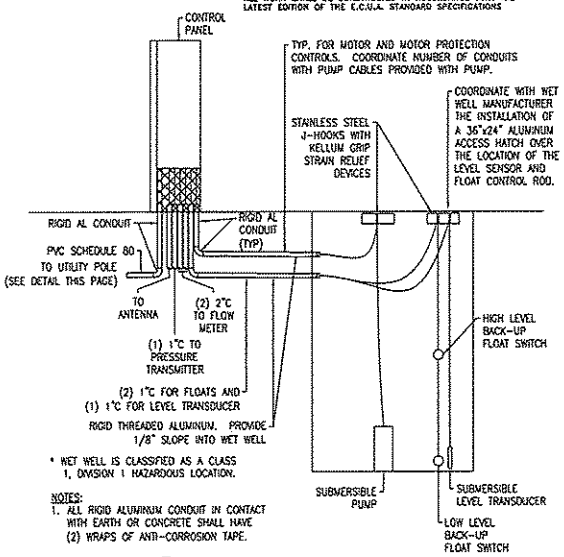

* WET WELL IS CLASSIFIED AS A CLASS 1, DIVISION 1 HAZARDOUS LOCATION.

NOTES:
1. ALL RIGID ALUMINUM CONDUIT IN CONTACT WITH EARTH OR CONCRETE SHALL HAVE (2) WRAPS OF ANTI-CORROSION TAPE.

B4 TYPICAL WET WELL SECTION DETAIL
NOT TO SCALE

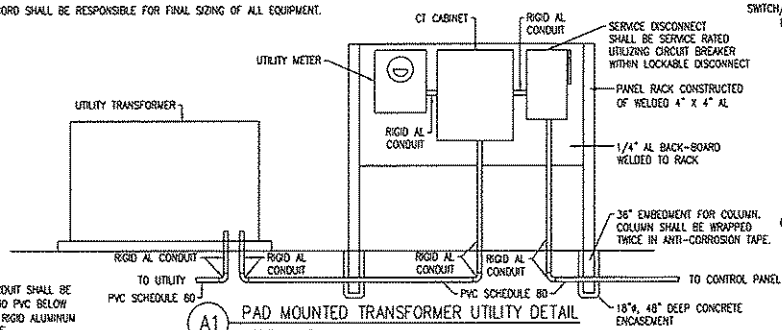

* SERVICE LATERAL CONDUIT SHALL BE 3" (MIN) SCHEDULE 80 PVC BELOW GRADE AND 3" (MIN) RIGID ALUMINUM CONDUIT ABOVE GRADE.

A1 PAD MOUNTED TRANSFORMER UTILITY DETAIL
NOT TO SCALE

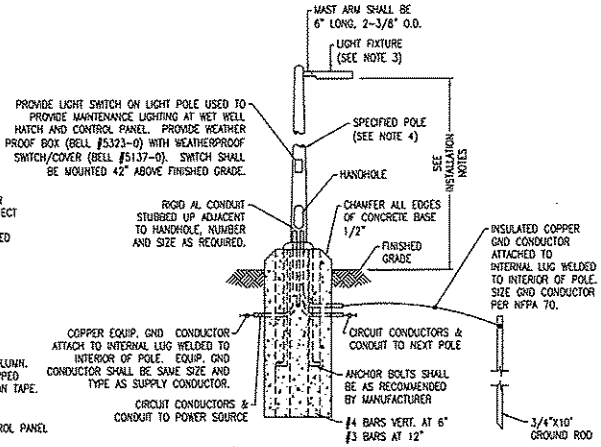

A4 LIGHT POLE INSTALLATION DETAIL
NOT TO SCALE

LIGHTING PERFORMANCE CRITERIA:
1. LIGHTING FIXTURE LAYOUT SHALL BE BASED UPON ACHIEVING 20 FOOT CANDLES (+/- 20%) AT THE FRONT OF THE CONTROL PANEL (WORK-PLANE OF 24" AFG) AND AT THE WET WELL ACCESS HATCH (WORKPLANE OF 0" AFG).
2. GENERAL SECURITY LIGHTING SHALL ENCOMPASS ACCESS GATE AND ALL PIPING/EQUIPMENT AT A MIN: AVERAGE 1 FOOT-CANDLE (+/- 20%, AT WORKPLANE OF 0" AFG).
3. REFER TO LIGHTING CONTROL DIAGRAM ON SHEET No. 18 FOR ADDITIONAL REQUIREMENTS.

LIGHT POLE INSTALLATION NOTES:
1. BURIAL AND DIAMETER DIMENSIONS INDICATED ARE FOR NOMINAL MINIMAL SIZES ONLY. FINAL DIMENSIONS SHALL BE DETERMINED BY A REGISTERED STRUCTURAL ENGINEER IN THE STATE OF FLORIDA, BASED UPON FIXTURES PROVIDED. PROVIDE SIGNED, DATED, AND SEALED PLANS FOR EACH INSTALLATION TYPE AND FIXTURE TYPE AS PART OF LIGHTING SUBMITTAL PACKAGE.
2. THE POLE AND FOUNDATION DESIGN SHALL BE BY A DELEGATED PROFESSIONAL ENGINEER TO MEET THE FOLLOWING CRITERIA:
   2.1. DESIGN WIND SPEED 160 MPH WITH A 1.3 GUST FACTOR. EXPOSURE CATEGORY C.
   2.2. SIZE EMBEDMENT FOR A MAXIMUM PERMANENT POLE DEFLECTION AFTER DESIGN WIND SPEED EVENT OF 1.00".
   2.3. ALUMINUM, ROUND OR SQUARE, TAPERED.
3. FIXTURE SHALL BE AMERICAN ELECTRIC LIGHTING AT82 FIXTURE, 40 LED, 1000mA DRIVER, 120V, TYPE 4, WITH PHOTOCONTROL.
4. REFER TO SPECIFICATIONS SECTION 16521 "EXTERIOR LIGHTING" FOR ADDITIONAL REQUIREMENTS.
5. LIGHT FIXTURES SHALL BE MOUNTED AT 15'-0" (MAXIMUM) ABOVE FINISHED GRADE.

REVISIONS	BY

IMPROVEMENTS TO WASTEWATER COLLECTION SYSTEM
LIFT STATION CONSTRUCTION DETAILS
ELECTRICAL STANDARDS
FINAL SUBMITTAL

ECUA
EMERALD COAST UTILITIES AUTHORITY

APPROVED BY:

Drawn	
Designed	
Checked	
Date	MAY '13
Scale	
Project No	
Sheet No.	17
	Of 18 Sheets

ALL WORK SHALL BE CONSTRUCTED IN ACCORDANCE WITH THE LATEST EDITION OF THE E.C.U.A. STANDARD SPECIFICATIONS

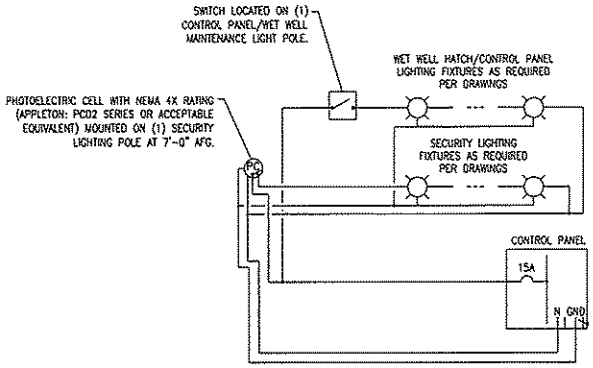

C2 TYPICAL LIGHTING CONTROL DIAGRAM
NOT TO SCALE

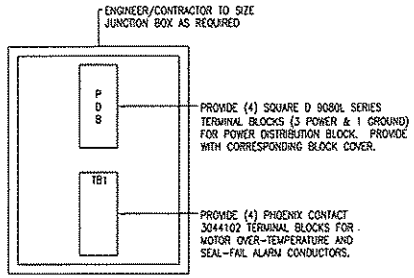

INTERIOR ELEVATION

DETAIL NOTES:

1. ALL TERMINAL BLOCKS SHALL BE PROVIDED WITH CORRESPONDING END BRACKETS AND END COVERS.
2. PROVIDE SEPARATE GROUND LUG IN EACH JUNCTION BOX, BONDED TO JUNCTION BOX.

A1 TYPICAL PUMP JUNCTION BOX ELEVATION
NOT TO SCALE

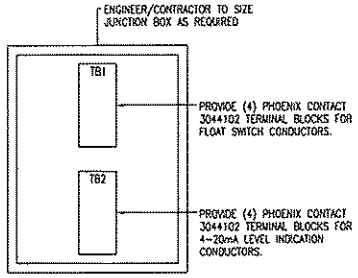

INTERIOR ELEVATION

DETAIL NOTES:

1. ALL TERMINAL BLOCKS SHALL BE PROVIDED WITH CORRESPONDING END BRACKETS AND END COVERS.
2. PROVIDE SEPARATE GROUND LUG IN EACH JUNCTION BOX, BONDED TO JUNCTION BOX.

A3 TYPICAL LEVEL INDICATION JUNCTION BOX ELEVATION
NOT TO SCALE

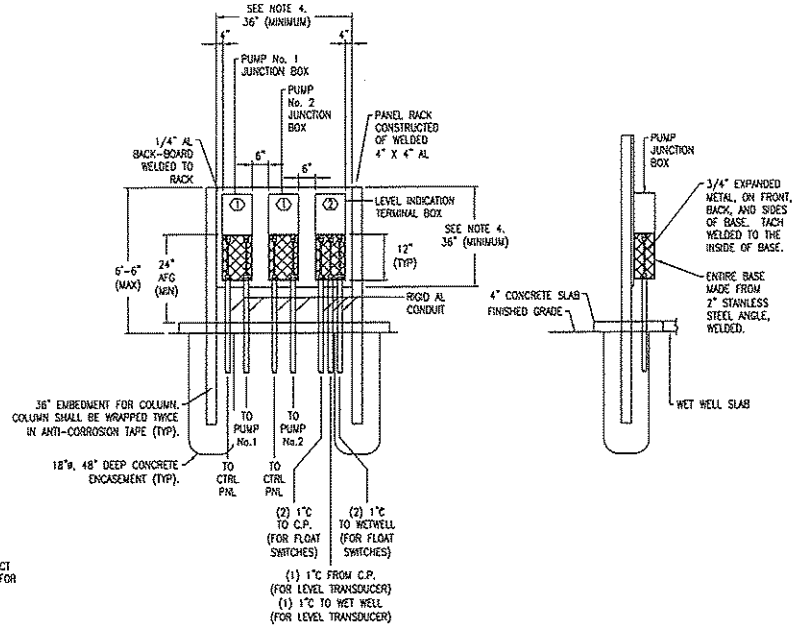

FRONT ELEVATION

SIDE ELEVATION

DETAIL NOTES:

1. THIS DETAIL SHALL ONLY APPLY WHEN THE CONTROL PANEL CANNOT BE PLACED WITHIN 6'-0" OF THE WET WELL TO ALLOW FOR CONNECTION OF STANDARD 50 FOOT PUMP CABLE CONNECTIONS.
2. BACKBOARD SHALL BE PLACED AT THE EDGE OF THE WET WELL SLAB BETWEEN THE WET WELL AND CONTROL PANEL.
3. JUNCTION BOXES SHALL BE MOUNTED SUCH THAT THEY ARE FACING THE WET WELL.
4. ENGINEER/CONTRACTOR SHALL SIZE JUNCTION BOXES AND BACKBOARDS BASED UPON INSTALLATION REQUIREMENTS PROVIDED AT TIME OF DESIGN.

KEY NOTES

① REFER TO "TYPICAL PUMP JUNCTION BOX ELEVATION" (THIS SHEET) FOR ADDITIONAL REQUIREMENTS.

② REFER TO "TYPICAL LEVEL INDICATION JUNCTION BOX ELEVATION" (THIS SHEET) FOR ADDITIONAL REQUIREMENTS.

A4 TYPICAL PUMP JUNCTION BOXES
NOT TO SCALE

REVISIONS	BY

IMPROVEMENTS TO WASTEWATER COLLECTION SYSTEM

LIFT STATION CONSTRUCTION DETAILS

ELECTRICAL STANDARDS

FINAL SUBMITTAL

ECUA EMERALD COAST UTILITIES AUTHORITY

APPROVED BY:

Drawn	
Designed	
Checked	
Date	MAY '13
Scale	
Project No	
Sheet No.	18
	OF 18 Sheets

ALL WORK SHALL BE CONSTRUCTED IN ACCORDANCE WITH THE LATEST EDITION OF THE E.C.U.A. STANDARD SPECIFICATIONS

240-208V 3Ø 1HP – 20HP VARIABLE FREQUENCY DRIVE ELECTRICAL STANDARD – ALTERNATE

FOR

EMERALD COAST UTILITY AUTHORITY
ESCAMBIA COUNTY, FL

SHEET NO.	SHEET DESCRIPTION
1	MAIN POWER DISTRIBUTION SCHEMATIC
2	CONTROL SCHEMATIC
3	DIGITAL INPUTS SCHEMATIC
4	DIGITAL OUTPUTS & ANALOG INPUTS SCHEMATIC
5	ANALOG OUTPUTS & STARTER CONTROL SCHEMATIC
6	TERMINAL BLOCK LAYOUT AND FIELD CONNECTIONS
7A	BACK-TO-BACK EXTERIOR PANEL LAYOUT & FIELD CONDUIT REQUIREMENTS
8	POWER & PUMP 1 INTERNAL PANEL LAYOUTS
9	PUMP 2 & CONTROL PANEL INTERNAL LAYOUTS
10	EQUIPMENT LIST
11	HORSEPOWER RELATED EQUIPMENT & POWER CONDUCTORS
12	PANEL TO PANEL CONDUCTORS & EQUIPMENT
13	PANEL TO PANEL WIRING
14A	BACK-TO-BACK STAINLESS STEEL FRAME LAYOUT
15	TABLES, LEGENDS & TAGS
16	ISR INSTRUCTIONS
17	GENERAL NOTES AND DETAILS
18	GENERAL NOTES AND DETAILS

REVISIONS	BY

IMPROVEMENTS TO WASTEWATER COLLECTION SYSTEM

LIFT STATION CONSTRUCTION DETAILS

ELECTRICAL STANDARDS

FINAL SUBMITTAL

EMERALD COAST UTILITIES AUTHORITY

APPROVED BY:

Drawn:
Designed:
Checked:
Date: MAY '13
Scale:
Project No:
Sheet No. 0
Of 18 Sheets

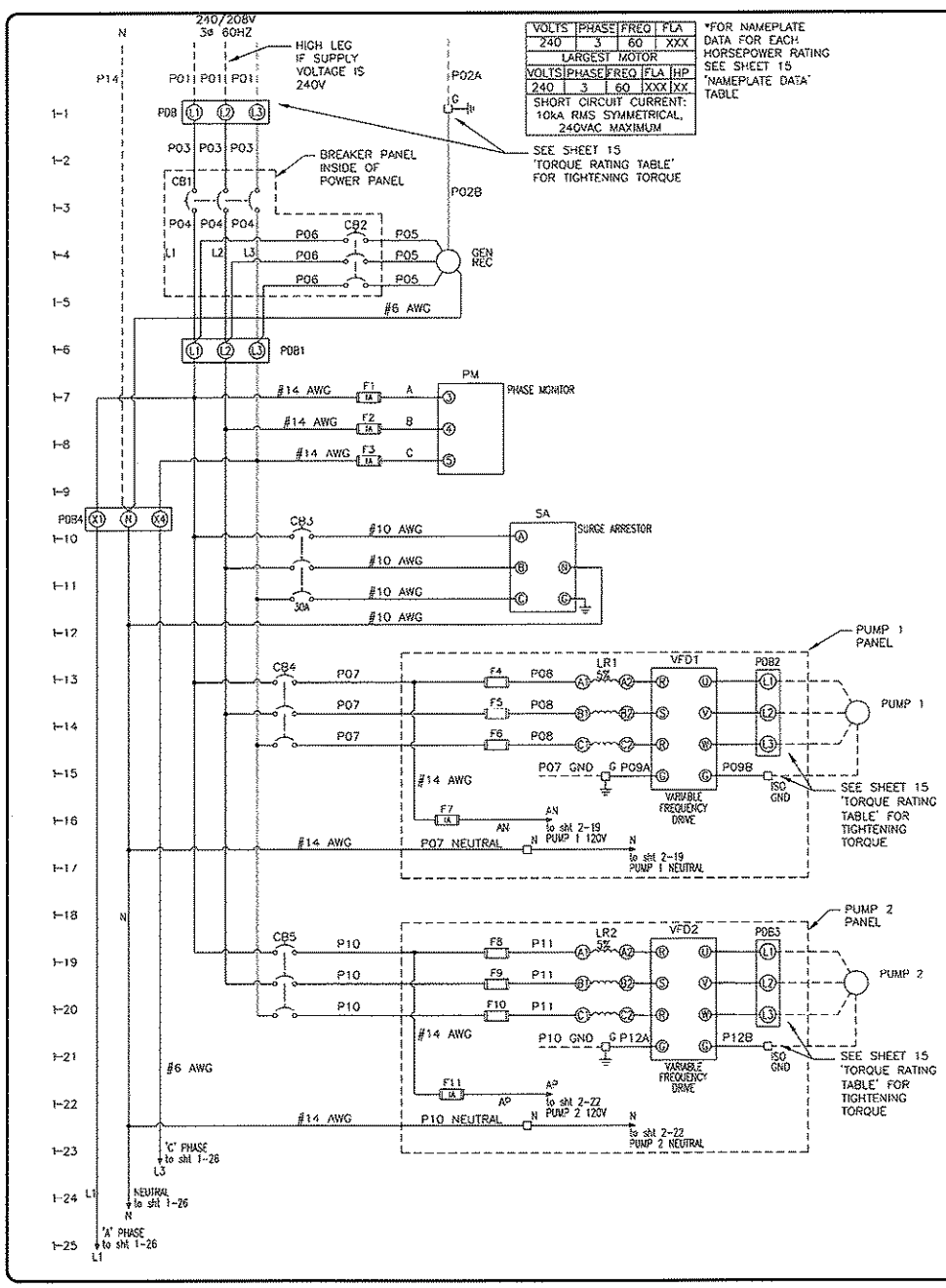

VOLTS	PHASE	FREQ	FLA
240	3	60	XXX
LARGEST MOTOR			
VOLTS	PHASE	FREQ	FLA	HP
240	3	60	XXX	XX
SHORT CIRCUIT CURRENT: 10kA RMS SYMMETRICAL, 240VAC MAXIMUM				

*FOR NAMEPLATE DATA FOR EACH HORSEPOWER RATING SEE SHEET 15 'NAMEPLATE DATA' TABLE

ALL WORK SHALL BE CONSTRUCTED IN ACCORDANCE WITH THE LATEST EDITION OF THE E.C.U.A. STANDARD SPECIFICATIONS

NOTES:

1. THE COMPLETED CONTROL PANEL SHALL BE LABELED AND MANUFACTURED TO MEET U.L. 508A AND 698A CERTIFICATION.
2. CONTROL PANEL WIRING SHALL BE STRANDED COPPER, MINIMUM SIZE #16 AWG WITH 600V 90DEGREE C TYPE THHN INSULATION.
3. CONTROL PANEL WIRING SHALL BE NUMBERED AT BOTH ENDS WITH TYPE WRITTEN, HEAT SHRINKABLE WIRE MARKERS.
4. ALL WIRING WITHIN THE CONTROL PANEL SHALL BE COLOR CODED OR CODED USING ELECTRICAL TAPE IN SIZES WHERE COLORED INSULATION IS NOT AVAILABLE. THE FOLLOWING CODING SHALL BE USED:
   - 4.1. UNGROUNDED AC CONDUCTORS AT SUPPLY VOLTAGE – BLACK
   - 4.2. GROUNDED AC CURRENT CARRYING CONDUCTORS – WHITE
   - 4.3. UNGROUNDED AC CONDUCTORS BELOW SUPPLY VOLTAGE – RED
   - 4.4. UNGROUNDED AC CONTROL CONDUCTORS & CONDUCTORS THAT REMAIN ENERGIZED WHEN THE MAIN DISCONNECT IS OFF – YELLOW
   - 4.5. UNGROUNDED DC CONTROL CONDUCTORS – ORANGE
   - 4.6. GROUNDED DC CURRENT CARRYING CONDUCTORS – BROWN
   - 4.7. INTRINSICALLY SAFE WIRING – BLUE
   - 4.8. GROUND CONDUCTORS – GREEN
5. SEE SHEETS 11 & 12 FOR DETAILS REGARDING ALL POWER CONDUCTORS LABELED PXX.
6. SEE SHEET 11 'HORSEPOWER RELATED COMPONENTS EQUIPMENT LIST' FOR RATINGS OF OVERCURRENT PROTECTION DEVICES.

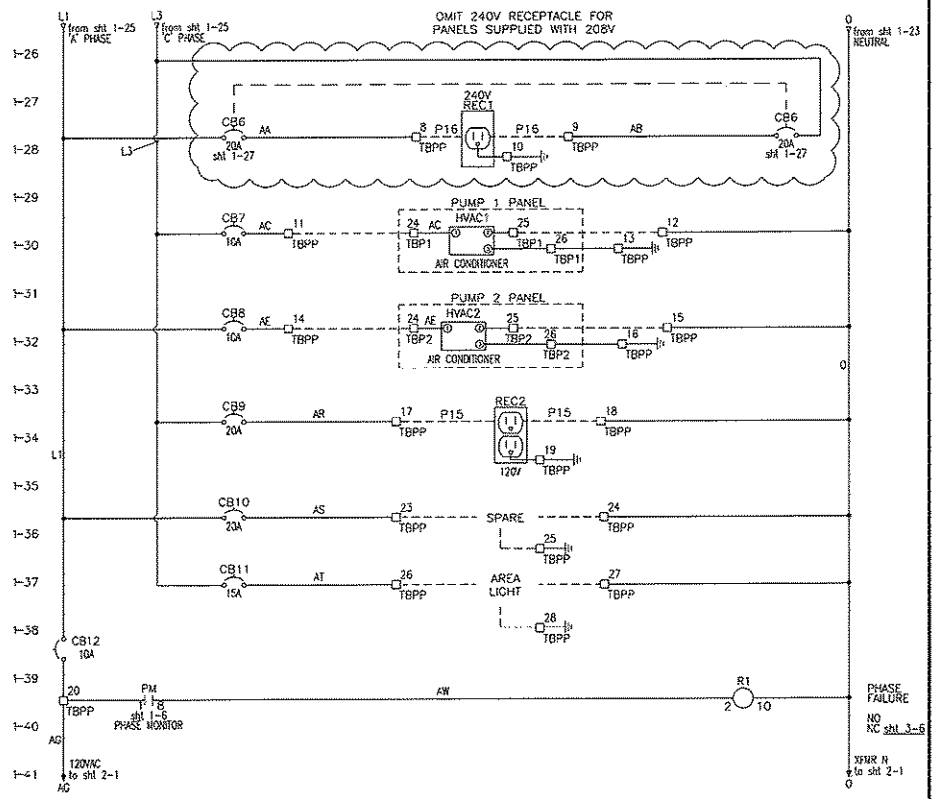

REVISIONS	BY

IMPROVEMENTS TO WASTEWATER COLLECTION SYSTEM

LIFT STATION CONSTRUCTION DETAILS

ELECTRICAL STANDARDS

FINAL SUBMITTAL

EMERALD COAST UTILITIES AUTHORITY

APPROVED BY:

Drawn:
Designed:
Checked:
Date: MAY '13
Scale:
Project No:
Sheet No. 1
OF 18 Sheets

ALL WORK SHALL BE CONSTRUCTED IN ACCORDANCE WITH THE LATEST EDITION OF THE E.C.U.A. STANDARD SPECIFICATIONS

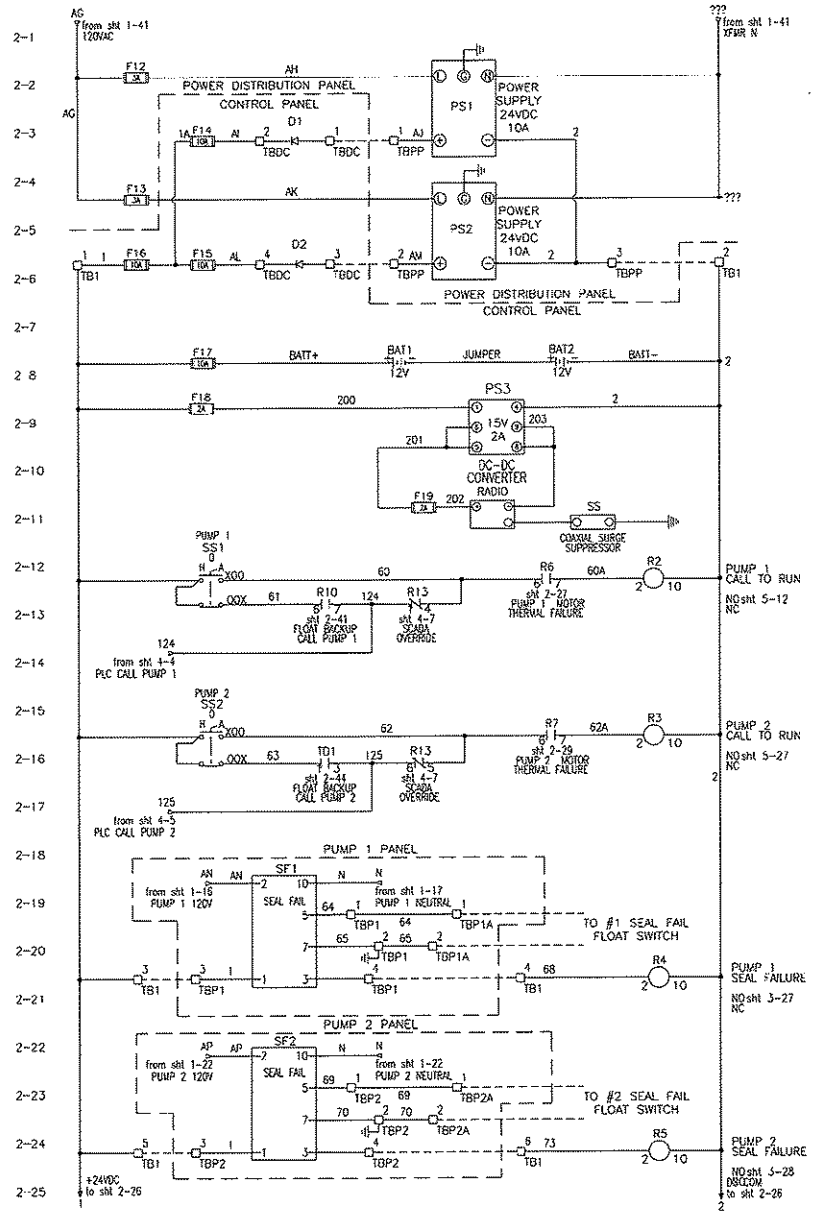

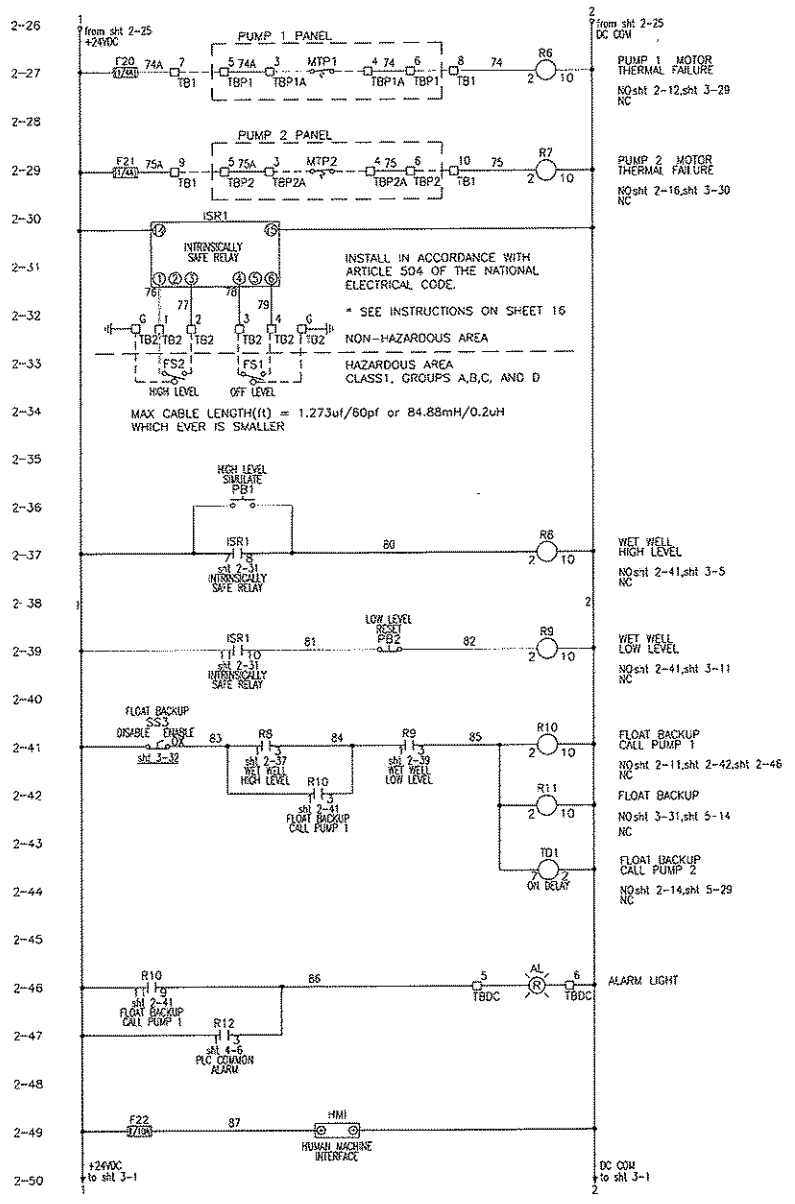

REVISIONS	BY

IMPROVEMENTS TO WASTEWATER COLLECTION SYSTEM

LIFT STATION CONSTRUCTION DETAILS

ELECTRICAL STANDARDS

FINAL SUBMITTAL

EMERALD COAST UTILITIES AUTHORITY

APPROVED BY:

Drawn:	
Designed:	
Checked:	
Date:	MAY '13
Scale:	
Project No:	
Sheet No.	2
	Of 18 Sheets

ALL WORK SHALL BE CONSTRUCTED IN ACCORDANCE WITH THE LATEST EDITION OF THE E.C.U.A. STANDARD SPECIFICATIONS

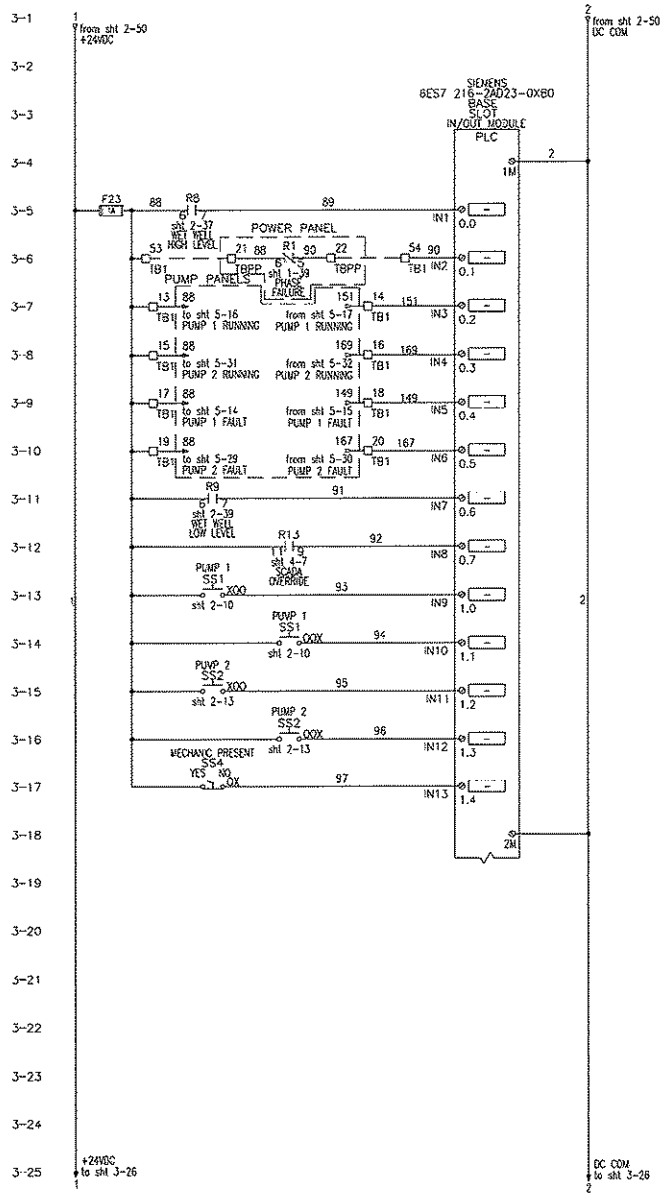

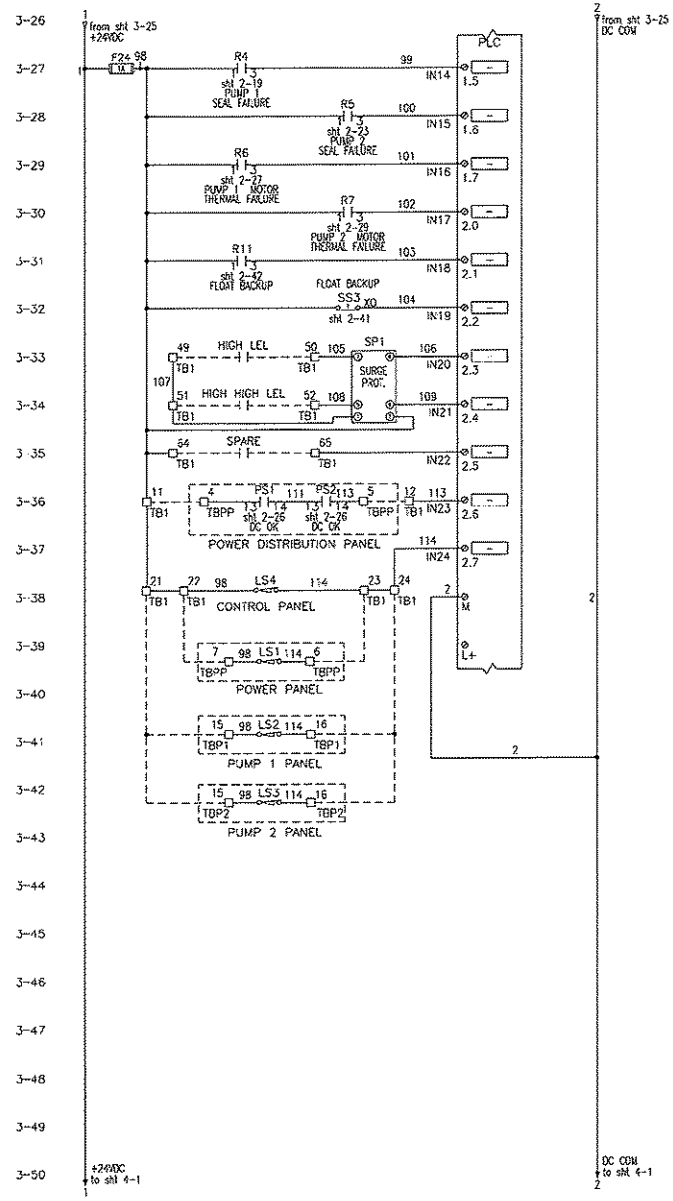

REVISIONS	BY

IMPROVEMENTS TO WASTEWATER COLLECTION SYSTEM

LIFT STATION CONSTRUCTION DETAILS

ELECTRICAL STANDARDS

FINAL SUBMITTAL

EMERALD COAST UTILITIES AUTHORITY

APPROVED BY:

Drawn:	
Designed:	
Checked:	
Date:	MAY '13
Scale:	
Project No:	
Sheet No.	3
	Of 18 Sheets

ALL WORK SHALL BE CONSTRUCTED IN ACCORDANCE WITH THE LATEST EDITION OF THE E.C.U.A. STANDARD SPECIFICATIONS

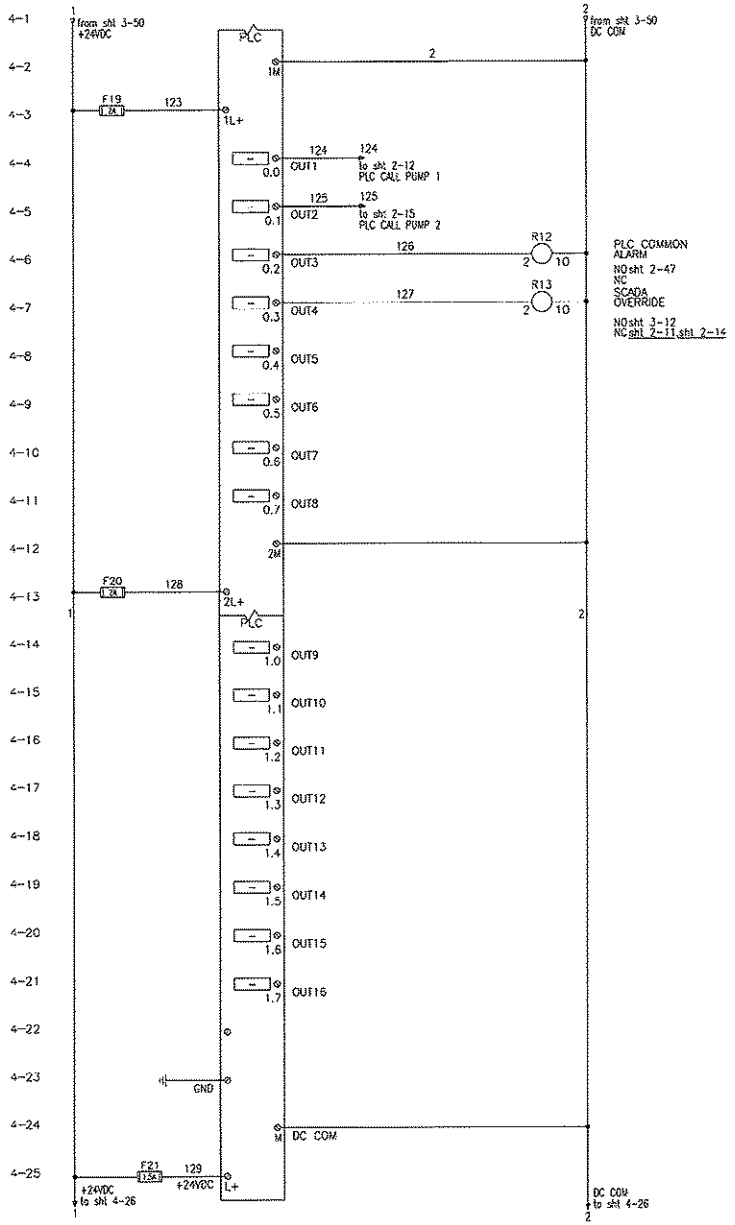

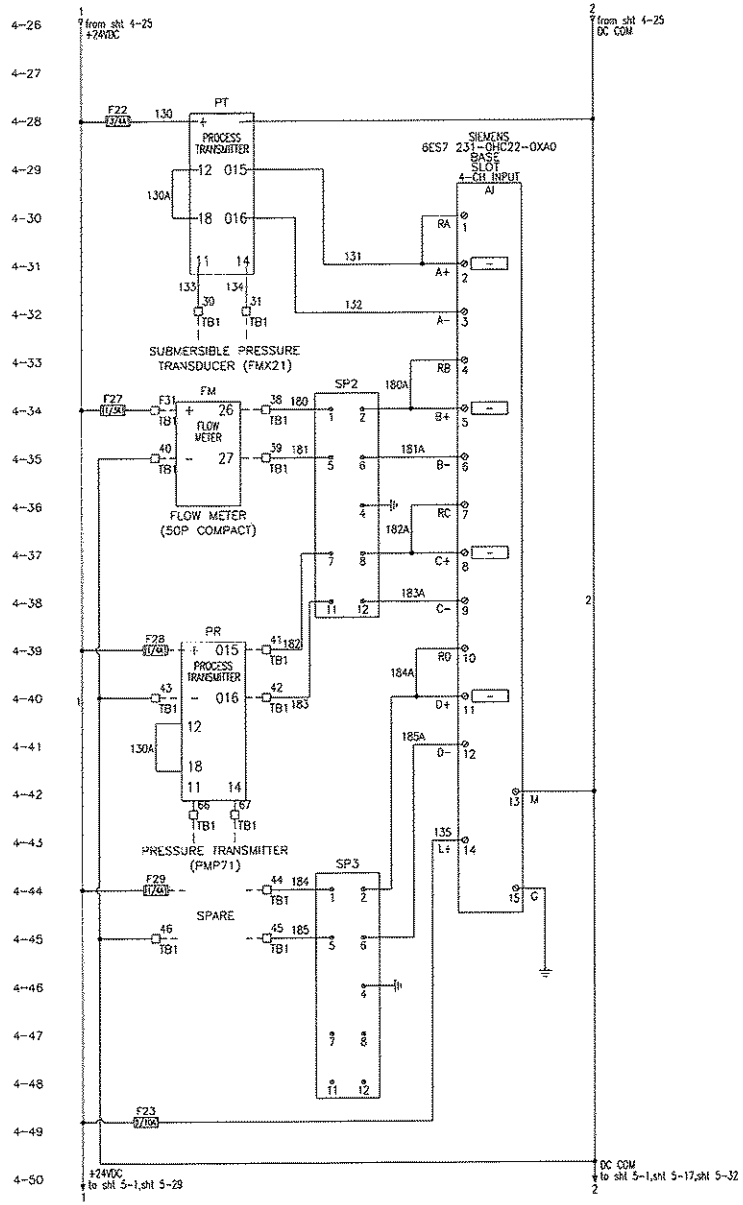

REVISIONS	BY

IMPROVEMENTS TO WASTEWATER COLLECTION SYSTEM

LIFT STATION CONSTRUCTION DETAILS

ELECTRICAL STANDARDS

FINAL SUBMITTAL

EMERALD COAST UTILITIES AUTHORITY

APPROVED BY:

Drawn:	
Designed:	
Checked:	
Date:	MAY '13
Scale:	
Project No:	
Sheet No.	4
	Of 18 Sheets

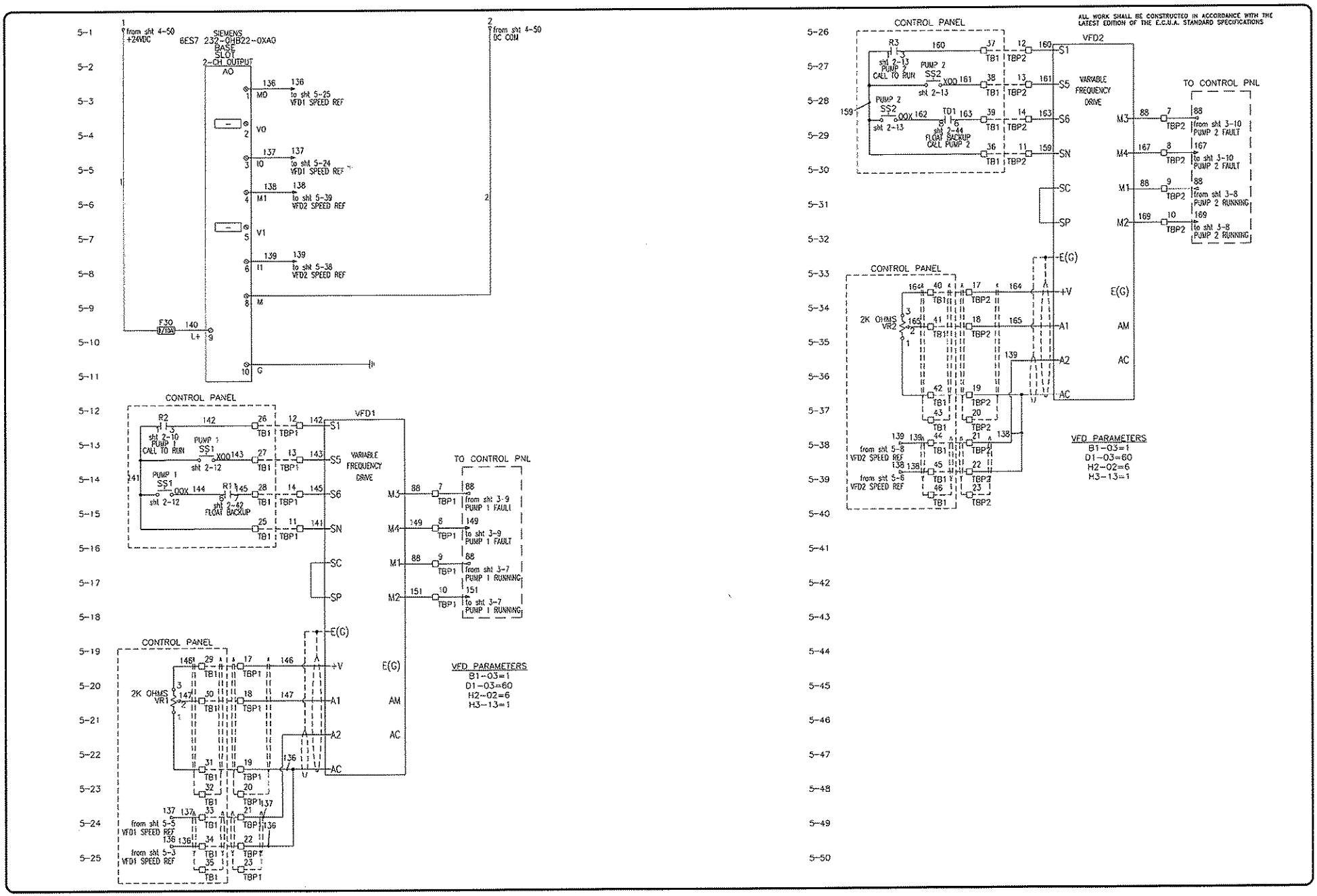

REVISIONS	BY

IMPROVEMENTS TO WASTEWATER COLLECTION SYSTEM

LIFT STATION CONSTRUCTION DETAILS

ELECTRICAL STANDARDS

FINAL SUBMITTAL

EMERALD COAST UTILITIES AUTHORITY

APPROVED BY:

Drawn:
Designed:
Checked:
Date: MAY '13
Scale:
Project No:
Sheet No. 5
OF 18 Sheets

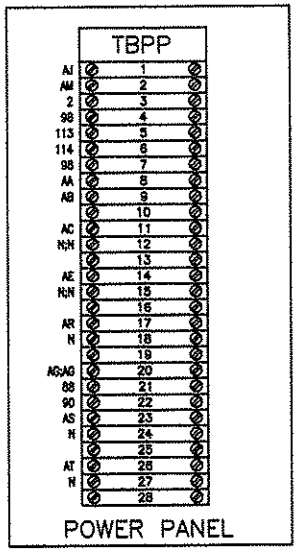

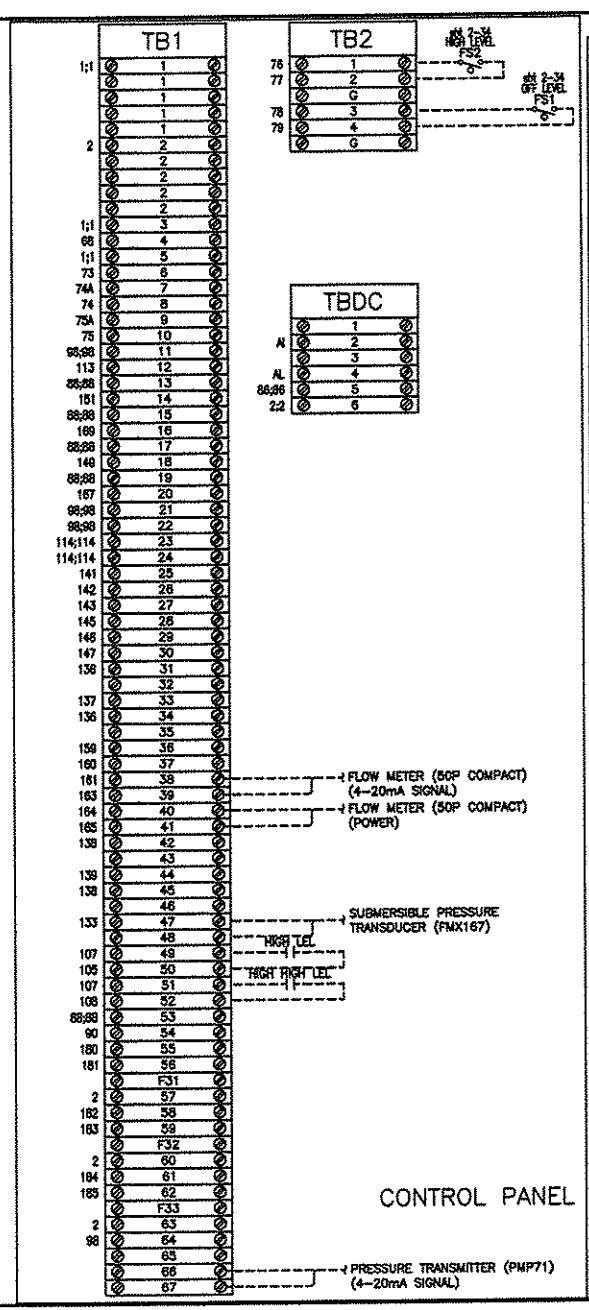

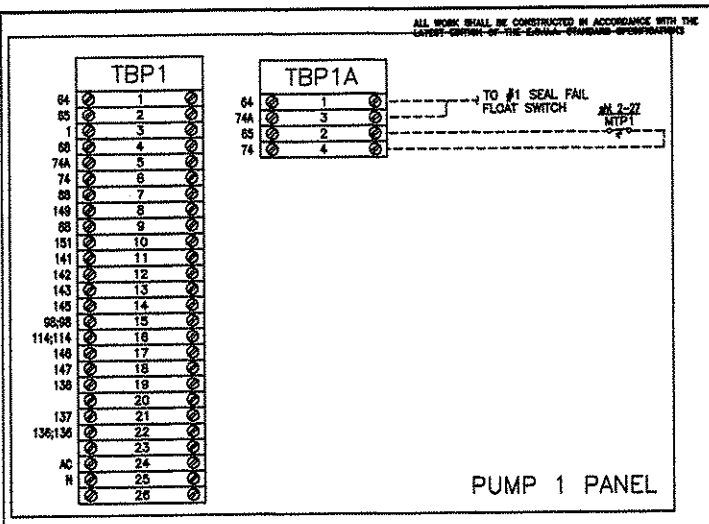

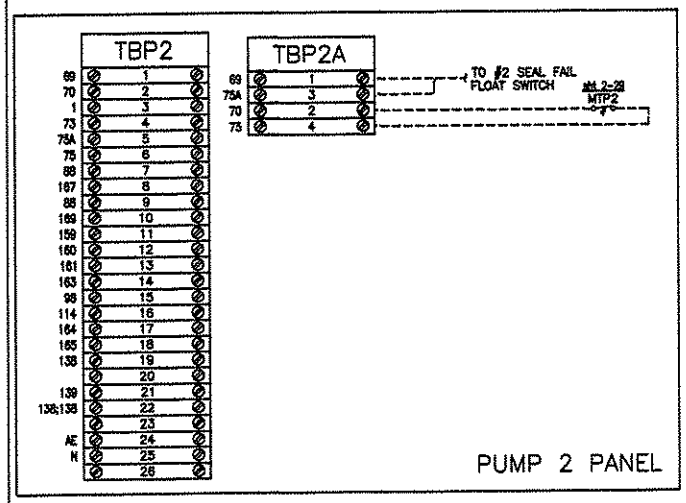

NOTES:

TERMINAL BLOCK DESIGNATIONS:

- TBPP – POWER PANEL TERMINAL BLOCK
- TB1 – CONTROL PANEL TERMINAL BLOCK
- TB2 – INTRINSICALLY SAFE TERMINAL BLOCK
- TBP1 – PUMP 1 TERMINAL BLOCK
- TBP1A – PUMP 1 TERMINAL BLOCK (MOTOR THERMAL AND SEAL FAILURE)
- TBP2 – PUMP 2 TERMINAL BLOCK
- TBP2A – PUMP 2 TERMINAL BLOCK (MOTOR THERMAL AND SEAL FAILURE)

TYPICAL FOR ALL TERMINAL BLOCKS ON THIS DRAWING

USE COPPER CONDUCTORS ONLY
75 DEG C (167 DEG F)
5.3–7.0 LB/IN TIGHTENING TORQUE

REVISIONS	BY

IMPROVEMENTS TO WASTEWATER COLLECTION SYSTEM

LIFT STATION CONSTRUCTION DETAILS

ELECTRICAL STANDARDS

FINAL SUBMITTAL

EMERALD COAST UTILITIES AUTHORITY

APPROVED BY:

Drawn	
Designed	
Checked	
Date	MAY '13
Scale	
Project No	
Sheet No.	6
Of 15 Sheets	

ALL WORK SHALL BE CONSTRUCTED IN ACCORDANCE WITH THE LATEST EDITION OF THE E.C.U.A. STANDARD SPECIFICATIONS

NOTES

1. SEE SHEET 15 FOR SCHEDULES, LEGENDS AND PANEL TAGS.

ATTENTION

THIS LAYOUT IS ONE OF TWO (2) POSSIBLE CHOICES – SEE SHEET 7 FOR THE OTHER OPTION. IF THIS LAYOUT OPTION IS SELECTED, SEE SHEET 14A FOR ASSOCIATED RACK DETAILS.

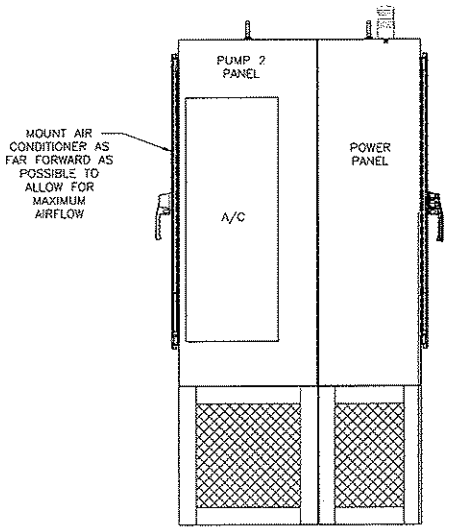

LEFT SIDE

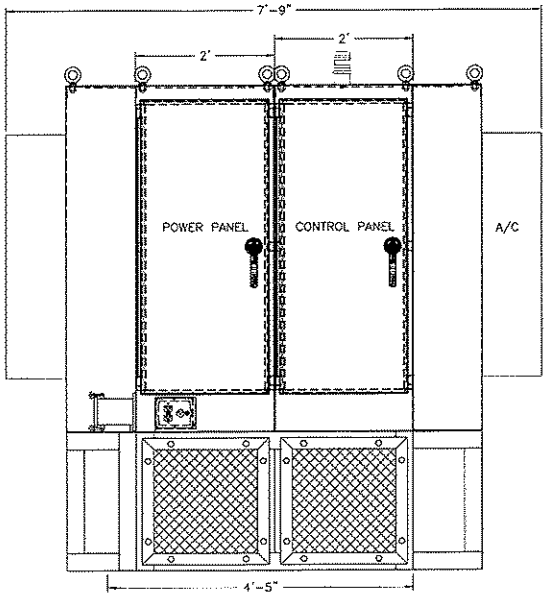

FRONT

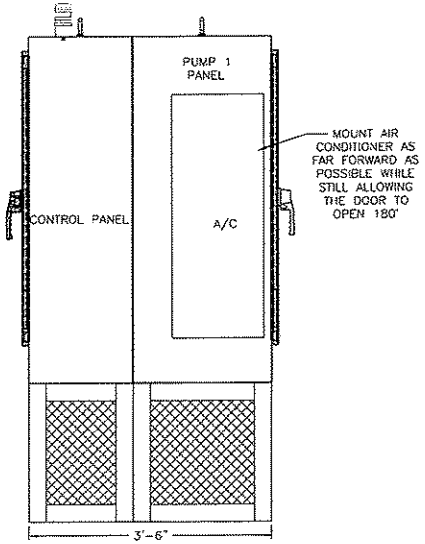

RIGHT SIDE

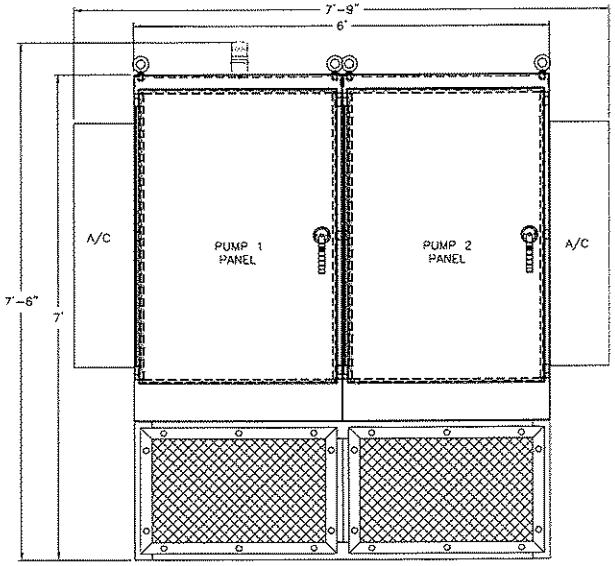

BACK

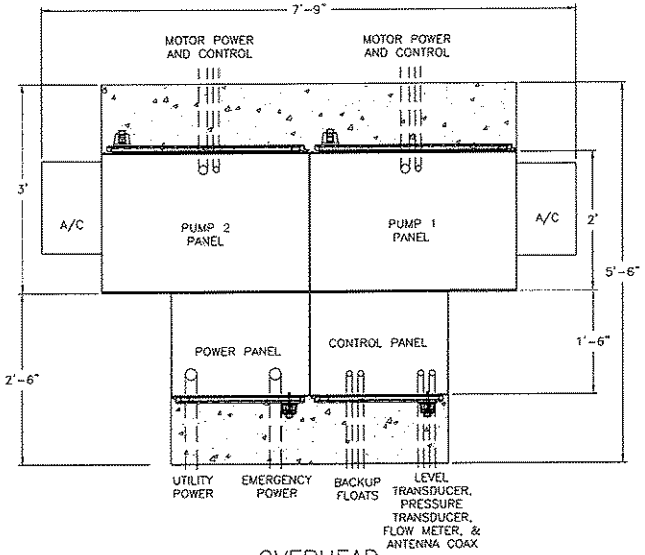

OVERHEAD

REVISIONS	BY

IMPROVEMENTS TO WASTEWATER COLLECTION SYSTEM

LIFT STATION CONSTRUCTION DETAILS

ELECTRICAL STANDARDS

FINAL SUBMITTAL

EMERALD COAST UTILITIES AUTHORITY

APPROVED BY:

Drawn:	
Designed:	
Checked:	
Date:	MAY '13
Scale:	
Project No:	
Sheet No.	7A
OF 18 Sheets	

ALL WORK SHALL BE CONSTRUCTED IN ACCORDANCE WITH THE LATEST EDITION OF THE E.C.U.A. STANDARD SPECIFICATIONS

NOTES

1. SEE SHEET 15 FOR SCHEDULES, LEGENDS AND PANEL TAGS.
2. LAYOUT OF THE POWER & VFD SECTIONS DEPICTS THE LARGEST POSSIBLE HORSEPOWER CONFIGURATION.

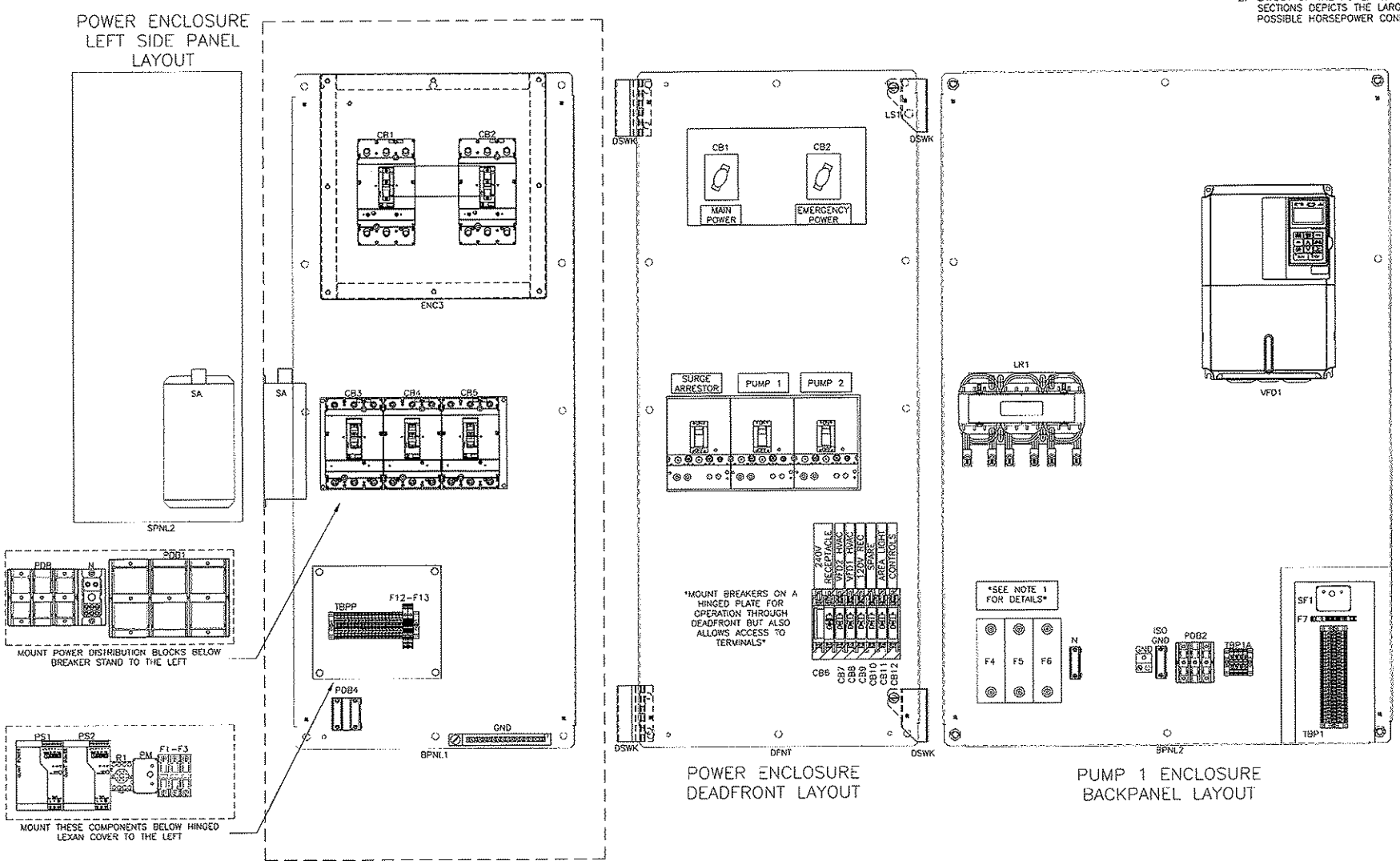

REVISIONS	BY

IMPROVEMENTS TO WASTEWATER COLLECTION SYSTEM

LIFT STATION CONSTRUCTION DETAILS

ELECTRICAL STANDARDS

FINAL SUBMITTAL

EMERALD COAST UTILITIES AUTHORITY

APPROVED BY:

Drawn:
Designed:
Checked:
Date: MAY '13
Scale:
Project No:
Sheet No. 8
Of 18 Sheets

ALL WORK SHALL BE CONSTRUCTED IN ACCORDANCE WITH THE LATEST EDITION OF THE E.C.U.A. STANDARD SPECIFICATIONS

NOTES

1. SEE SHEET 15 FOR SCHEDULES, LEGENDS AND PANEL TAGS.
2. LAYOUT OF THE VFD SECTION DEPICTS THE LARGEST POSSIBLE HORSEPOWER CONFIGURATION.

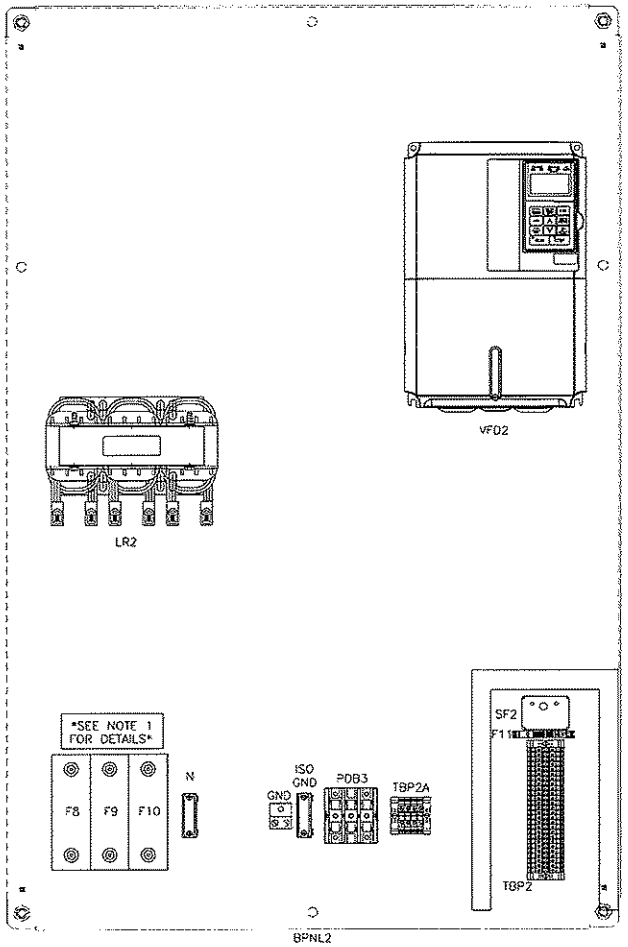

PUMP 2 ENCLOSURE BACKPANEL LAYOUT

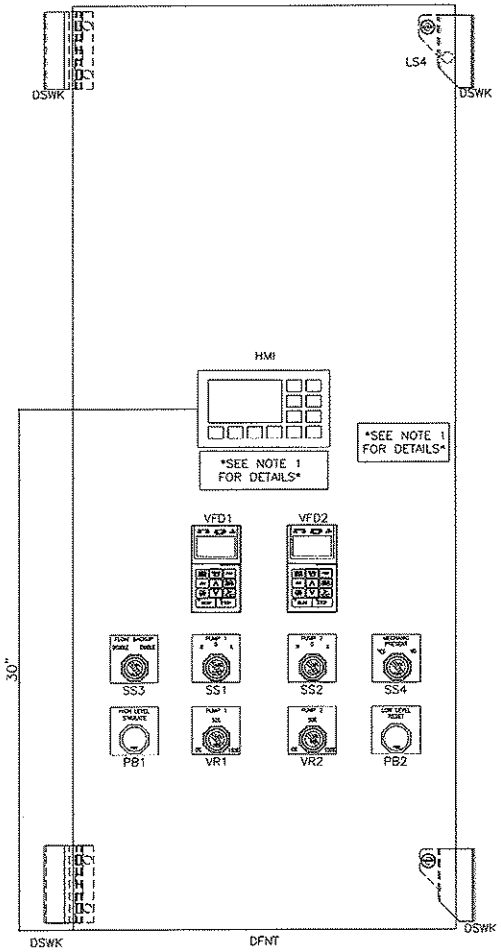

CONTROL PANEL DEADFRONT LAYOUT

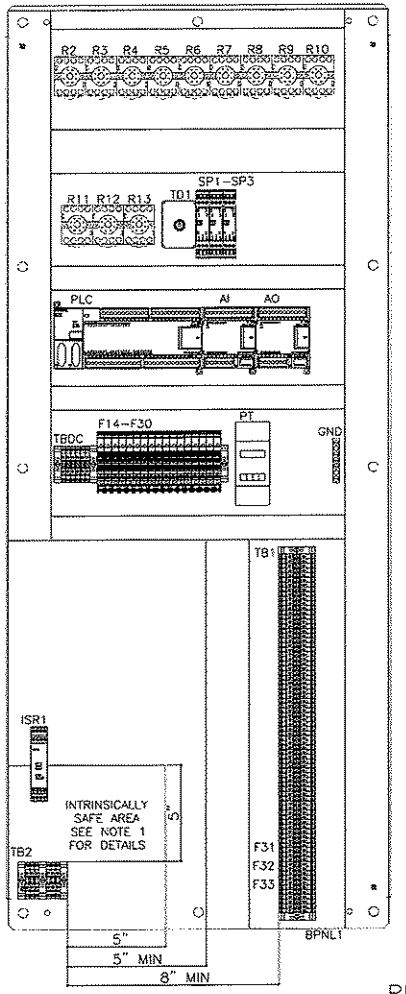

CONTROL ENCLOSURE BACKPANEL LAYOUT

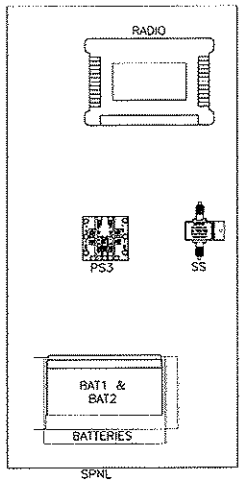

CONTROL ENCLOSURE RIGHT SIDEPANEL LAYOUT

REVISIONS	BY

IMPROVEMENTS TO WASTEWATER COLLECTION SYSTEM

LIFT STATION CONSTRUCTION DETAILS

ELECTRICAL STANDARDS

FINAL SUBMITTAL

EMERALD COAST UTILITIES AUTHORITY

APPROVED BY:

Drawn:	
Designed:	
Checked:	
Date:	MAY '13
Scale:	
Project No:	
Sheet No.	9
	Of 18 Sheets

240-208V VFD Equipment List

Item	Tag	Panel	Description	Manufacturer	Model	Qty
1	ENC1	Power & Control	60X24X18 NEMA 4X SS Enclosure	Hoffman	A6024188SFSN4	2
2	BPNL1	Power & Control	60x24 Painted Steel Backpanel	Hoffman	A60P24F1	2
3	ENC2	Pump 1 & 2	60X36X24 NEMA 4X SS Enclosure	Hoffman	A6036245SFSN4	2
4	BPNL2	Pump 1 & 2	60x36 Painted Steel Backpanel	Hoffman	A60P36F1	2
5	SPNL	Control	28"H x 12"W Aluminum Sidepanel	EWS	Custom	1
6	DFNT	Power & Control	60x24 Aluminum Deadfront Panel	EWS	Custom	2
7	DSWK	Power & Control	Door Swing Kit	Hoffman	ANADFK	2
8	FRM	All	Expanded Metal Stainless Steel Frame 120x24x24	EWS	SEE DRAWINGS	1
9	PDB	Power	Incoming Power Distribution Block PDB	Square D	SEE HP TABLE SHEET 11	1
10	PDB	Power	Incoming Power Distribution Block PDB Cover	Square D	SEE HP TABLE SHEET 11	1
11	GND	Power	Power Panel Ground Bar	Square D	PK1SGTA-L	1
12	ENC3	Power	16"H x 16"W x 8"D Screw Cover Type 3R Enclosure	Hoffman	A16168GSC	1
13	CB1	Power	600V Main Circuit Breaker	Square D	SEE HP TABLE	1
14	CB2	Power	600V Emergency Circuit Breaker	Square D	SEE HP TABLE	1
15	CB1,CB2	Power	Mechanical Interlock for H/J Frame Circuit Breakers	Square D	S29369	1
16	CB1,CB2	Power	Door Mounted Rotary Handle for H/J Frame Circuit Breakers	Square D	S29338	2
17	GEN REC	Power	NEMA 4X Generator Receptacle	Appleton	SEE HP TABLE SHEET 11	1
18	GEN REC	Power	NEMA 4X Generator Plug (Ship Loose)	Appleton	SEE HP TABLE SHEET 11	1
19	PDB1	Power	Main Power Distribution Block PDB1	Square D	SEE HP TABLE SHEET 11	1
20	PDB1	Power	Main Power Distribution Block PDB1 Cover	Square D	SEE HP TABLE SHEET 11	1
21	F1-F3	Power	3 Pole Rejection type Fuse Block	Bussmann	BC6033PQ	1
22	F1-F3	Power	1A Rejection Type Fuse, Class CC	Bussmann	KTK-R-1	3
23	F1-F3	Power	Fuse Cover	Bussmann	SAMI-7N	3
24	PM	Power	240V Phase Monitor	Timemark	257B	1
25	PM	Power	600V, 8-Pin Relay Base	ABB	OT08PC	1
26	CB3-CB5	Power	Breaker Stand	EWS	Custom	1
27	CB3	Power	30A 600V 3 Pole Circuit Breaker, Main Surge Arrestor	Square D	HDL36030	1
28	SA	Power	Main Surge Arrestor	SSI	SEE HP TABLE SHEET 11	1
29	CB4, CB5	Power	600V 3 Pole Circuit Breaker, VFD	Square D	SEE HP TABLE SHEET 11	2
30	CB4, CB5	Power	H & J Frame Circuit Breaker Locking System	Square D	S29371	2
31	F4-F6, F8-F10	Pump 1 & 2	Semiconductor Fuse	Ferraz Shawmut	SEE HP TABLE SHEET 11	6
32	F4-F6, F8-F10	Pump 1 & 2	Semiconductor Fuse Block	Ferraz Shawmut	SEE HP TABLE SHEET 11	6
33	LR1, LR2	Pump 1 & 2	5% Line Reactor	MTE	SEE HP TABLE SHEET 11	2
34	VFD1, VFD2	Pump 1 & 2	Variable Frequency Drive	Yaskawa	SEE HP TABLE SHEET 11	2
35	VFD1, VFD2	Control	Remote Operator Kit for Yaskawa P7 VFD	Yaskawa	UUX000444	2
36	GND	Pump 1 & 2	Panel to Panel Ground Lug	NSI	2-GT	2
37	PDB2, PDB3	Pump 1 & 2	Motor Power Distribution Block PDB2&3, (1)#14-2/0.....(1)#14-2/0	Square D	9080LBA362101	2
38	PDB2, PDB3	Pump 1 & 2	Motor Power Distribution Block PDB2&3 Cover	Square D	9080LB23	2
39	CB6-CB11	Power	Hinged Aluminum Bracked for Mounting 240/120V Circuit Breakers through Deadfront	EWS	Custom	1
40	PDB4	Power	240V/120V Power Distribution Block, (1) #14-2 ... (4) #18-10	Square D	9080LBA361104	1
41	CB6	Power	20A, 240V, 2 Pole Circuit Breaker *Omit for 208V Supply Panels	Square D	QOU220	1
42	REC1	Power	20A, 250V, 6-20R Receptacle *Omit for 208V Supply Panels	P&S	5872I	1
43	HVAC1, HVAC2	Pump 1 & 2	120V NEMA 4X Air Conditioner	Iceqube	SEE HP TABLE SHEET 11	2
44	CB10	Power	20A, 120V 1 Pole Circuit Breaker	Square D	QOU120	2
45	REC2	Power	120V 20A GFCI Duplex Receptacle NEMA5-20R	P&S	2094-I	1
46	REC1, REC2	Power	Custom Receptacle Cover NEMA 4X S.S.	HOFFMAN	HIDRPSS-MOD	1
47	REC1, REC2	Power	3/4 1G AL FD BOX	Appelton	4CS-1/2	2
48	CB7, CB8, CB12	Power	10A, 120V, 1 Pole Circuit Breaker	Square D	QOU110	3
49	CB11	Power	15A, 120V, 1 Pole Circuit Breaker	Square D	QOU115	1
50	R1	Power	120V 3PDT General Purpose Relay w/ Indicator Lamp	Potter Brumfield	KRPA-14AN-120	1
51	R1-R13, SF1, SF2	All	11 Pin Relay Base	ABB	NO5-11	15
52	F7, F11-F13	Pump 1, 2 & Power	Fused Terminal Block w/ 120V Blown Fuse Indication	Allen Bradley	1492-H4	4
53	-	Power & Control	1492-H4 &H5 Fused Terminal Block End Cover	Allen Bradley	1492-N37	4
54	F12, F13	Power	3A Fuse, Power Supply Primary	Bussmann	AGC-3	2
55	PS1, PS2	Power	10A 24VDC Power Supply	Phoenix Contact	2938604	2
56	D1, D2	Power	10A Diode, P1000A	Newark	51R7094	2
57	-	Power	Custom Stand/Lexan Hinged Cover w/Alum Stand for TBPP & Power Supply Fuses	EWS	Custom	1
58	F14-F30	Control	Fused Terminal Block w/ 24VDC Blown Fuse Indication	Allen Bradley	1492-H5	17
59	F14 - F17	Control	10A Fuse, Power Supply Secondary & Batteries	Bussmann	AGC-10	4
60	BAT1, BAT2	Control	12VDC Battery	Power Sonic	PS1290	2
61	PS3	Control	24VDC-15VDC Converter, 2A	Vicor	V1-J12-EY-B1	1
62	N	Power	Incoming Neutral Block	Square D	9080LBA163206	1
63	N	Power	Incoming Neutral Block, Cover	Square D	9080LB31	1

240-208V VFD Equipment List

ALL WORK SHALL BE CONSTRUCTED IN ACCORDANCE WITH THE LATEST EDITION OF THE F.D.O.A. STANDARD SPECIFICATIONS

Item	Tag	Panel	Description	Manufacturer	Model	Qty
64	RADIO	Control	400MHz Radio	GE MDS	SD04MD	1
65	RADIO	Control	DB9 Male/Male Gender Changer	Office Depot	946660	1
66	RADIO/SS	Control	3 Foot LMR400UF Coaxial Jumper NMale to TNCMale	Tessco	324503	1
67	SS	Control	Coaxial Surge Suppressor, 50-700MHz	Polyphaser	IS-50NX-C1	1
68	-	-	50FT Coaxial Cable, NMale-Nmale, Wireless Solutions 400-07-07-P50 (Ship Loose)	Tessco	370875	1
69	-	-	400MHz Yagi Antenna w/ N Female Connector, MAXRAD MYA4506N (Ship Loose)	Tessci	37634	1
70	-	-	Antenna Tower 5' Base Section, ROHN R-5B25G5 (Ship Loose)	Tessco	64559	1
71	-	-	Antenna Tower 10' Mid Section, ROHN R-25G (Ship Loose)	Tessco	56866	1
72	-	-	Antenna Tower 9' Top Section, ROHN R-25AG2 (Ship Loose)	Tessco	29080	1
73	-	-	21' 1-1/4" S.S. Antenna Mast (Ship Loose)	Bell Steel	023008	1
74	F20, F21	Control	1/4A Fuse, Motor Thermal Inputs	Bussmann	AGC-1/4	2
75	F18, F19, F25, F26	Control	2A Fuse, Radio Power Supply, Radio & Digital Outputs	Bussmann	AGC-2	4
76	SS1, SS2	Control	3 Position Selector Switch, 30MM	Square D	9001SK45BH2	2
77	R2-R13	Control	24VDC 3PDT General Purpose Relay w/ Indicator Lamp	Potter Brumfield	KRPA-14DN-24	12
78	SF1, SF2	Control	120V Seal Failure Relay	ATC	SPM-120-AAA-10K	2
79	ISR1	Control	Intrinsically Safe Barrier Relay, 24VDC	Pepperl & Fuchs	KFD2-SR2-Ex2.W	1
80	TB2	Control	Terminal Block, Blue TB2	Phoenix Contact	3044115	4
81	TB2	Control	Terminal Block, Blue End Barrier, TB2	Phoenix Contact	3047235	1
82	TB2	Control	Ground Terminal Blocks, TB2	Phoenix Contact	3044128	2
83	PB1, PB2	Control	Push Button, Black 1NO 1NC	Square D	9001SKR1BH13	2
84	SS3, SS4	Control	2 Position Selector Switch, 30MM	Square D	9001SKS11BH2	2
85	TD1	Control	24VDC 0-180 Second Time Delay Relay	Square D	RE48ATM12MW	1
86	TD1	Control	8 Pin Relay Base	ABB	NO5-8	1
87	AL	Control	24VDC Red Alarm Light	Federal Signal	LP3M-012-048R	1
88	F22, F29, F30	Control	1/10A Fuse, Analog Inputs, Analog Outputs & HMI	Bussmann	AGC-1/10	3
89	HMI	Control	TD400C Text Display	Siemens	6AV6 640-0AA00-0AX1	1
90	F23, F24	Control	1A Fuse, Digital Inputs	Bussmann	AGC-1	4
91	PLC	Control	S7-200 Dual Com Port Processor w/ 24 DI & 16 DO Points	Siemens	6ES7 216-2AD23-0XB0	1
92	AI	Control	S7-200 4 Point AI Module	Siemens	6ES7 231-0HC22-0XA0	1
93	AO	Control	S7-200 2 Point AO Module	Siemens	6ES7 232-0HB22-0XA0	1
94	PLC	Control	S7-200 Communication cable PC/PPI RS-232/485	Siemens	6ES7 901-3CB30-0XA0	1
95	SP1-SP3	Control	Plug In DI Surge Suppression, PT 4x1...DC	Phoenix Contact	2838322	3
96	SP1-SP3	Control	Terminal Block Base for Plugable Surge Supression, PT 4x1-BE	Phoenix Contact	2839363	3
97	LS1-LS4	Control	Panel Intrusion Switches, N.C. Contacts	NSI	7603DPS	4
98	F27	Control	1-1/2A Fuse, PLC Supply	Bussmann	AGC-1-1/2	1
99	F28	Control	3/4A Fuse, Process Analyzer	Bussmann	AGC-3/4	1
100	PT	Control	Process Transmitter	Endress & Hauser	RMA42AAAH2	2
101	PT	-	Submersible Level Transducer, 20ft Range w/ 60ft Cable & Mounting Clamp (Ship Loose)	Endress & Hauser	FMX21-FE221GGE21APO	1
102	F31-F33	Control	24VDC Fused Terminal Block With Indication	Phoenix Contact	3046090	3
103	F31-F33	Control	1/4A Fuse, Analog Inputs	Bussmann	GMA-250	3
104	VR1, VR2	Control	2K Ohm Potentimeter	Square D	9001SX2139	2
105	TBPP,1,DC,P1, 1A,P2 & 2A	All	Terminal Block, Gray 26-10 AWG Wire	Phoenix Contact	3044102	161
106	TBPP,1,DC,P1, 1A,P2 & 2A	All	Terminal Block End Barrier	Phoenix Contact	3047028	8
107	TBPP,1,DC,P1, 1A,P2 & 2A	All	Terminal Block End Anchor	Phoenix Contact	0800886	17
108	TBP1A, TBP2A	Pump 1 & 2	Terminal Block, Gray 26-8 AWG Wire, TBVFD1A & TBVFD2A	Phoenix Contact	3044131	8
109	GND	Control	Control Panel Ground Bar	Square D	PKSGTA	1
110	VFD1, VFD2	Pump 1, 2 & Control	RJ45 Connector for non-sheilded CAT 6 Cable	Tessco	355847	4
111	-	-	Meter Socket (SHIP LOOSE)	Milbank	SEE HP TABLE SHEET 11	1
112	-	-	Stainless Steel 60' Float (SHIP LOOSE)	Anchor Scientific	P60NO-SST	2
113	-	-	Insulated Ground Neutral (SHIP LOOSE)	Square D	SN400LA	1
114	-	-	Ground Bar Kit (SHIP LOOSE)	Square D	PKDGTJ250	1
115	-	-	NEMA 4A S.S. Disconnect (SHIP LOOSE)	Square D	J250DS	1
116	-	-	Antenna Mast Stabilization Plate (Ship Loose)	EWS	Custom	1
117	-	-	Stainless Steel 'U' Bolt, 2" Pole, 5/16" Diameter Bolt w/ 2-1/2" Threads (SHIP LOOSE)			1
118	-	-	5/16" Stainless Steel Flat Washer for 'U' Bolt (SHIP LOOSE)			2
119	-	-	5/16" Stainless Steel Lock Washer for 'U' Bolt (SHIP LOOSE)			2
120	-	-	5/16" Stainless Steel Nut for 'U' Bolt (SHIP LOOSE)			2
121	-	-	Stainless Steel 'U' Bolt, 1/4" Diameter (SHIP LOOSE)			2
122	-	-	1/4" Stainless Steel 1/4" Nut for 'U' Bolt (SHIP LOOSE)			4
123	-	-	1-1/4" Reduction Bushing for Antenna Tower, ROHN R-TB50 (SHIP LOOSE)	Tessco	26882	1
124	PLC	Control	S7-200 Memory Module	Siemens	6ES7 2918GF230AX0	1
125	ISO GND	Pump 1 & 2	Motor Isolated Ground Lug	Square D	9080LBA161103	2
126	N	Pump 1 & 2	Neutral Block	Square D	9080LBA161104	2
127	SPNL2	Power	32"X12" Aluminum Sidepanel	EWS	Custom	1
128	FM	Control	Flow Meter	Endress & Hauser	50P Compact	1
129	PR	Control	Pressure Transmitter	Endress & Hauser	PMP71-AAC1PG1RAA	1

REVISIONS	BY

IMPROVEMENTS TO WASTEWATER COLLECTION SYSTEM

LIFT STATION CONSTRUCTION DETAILS

ELECTRICAL STANDARDS

FINAL SUBMITTAL

EMERALD COAST UTILITIES AUTHORITY

APPROVED BY:

Drawn:
Designed:
Checked:
Date: MAY '13
Scale:
Project No:
Sheet No. 10
OF 18 Sheets

ALL WORK SHALL BE CONSTRUCTED IN ACCORDANCE WITH THE LATEST EDITION OF THE E.C.U.A. STANDARD SPECIFICATIONS

Horsepower Related Compontents Equipment List

Item	Tag	Horsepower 1	2	3	5	7.5	10	15	20
Incoming Power Distribution Block	PDB	9080LBA362101	9080LBA362101	9080LBA362101	9080LBA362101	9080LBA362101	9080LBA363101	9080LBA363101	9080LBA363101
Incoming Power Distribution Block Cover	PDB	9080LB23	9080LB23	9080LB23	9080LB23	9080LB23	9080LB33	9080LB33	9080LB33
Main Circuit Breaker	CB1	HDL36070	HDL36070	HDL36080	HDL36100	HDL36125	HDL36175	HDL36200	JDL36225
Emergency Circuit Breaker	CB2	HDL36070	HDL36070	HDL36080	HDL36100	HDL36125	HDL36175	HDL36200	JDL36200
Generator Receptacle	GEN REC	ADR1044-RS	ADR1044-RS	ADR1044-RS	ADR1044-RS	AR20044RS	AR20044RS	AR20044RS	AR20044RS
Generator Plug (Ship Loose)	GEN REC	ACP1044CD-RS	ACP1044CD-RS	ACP1044CD-RS	ACP1044CD-RS	AP20044E-RS	AP20044E-RS	AP20044E-RS	AP20044E-RS
Main Power Distribution Block	PDB1	9080LBA363206	9080LBA363206	9080LBA363206	9080LBA363206	9080LBA363206	9080LBA365208	9080LBA365208	9080LBA365208
Main Power Distribution Block Cover	PDB1	9080LB33	9080LB33	9080LB33	9080LB33	9080LB33	9080LB53	9080LB53	9080LB53
Surge Arrestor 208V	SA	SDLA3Y1	SDLA3Y1	SDLA3Y1	SDLA3Y1	SDLA3Y1	SDLA3Y1	SDLA3Y1	SDLA3Y1
Surge Arrestor 240V	SA	SDLA3D1	SDLA3D1	SDLA3D1	SDLA3D1	SDLA3D1	SDLA3D1	SDLA3D1	SDLA3D1
VFD Circuit Breaker	CB4, CB5	HDL36015	HDL36015	HDL36020	HDL36035	HDL36045	HDL36080	HDL36100	HDL36125
VFD Semiconductor Fuse	F4-F6, F10-F12	A70P10-1	A70P15-1	A70P20-1	A70P30-1	A70P50-4	A70P80-4	A70P80-4	A70P125-4
VFD Semiconductor Fuse Block	F4-F6, F10-F12	70316	70316	70316	70316	P243C	P243C	P243C	P266A
5% Line Reactor 208V	LR1, LR2	RL-00802	RL-01202	RL-01802	RL-02502	RL-03502	RL-05502	RL-08002	RL-10002
5% Line Reactor 240V	LR1, LR2	RL-00803	RL-00802	RL-01202	RL-01802	RL-03502	RL-03502	RL-05502	RL-08002
Variable Frequency Drive	VFD1, VFD2	CIMR-P7U20P7	CIMR-P7U21P5	CIMR-P7U22P2	CIMR-P7U23P7	CIMR-P7U25P5	CIMR-P7U27P5	CIMR-P7U2011	CIMR-P7U2015
Top Mount AC *Linear Layout Only*	HVAC1, HVAC2	IQ2000TXS-136	IQ2000TXS-136	IQ2000TXS-136	IQ2000TXS-136	IQ2000TXS-136	IQ2000TXS-136	IQ2500TXS-136	IQ2500TXS-136
Side Mount AC *Back-to-Back Layout Only*	HVAC1, HVAC2	IQ2000VS-136	IQ2000VS-136	IQ2000VS-136	IQ2000VS-136	IQ2000VS-136	IQ2000VS-136	IQ3000VS-136	IQ3000VS-136
Meter Socket	-	UAP9701-RRL	UAP9701-RRL	UAP9701-RRL	UAP9701-RRL	UAP9701-RRL	UAP9701-RRL	UAP3566-X-HSP	UAP3566-X-HSP

Horsepower Related Power Conductors, CGB's and Hubs

Conductor Tag		Horsepower 1	2	3	5	7.5	10	15	20
P-01, P-03 & P-04	Description	(3)#4	(3)#4	(3)#4	(3)#3	(3)#1	(3)#2/0	(3)#3/0	(3)#4/0
	Manufacturer	N/A	N/A	N/A	N/A	N/A	N/A	N/A	N/A
	Catalog #	N/A	N/A	N/A	N/A	N/A	N/A	N/A	N/A
	Length (Max Ft)	N/A	N/A	N/A	N/A	N/A	N/A	N/A	N/A
	Cable Dia (in)	0.324"	0.324"	0.324"	0.352"	0.446"	0.532"	0.584"	0.642"
	Appleton Connector	(3) -CG-3150	(3) -CG-3150	(3) -CG-3150	(3) -CG-3150	(3)-CG-3775	(3) -CG-5075	(3) -CG-5075	(3) -CG-6275
	Connector Range	0.312"-0.437"	0.312"-0.437"	0.312"-0.437"	0.312"-0.437"	0.375"-0.500"	0.500"-0.625"	0.500"-0.625"	0.625"-0.750"
	Meyers Hub	(3) 1/2" - STA-1	(3) 1/2" - STA-1	(3) 1/2" - STA-1	(3) 1/2" - STA-1	(3) 3/4" - STA-2	(3) 3/4" - STA-2	(3) 3/4" - STA-2	(3) 3/4" - STA-2
P-02A	Description	(1)#8	(1)#8	(1)#8	(1)#8	(1)#6	(1)#6	(1)#6	(1)#4
	Manufacturer	N/A	N/A	N/A	N/A	N/A	N/A	N/A	N/A
	Catalog #	N/A	N/A	N/A	N/A	N/A	N/A	N/A	N/A
	Length (Max Ft)	N/A	N/A	N/A	N/A	N/A	N/A	N/A	N/A
	Cable Dia (in)	0.216"	0.216"	0.216"	0.216"	0.254"	0.254"	0.254"	0.324"
	Appleton Connector	(1)-GC-1850	(1)-GC-1850	(1)-GC-1850	(1)-GC-1850	(1)-GC-1850	(1)-GC-1850	(1)-GC-1850	(1)-GC-3150
	Connector Range	0.187"-0.312"	0.187"-0.312"	0.187"-0.312"	0.187"-0.312"	0.187"-0.312"	0.187"-0.312"	0.187"-0.312"	0.312"-0.437"
	Hub	(1) 1/2" - STA-1	(1) 1/2" - STA-1	(1) 1/2" - STA-1	(1) 1/2" - STA-1	(1) 1/2" - STA-1	(1) 1/2" - STA-1	(1) 1/2" - STA-1	(1) 1/2" - STA-1
P-02B	Description	(1)#8	(1)#8	(1)#8	(1)#8	(1)#6	(1)#6	(1)#6	(1)#4
	Manufacturer	Southwire	Southwire	Southwire	Southwire	Southwire	Southwire	Southwire	Southwire
P-05 & P-06	Description	(3)#4	(3)#4	(3)#4	(3)#3	(3)#1	(3)#2/0	(3)#3/0	(3)#3/0
	Manufacturer	N/A	N/A	N/A	N/A	N/A	N/A	N/A	N/A
	Catalog #	N/A	N/A	N/A	N/A	N/A	N/A	N/A	N/A
	Length (Max Ft)	N/A	N/A	N/A	N/A	N/A	N/A	N/A	N/A
	Cable Dia (in)	0.324"	0.324"	0.324"	0.352"	0.446"	0.532"	0.584"	0.584"
	Appleton Connector	(3) -CG-3150	(3) -CG-3150	(3) -CG-3150	(3) -CG-3150	(3)-CG-3775	(3) -CG-5075	(3) -CG-5075	(3) -CG-5075
	Connector Range	0.312"-0.437"	0.312"-0.437"	0.312"-0.437"	0.312"-0.437"	0.375"-0.500"	0.500"-0.625"	0.500"-0.625"	0.500"-0.625"
	Hub	(3) 1/2" - STA-1	(3) 1/2" - STA-1	(3) 1/2" - STA-1	(3) 1/2" - STA-1	(3) 3/4" - STA-2	(3) 3/4" - STA-2	(3) 3/4" - STA-2	(3) 3/4" - STA-2
P-07 & P-10	Description	(3)#14 W/G, TC	(3)#14 W/G, TC	(3)#12 W/G, TC	(3)#10 W/G, TC	(3)#10 W/G, TC	(3)#8 W/G, TC	(3)#6 W/G, TC	(3)#4 W/G, TC
	Manufacturer	Houston Wire	Houston Wire	Houston Wire	Houston Wire	Houston Wire	Houston Wire	Houston Wire	Houston Wire
	Catalog #	HW151 1405	HW151 1405	HW151 1205	HW151 1005	HW151 1005	HW 154 00804	HW 154 00604	HW 154 00404
	Length (Max Ft)	19 FT	19 FT	19 FT	19 FT	19 FT	19 FT	19 FT	19 FT
	Cable Dia (in)	0.41"	0.41"	0.46"	0.58"	0.58"	0.61"	0.76"	0.97"
	Appleton Connector	(2) -CG-3150	(2) -CG-3150	(2) -CG-3750	(2) -CG-5050	(2) -CG-5050	(2) - CG-5075	(2) - CG-7575	(2) - CG-87100
	Connector Range	0.312"-0.437"	0.312"-0.437"	0.375"-0.500"	0.500"-0.625"	0.500"-0.625"	0.500"-0.625"	0.750"-0.875"	0.875"-1.000"
	Hub	(2) 1/2" - STA-1	(2) 1/2" - STA-1	(2) 1/2" - STA-1	(2) 1/2" - STA-1	(2) 1/2" - STA-1	(2) 3/4" - STA-2	(2) 3/4" - STA-2	(2) 1" - STA-3
P-08 & P-11	Description	(3)#14	(3)#14	(3)#12	(3)#10	(3)#10	(3)#8	(3)#6	(3)#4
	Manufacturer	Southwire	Southwire	Southwire	Southwire	Southwire	Southwire	Southwire	Southwire
P-09A & 8, P-12A & 8	Description	(1)#14	(1)#14	(1)#12	(1)#10	(1)#10	(1)#8	(1)#6	(1)#6
	Manufacturer	Southwire	Southwire	Southwire	Southwire	Southwire	Southwire	Southwire	Southwire

REVISIONS	BY

IMPROVEMENTS TO WASTEWATER COLLECTION SYSTEM

LIFT STATION CONSTRUCTION DETAILS

ELECTRICAL STANDARDS

FINAL SUBMITTAL

ECUA
EMERALD COAST UTILITIES AUTHORITY

APPROVED BY:

Drawn:
Designed:
Checked:
Date: MAY '13
Scale:
Project No:
Sheet No. 11
Of 18 Sheets

ALL WORK SHALL BE CONSTRUCTED IN ACCORDANCE WITH THE LATEST EDITION OF THE E.C.U.A. STANDARD SPECIFICATIONS

Power & Control Conductors, CGB's and Hubs

Cable Number	Description	Manufacturer	Catalog Numer	Length (Max Ft)	Cable Diameter	Appleton Liquidtight Cable Connector	Connector Cable Range	Crouse-Hinds Myers Hub	From Panel/Enclosure	To Panel/Enclosure
P-14	(1)#8 AWG	N/A	N/A	AS REQ'D	N/A	N/A	N/A	N/A	Field	Power Panel
P-15	3-1/C #12 AWG	N/A	N/A	AS REQ'D	N/A	N/A	N/A	N/A	Power Panel	Power Panel
P-16	3-1/C #12 AWG	N/A	N/A	AS REQ'D	N/A	N/A	N/A	N/A	Power Panel	Power Panel
C-01	(16) #14 AWG, Tray Cable	Houston Wire & Cable	HW 151 01416	24 FT	0.68"	(2) - CG-6275	0.625"-0.750"	(2) 3/4" - STA-2	Power Panel	Control Panel
C-02	(5) #14 AWG, Tray Cable	Houston Wire & Cable	HW 151 01405	19 FT	0.41"	(2) - CG-3750	0.375"-0.500"	(2) 1/2" - STA-1	Power Panel	Pump 1 Panel
C-03	(16) #14 AWG, Tray Cable	Houston Wire & Cable	HW 151 01416	22 FT	0.68"	(2) - CG-6275	0.625"-0.750"	(2) 3/4" - STA-2	Pump 1 Panel	Control Panel
C-04	(16) #14 AWG, Tray Cable	Houston Wire & Cable	HW 151 01416	19 FT	0.68"	(2) - CG-6275	0.625"-0.750"	(2) 3/4" - STA-2	Control Panel	Pump 2 Panel
C-05	1 Triad #16 SH, Tray Cable	Houston Wire & Cable	HW 121 1601T	22 FT	0.35"	(2) - CG-3150	0.312"-0.437"	(2) 1/2" - STA-1	Pump 1 Panel	Control Panel
C-06	1 Pair #16 SH, Tray Cable	Houston Wire & Cable	HW 120 01601	22 FT	0.33"	(2) - CG-2575	0.250"-0.375"	(2) 3/4" - STA-2	Pump 1 Panel	Control Panel
C-07	1 Triad #16 SH, Tray Cable	Houston Wire & Cable	HW 121 1601T	19 FT	0.35"	(2) - CG-3150	0.312"-0.437"	(2) 1/2" - STA-1	Pump 2 Panel	Control Panel
C-08	1 Pair #16 SH, Tray Cable	Houston Wire & Cable	HW 120 01601	19 FT	0.33"	(2) - CG-2575	0.250"-0.375"	(2) 3/4" - STA-2	Pump 2 Panel	Control Panel
C-09	(5) #14 AWG, Tray Cable	Houston Wire & Cable	HW 151 01405	22 FT	0.41"	(2) - CG-3750	0.375"-0.500"	(2) 1/2" - STA-1	Power Panel	Pump 2 Panel
PUMP 1-PWR	Per Mfg Specs	N/A	N/A	N/A	N/A	CG Series based on Mfg Specs	N/A	STA Series based on Mfg Specs	Field (Pump 1)	Pump 1 Panel
PUMP 1-MTP	Per Mfg Specs	N/A	N/A	N/A	N/A	CG Series based on Mfg Specs	N/A	STA Series based on Mfg Specs	Field (Pump 1)	Pump 1 Panel
PUMP 1-SF	Per Mfg Specs	N/A	N/A	N/A	N/A	CG Series based on Mfg Specs	N/A	STA Series based on Mfg Specs	Field (Pump 1)	Pump 1 Panel
PUMP 2-PWR	Per Mfg Specs	N/A	N/A	N/A	N/A	CG Series based on Mfg Specs	N/A	STA Series based on Mfg Specs	Field (Pump 2)	Pump 2 Panel
PUMP 2-MTP	Per Mfg Specs	N/A	N/A	N/A	N/A	CG Series based on Mfg Specs	N/A	STA Series based on Mfg Specs	Field (Pump 2)	Pump 2 Panel
PUMP 2-SF	Per Mfg Specs	N/A	N/A	N/A	N/A	CG Series based on Mfg Specs	N/A	STA Series based on Mfg Specs	Field (Pump 2)	Pump 2 Panel
Float Switch 1	Float Switch Cable	BY OTHERS	N/A	N/A	0.56"	(1) - CG-5050	0.500"-0.625"	(1) 1/2" - STA-1	Field (Float Switch)	Control Panel
Float Switch 2	Float Switch Cable	BY OTHERS	N/A	N/A	0.56"	(1) - CG-5050	0.500"-0.625"	(1) 1/2" - STA-1	Field (Float Switch)	Control Panel
Pressure Xducer	Pressure Transducer Cable	BY OTHERS	N/A	N/A	0.35"	(1) - G-3150	0.312"-0.437"	(1) 1/2" - STA-1	Field (Float Switch)	Control Panel
Antenna COAX	Coaxial Cable	BY OTHERS	N/A	N/A	0.408"	(1) - CG-3750	0.375"-0.500"	(1) 1/2" - STA-1	Field (Antenna)	Control Panel
CAT5-1	Ethernet	BELDEN	7922A	19 FT	0.301"	(2) - CG-1850	0.187"-0.312"	(2) 1/2" - STA-1	Pump 1 Panel	Control Panel
CAT5-2	Ethernet	BELDEN	7922A	22 FT	0.301"	(2) - CG-1850	0.187"-0.312"	(2) 1/2" - STA-1	Pump 2 Panel	Control Panel

REVISIONS	BY

IMPROVEMENTS TO WASTEWATER COLLECTION SYSTEM

LIFT STATION CONSTRUCTION DETAILS

ELECTRICAL STANDARDS

FINAL SUBMITTAL

EMERALD COAST UTILITIES AUTHORITY

APPROVED BY:

Drawn:
Designed:
Checked:
Date: MAY '13
Scale:
Project No:
Sheet No. 12
Of 18 Sheets

NOTES:

ALL WORK SHALL BE CONSTRUCTED IN ACCORDANCE WITH THE LATEST EDITION OF THE E.C.U.A. STANDARD SPECIFICATIONS

1) ALL SPARE WIRE WILL BE CLEARLY LABELED WITH THE CABLE NUMBER & A SPARE DESIGNATION ON INDIVIDUAL WIRES (S1, S2, ect...). THESE SPARES SHOULD BE ABLE TO REACH ALL TERMINAL BLOCKS IN THE PANEL.

2) SPARE CONDUCTORS SHOULD BE TRIMMED AND HEAT SHRINK SHOULD BE USED TO SECURE THE SPARE CONDUCTORS IN THE CABLE.

3) THE INNER CONNECTING CONDUCTORS BETWEEN THE PANELS ARE CODED AS FOLLOWS: THE FIRST GROUP OF CHARACTER IS THE WIRE NUMBER AND THE SECOND GROUP IS THE COLOR (I.E. 1(BK) SIGNIFIES THAT THE WIRE NUMBER IS 1 AND THE COLOR IS BLACK). WIRE COLOR CODE AS FOLLOWS: BK-BLACK, RD-RED, BU-BLUE, OR-ORANGE, YL-YELLOW, BN-BROWN. FOR COLORS THAT ARE DENOTED AS XX/YY, XX IS THE BASE COLOR AND YY IS THE SPIRAL STRIPE (I.E. RD/BK IS A RED WIRE WITH A BLACK SPIRAL STRIPE).

4) SEE SHEETS 11 AND 12 FOR PANEL TO PANEL INNER CONNECTING CONDUCTOR AND CABLE DETAILS.

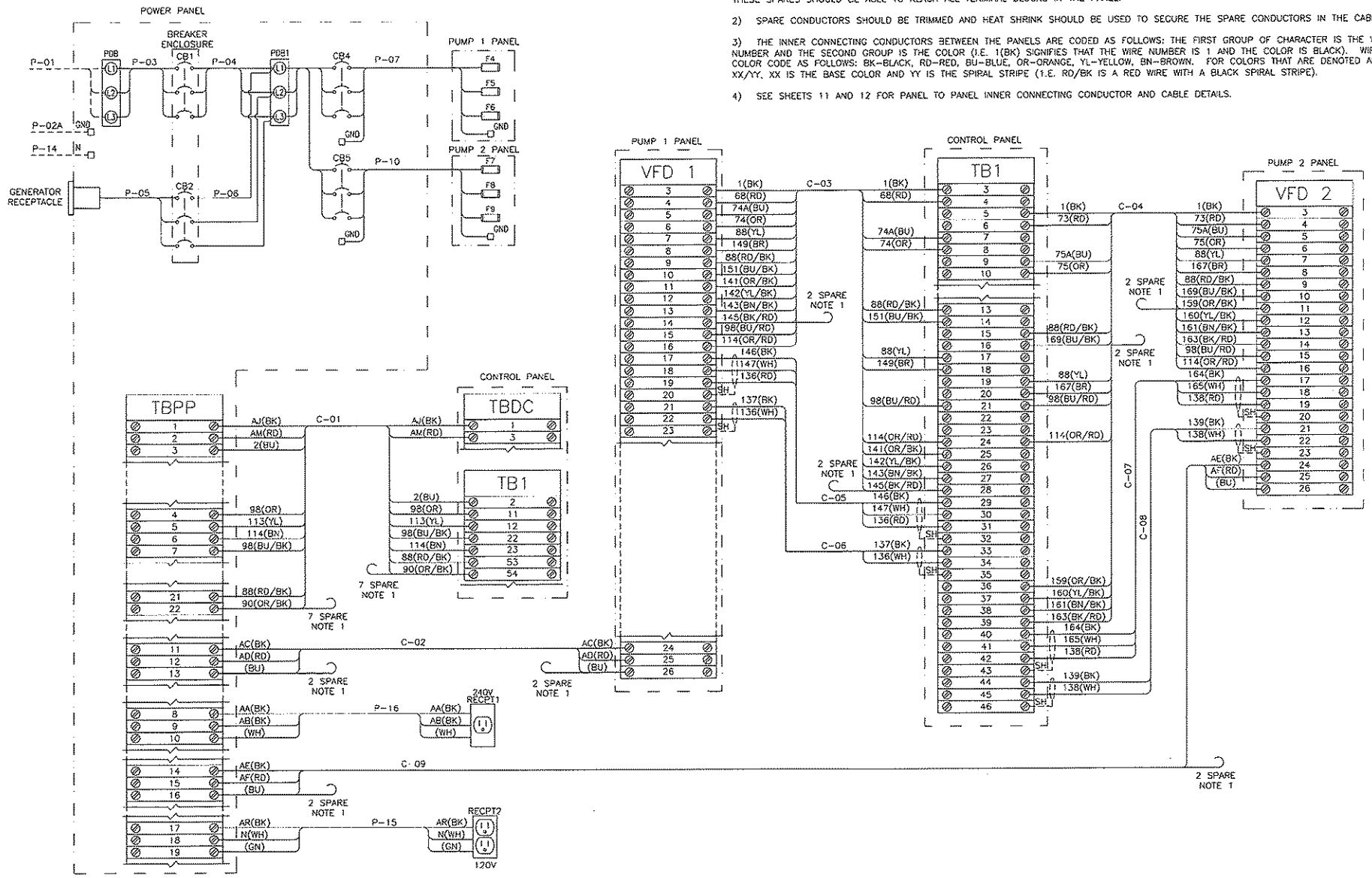

REVISIONS	BY

IMPROVEMENTS TO WASTEWATER COLLECTION SYSTEM

LIFT STATION CONSTRUCTION DETAILS

ELECTRICAL STANDARDS

FINAL SUBMITTAL

EMERALD COAST UTILITIES AUTHORITY

APPROVED BY:

Drawn:
Designed:
Checked:
Date: MAY '13
Scale:
Project No:
Sheet No. 13
OF 18 Sheets

ALL WORK SHALL BE CONSTRUCTED IN ACCORDANCE WITH THE LATEST EDITION OF THE E.C.U.A. STANDARD SPECIFICATIONS

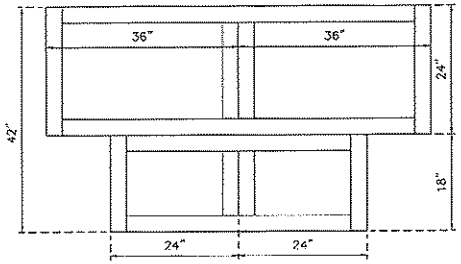

TOP VIEW

NOTES:

1. TOP AND BOTTOM OF BASE TO BE LEFT OPEN.
2. DRILL TOP OF BASE TO ATTACH ENCLOSURES AS REQUIRED.
3. DRILL BOTTOM OF BASE TO ATTACH TO SLAB AS REQUIRED.

ATTENTION

THIS LAYOUT IS ONE OF TWO (2) POSSIBLE CHOICES – SEE SHEET 14 FOR THE OTHER OPTION. IF THIS LAYOUT OPTION IS SELECTED, SEE SHEET 7A FOR ASSOCIATED PANEL LAYOUT DETAILS.

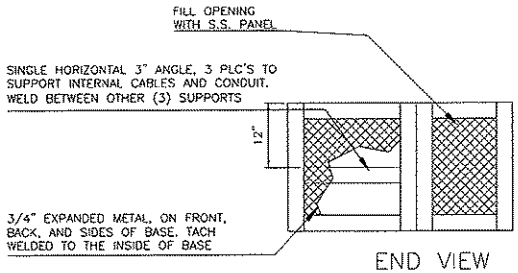

END VIEW

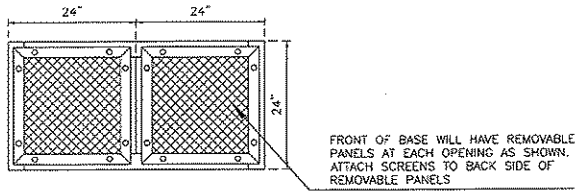

FRONT VIEW

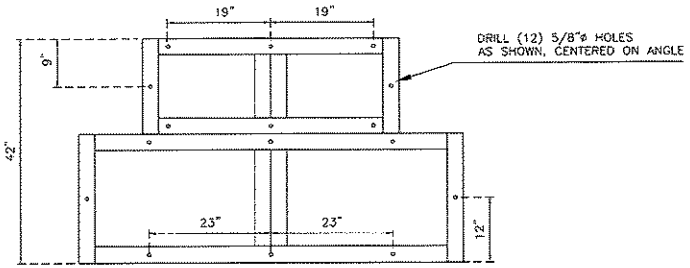

BOTTOM VIEW

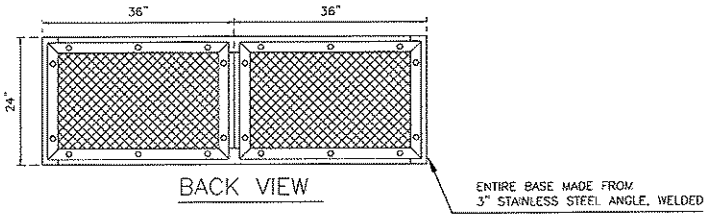

BACK VIEW

REVISIONS	BY

IMPROVEMENTS TO WASTEWATER COLLECTION SYSTEM

LIFT STATION CONSTRUCTION DETAILS

ELECTRICAL STANDARDS

FINAL SUBMITTAL

EMERALD COAST UTILITIES AUTHORITY

APPROVED BY:

Drawn:	
Designed:	
Checked:	
Date:	MAY '13
Scale:	
Project No:	
Sheet No.	14A
OF 18 Sheets	

ALL WORK SHALL BE CONSTRUCTED IN ACCORDANCE WITH THE LATEST EDITION OF THE E.C.U.A. STANDARD SPECIFICATIONS

Power Panel Fuse Schedule				
Fuse	Type	Voltage	Amps	Description
F1	KTK-R-1	600	1A	Phase Monitor A Phase
F2	KTK-R-1	600	1A	Phase Monitor B Phase
F3	KTK-R-1	600	1A	Phase Monitor C Phase
F12	AGC-3	250	3A	Power Supply 1 Primary
F13	AGC-3	250	3A	Power Supply 2 Primary

Pump 1 Panel Fuse Schedule				
Fuse	Type	Voltage	Amps	Description
F4	A70PXX-X	700	XXXA	Pump 1 Phase A
F5	A70PXX-X	700	XXXA	Pump 1 Phase B
F6	A70PXX-X	700	XXXA	Pump 1 Phase C
F7	AGC-1	250	1A	Pump 1 Control Power

SEE SHEET 11 FOR FUSE TYPE AND AMPS

Pump 2 Panel Fuse Schedule				
Fuse	Type	Voltage	Amps	Description
F8	A70PXX-X	700	XXXA	Pump 2 Phase A
F9	A70PXX-X	700	XXXA	Pump 2 Phase B
F10	A70PXX-X	700	XXXA	Pump 2 Phase C
F11	AGC-1	250	1A	Pump 2 Control Power

SEE SHEET 11 FOR FUSE TYPE AND AMPS

Control Panel Fuse Schedule				
Fuse	Type	Voltage	Amps	Description
F14	AGC-10	250	10A	Power Supply 1 Secondary
F15	AGC-10	250	10A	Power Supply 2 Secondary
F16	AGC-10	250	10A	Control Power
F17	AGC-10	250	10A	Batteries
F18	AGC-2	250	2A	Radio Power Supply Primary
F19	AGC-2	250	2A	Radio Power Supply Secondary
F20	AGC-1/4	250	1/4A	Pump 1 Motor Thermal
F21	AGC-1/4	250	1/4A	Pump 2 Motor Thermal
F22	AGC-1/10	250	1/10A	Operator Interface
F23	AGC-1	250	1A	Digital Inputs 0.0-1.4
F24	AGC-1	250	1A	Digital Inputs 1.5-2.7
F25	AGC-2	250	2A	Digital Outputs 0.0-0.7
F26	AGC-2	250	2A	Digital Outputs 1.0-1.7
F27	AGC-1-1/2	250	1-1/2A	PLC Power
F28	AGC-3/4	250	3/4A	Process Transmitter Supply
F29	AGC-1/10	250	1/10A	Analog Inputs
F30	AGC-1/10	250	1/10A	Analog Outputs
F31	GMA-1/4	250	1/4A	Analog Input 2
F32	GMA-1/4	250	1/4A	Analog Input 3
F33	GMA-1/4	250	1/4A	Analog Input 4

HMI BUTTON LEGEND
F1
FAULT RESET/ENABLE INTRUSION
SHIFT+F1
DISABLE INTRUSION
F2
ALTERNATE PUMP ASSIGNMENTS
F3
RESET PUMP 1 RUNTIME
SHIFT+F3
RESET PUMP 2 RUNTIME
F4
ALARMS SCREEN
F5
OVERVIEW SCREEN
F6
PUMP 1 SCREEN
F7
PUMP 2 SCREEN
F8
SETPOINTS SCREEN

CONTROL PANEL ISA INFORMATION TAGS

THIS AREA IN BLUE IS FOR INTRINSICALLY SAFE CIRCUITS AND DEVICES ONLY. THIS AREA INCLUDES A 6" SPACE BETWEEN THE BACKPANEL AND THE ENCLOSURE WALLS AND DOOR INCLUDING THE BOTTOM OF THE ENCLOSURE. ONLY INTRINSICALLY SAFE DEVICES AND WIRING ARE ALLOWED IN THIS AREA. DO NOT ROUTE NON-INTRINSICALLY SAFE WIRING THROUGH THE AREA OF ENCLOSURE.

WARNING

SUBSTITUTION OF COMPONENTS MAY IMPAIR INTRINSIC SAFETY

PUMP 1 & 2 INDOOR FUSE TAG INFORMATION

WARNING

FUSES FED FROM BELOW BUS

CONTROL PANEL EXTERIOR TAG INFORMATION

WARNING

TO PREVENT IGNITION OF FLAMMABLE OR COMBUSTIBLE ATMOSPHERES DISCONNECT POWER BELOW BEFORE SERVICING

PROVIDES INTRINSICALLY SAFE CIRCUITS INSIDE FOR USE IN CLASS I, GROUPS A, B, C AND D WITH CONNECTION REFERENCE DRAWINGS ON MAIN NAMEPLATE LABEL

CONTROL PANEL DEVICE TAG INFORMATION

SECURELY CLOSED ALL INNER DOOR LATCHES BEFORE CLOSING OUTER DOOR. FAILURE TO FOLLOW THESE INSTRUCTIONS COULD CAUSE THE OUTER DOOR TO JAM WHEN RE-OPENED

Nameplate Data								
Total Load (FLA)	54	61	67	79	91	107	138	164
Motor Hp	1	2	3	5	7.5	10	15	20
Motor FLA	4.2	6.8	9.6	15.2	22	28	42	54

Torque Rating Table								
	Horsepower							
Component	1	2	3	5	7.5	10	15	20
Incoming Distribution Block (PDB1)	120lb-in/13.5N-m	120lb-in/13.5N-m	120lb-in/13.5N-m	120lb-in/13.5N-m	120lb-in/13.5N-m	275lb-in/31.0N-m	275lb-in/31.0N-m	275lb-in/31.0N-m
Incoming Neutral Block	45lb-in/5.1N-m	45lb-in/5.1N-m	45lb-in/5.1N-m	45lb-in/5.1N-m	45lb-in/5.1N-m	45lb-in/5.1N-m	45lb-in/5.1N-m	45lb-in/5.1N-m
Main Ground Block	25lb-in/2.8N-m	25lb-in/2.8N-m	25lb-in/2.8N-m	25lb-in/2.8N-m	35lb-in/3.9N-m	35lb-in/3.9N-m	35lb-in/3.9N-m	35lb-in/3.9N-m
Motor Distribution Block (PDB2 & 3)	35lb-in/4.0N-m	35lb-in/4.0N-m	35lb-in/4.0N-m	35lb-in/4.0N-m	35lb-in/4.0N-m	40lb-in/4.5N-m	120lb-in/13.5N-m	120lb-in/13.5N-m
Motor Ground Block	35lb-in/4.0N-m	35lb-in/4.0N-m	35lb-in/4.0N-m	35lb-in/4.0N-m	35lb-in/4.0N-m	40lb-in/4.5N-m	45lb-in/5.1N-m	45lb-in/5.1N-m

REVISIONS	BY

IMPROVEMENTS TO WASTEWATER COLLECTION SYSTEM

LIFT STATION CONSTRUCTION DETAILS

ELECTRICAL STANDARDS

FINAL SUBMITTAL

EMERALD COAST UTILITIES AUTHORITY

APPROVED BY:

Drawn:
Designed:
Checked:
Date: MAY '13
Scale:
Project No:
Sheet No. 15
OF 18 Sheets

ALL WORK SHALL BE CONSTRUCTED IN ACCORDANCE WITH THE LATEST EDITION OF THE E.C.U.A. STANDARD SPECIFICATIONS

REVISIONS	BY

IMPROVEMENTS TO WASTEWATER COLLECTION SYSTEM

LIFT STATION CONSTRUCTION DETAILS

ELECTRICAL STANDARDS

FINAL SUBMITTAL

EMERALD COAST UTILITIES AUTHORITY

APPROVED BY:

HAZARDOUS (CLASSIFIED) LOCATION

CLASS I, ZONE 0 OR 1, GROUPS IIC, IIB, IIA or
CLASS I, DIVISION 1, GROUPS A,B,C,D
CLASS II, DIVISION 1, GROUPS E,F,G
CLASS III, DIVISION 1

NON-HAZARDOUS LOCATION

CLASS I, ZONE 2, GROUPS IIC, IIB, IIA or
CLASS I, DIVISION 2, GROUPS A,B,C,D

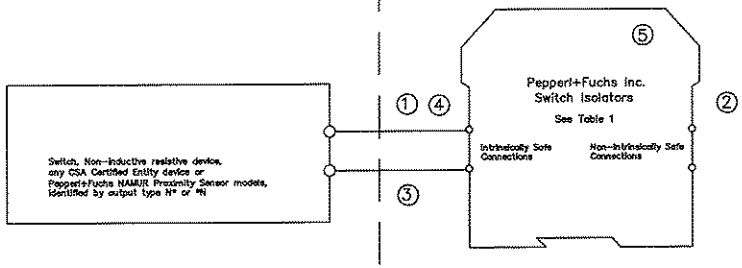

Notes:

① The intrinsically safe wiring must be installed in accordance with the Canadian Electrical Code CSA C22.1, Part 1, Appendix F.

② Barriers listed in Table 1 shall not be connected to any device that uses or generates in excess of 250Vrms or DC unless it has been determined that the voltage is adequately isolated from the barrier. Barriers listed in Table 2 shall not be connected to any device that uses or generates in excess of 60Vrms or DC unless the voltage is limited by an adequate means.

③ Any combination of up to 10 channels of the barriers listed in Table 1 or Table 2 may be connected in parallel and connected to a switch in a hazardous location.

④ The Entity concept allows interconnection of intrinsically safe apparatus with associated apparatus not specifically examined in combination as a system when the approved values of Voc and Isc for the associated apparatus are less than or equal to Vmax and Imax for the intrinsically safe apparatus and the approved values of Ca and La for the associated apparatus are greater than Ci + Ccable and Li + Lcable, respectively, for the intrinsically safe apparatus.

⑤ The following models with part number greater than 100000 are approved for mounting in a Class I, Zone 2, Groups IIC,IIB,IIA or Class I, Division 2, Groups A,B,C,D hazardous (classified) location: KF**-SR2-EX1.W, KF**-SR2-EX1.W.LB, KF**-SR2-EX2.W, KFD2-SR2-EX2.2S, KFD2-ST2-EX1.*, KFD2-ST2-EX2.*, KFD2-SOT2-EX1.*, KFD2-SOT2-EX2.*.

WARNING: Substitution of components may impair intrinsic safety and/or suitability for use in Class I, Division 2, Groups A,B,C,D or Class I, Zone 2, Groups IIC,IIB,IIA.
ADVERTISSEMENT: La substitution de composants peut compromettre la sécurité intrinsèque.

No changes without prior permission
CSA
THIS DRAWING CONTAINS PROPRIETARY DATA. NO DISCLOSURE, REPRODUCTION, OR USE OF ANY PART MAY BE MADE EXCEPT BY WRITTEN PERMISSION.

Title Installation Drawing for CSA Certified Switch Isolators

In.	Date	Cons.	Resp.	Appr.	Revisions	ECO No.
	2-20-2008					

Pepperl+Fuchs® Inc. Twinsburg, OH 44087-2202 | Repl. No. – | Draw. No. 116-0047j | Sh. 1 of 2

TABLE 1: Barriers Certified to CSA Standard C22.2 No. 157 (Um = 250 V)

Model Numbers	Terminals	SYSTEM V_{max}(V)	SYSTEM Res. (Ω)	ENTITY V_{oc} (V)	ENTITY I_{sc}(mA)	ENTITY C_a(uF) GRPS A,B	ENTITY C_a(uF) GRPS C,E	ENTITY C_a(uF) GRPS D,F,G	ENTITY L_a(mH) GRPS A,B	ENTITY L_a(mH) GRPS C,E	ENTITY L_a(mH) GRPS D,F,G
KFD2-SOT-Ex1*,KFD2-SOT-Ex2* KFD2-SR-Ex1*,KFD2-SR-Ex2* KFD2-SRT-Ex1* KFD2-ST-Ex1*,KFD2-ST-Ex2* KFA5-SR2-Ex1*,KFA5_SR2-Ex2* KFA6-SR2-Ex1*,KFA6-SR2-Ex2* KFD2-SR2-Ex1*,KFD2-SR2-Ex2*	1-3, 2-3; 4-6, 5-6	12.6	650	12.9	19.8	1.273	3.820	10.18	84.88	298.7	744.4
KFA5-SOT2-Ex1*,KFA5-SOT2-Ex2* KFA6-SOT2-Ex1*,KFA6-SOT2-Ex2*	1-3, 2-3; 4-6, 5-6	10.5	811	10.5	13.0	2.66	7.9	21.3	192	671	1000

TABLE 2: Barriers Certified to CSA Standard E79-11 (Um = 60 V)

Model Numbers	Terminals	Load Parameters U_o (V_{oc})	I_o (I_{sc})	C_a(uF) GRPS IIC (A,B)	C_a(uF) GRPS IIB (C,E)	C_a(uF) GRPS IIA (D,F,G)	L_a(mH) GRPS IIC (A,B)	L_a(mH) GRPS IIB (C,E)	L_a(mH) GRPS IIA (D,F,G)
KFD2-SOT2-Ex1*,KFD2-SOT2-Ex2* KFD2-ST2-Ex1*,KFD2-ST2-Ex2*	1-3, 2-3; 4-6, 5-6	10.5	13.0	2.66	7.9	21.3	192	671	1000

No changes without prior permission
CSA
THIS DRAWING CONTAINS PROPRIETARY DATA. NO DISCLOSURE, REPRODUCTION, OR USE OF ANY PART MAY BE MADE EXCEPT BY WRITTEN PERMISSION.

Title Installation Drawing for CSA Certified Switch Isolators

In.	Date	Cons.	Resp.	Appr.	Revisions	ECO No.
	2-20-2008					

Pepperl+Fuchs® Inc. Twinsburg, OH 44087-2202 | Repl. No. – | Draw. No. 116-0047j | Sh. 2 of 2

Drawn	
Designed	
Checked	
Date	MAY '13
Scale	
Project No	
Sheet No.	16
	Of 18 Sheets

GENERAL ELECTRICAL NOTES

NEW WORK:

1. ENTIRE ELECTRICAL INSTALLATION SHALL BE IN ACCORDANCE WITH THE LATEST EDITION (UNLESS NOTED OTHERWISE) OF THE FOLLOWING CODES AND STANDARDS:
   1.1. NATIONAL ELECTRICAL CODE (NFPA 70).
   1.2. STANDARD FOR FIRE PROTECTION IN WASTEWATER TREATMENT AND COLLECTION FACILITIES (NFPA 820).
2. THE CONTRACTOR SHALL BE RESPONSIBLE FOR READING ALL PROJECT SPECIFICATIONS AND WILL BE RESPONSIBLE FOR MEETING ALL REQUIREMENTS OUTLINED IN THE SPECIFICATIONS.
3. CONTRACTOR SHALL COORDINATE ALL WORK WITH OTHER TRADES PRIOR TO ROUGH-IN AND INSTALLATION.
4. WORKING SPACE FOR ALL ELECTRICAL AND CONTROL EQUIPMENT OPERATING AT 600V VOLTS OR LESS TO GROUND AND LIKELY TO REQUIRE EXAMINATION, ADJUSTMENT, SERVICING, OR MAINTENANCE WHILE ENERGIZED SHALL COMPLY WITH NEC, ARTICLE 110.26.
5. THE ELECTRICAL DESIGN PROVIDES A NUMBER OF BRANCH CIRCUITS, AMPACITY AND OVERCURRENT PROTECTION FOR OTHER DIVISIONS DESIGN BASIS EQUIPMENT CONFORMING TO MANUFACTURER'S SPECIFICATIONS AVAILABLE AT TIME OF DESIGN. THE CONTRACTOR SHALL VERIFY ALL EQUIPMENT LOADS PRIOR TO ROUGH-IN. IF REQUIREMENTS OF EQUIPMENT ACTUALLY PROVIDED UNDER CONTRACT FOR CONSTRUCTION ARE DIFFERENT, CONTRACTOR SHALL MAKE ALL CHANGES NECESSARY WITHOUT INCREASE IN THE CONTRACT AMOUNT. SUCH CHANGES SHALL BE BASED UPON REQUIREMENTS, NAMEPLATE VALUES AND CODE REQUIREMENTS, WHICHEVER IS MORE STRINGENT, AND MAY INCLUDE, BUT ARE NOT LIMITED TO: SIZE OF CONDUCTORS, SIZE OF CONDUIT, QUANTITY OF CONDUCTORS AND CONDUITS, TYPE AND SIZE OF CIRCUIT BREAKER OR DISCONNECT, OVERLOADS, FULL-VOLTAGE STARTERS, REDUCED VOLTAGE SOFT STARTERS, VARIABLE FREQUENCY DRIVES, AND FUSE PROTECTION.
6. THE ELECTRICAL CONTRACTOR IS REQUIRED TO COORDINATE, PROVIDE, AND INSTALL A FULLY OPERATIONAL AND CODE COMPLIANT ELECTRICAL SYSTEM. THIS MAY INCLUDE THE ADDITION OF ELECTRICAL ITEMS NOT SHOWN ON THE ELECTRICAL PLANS, BUT REQUIRED FOR SYSTEM OPERATION.
7. CONTRACTOR SHALL COORDINATE INSTALLATION OF ELECTRICAL SERVICE WITH ELECTRICAL UTILITY COMPANY PROVIDING ELECTRICAL SERVICE TO FACILITY. CONTRACTOR SHALL PAY ALL FEES ASSESSED BY ELECTRICAL UTILITY COMPANY TO PROVIDE ELECTRICAL SERVICE TO FACILITY.
8. CONTRACTOR SHALL EXCAVATE AND CONDUCT DEMOLITION SO AS TO AVOID DAMAGE TO EXISTING UTILITIES AND OTHER UNDERGROUND OR CONCEALED ITEMS. IF EXISTING OR NEW ITEMS ARE DAMAGED, THE CONTRACTOR SHALL NOTIFY THE OWNER AT ONCE OF ALL DAMAGE AND SHALL REPAIR (OR REPLACE IF NECESSARY) TO THE ORIGINAL CONDITION TO THE SATISFACTION OF OWNER AND ENGINEER AT NO CHARGE IN THE CONTRACT AMOUNT.
9. THE CONTRACTOR SHALL BE RESPONSIBLE FOR PROVIDING DETAILED ELECTRICAL AND CONTROL EQUIPMENT LAYOUT DRAWINGS TO THE ENGINEER AND OWNER FOR APPROVAL PRIOR TO INSTALLATION.
10. ALL CONDUITS NOT LOCATED UNDER SLAB SHALL HAVE A MINIMUM BURIAL DEPTH OF 42", UNLESS NOTED OTHERWISE.
11. CONDUITS SHALL BE BURIED 42" (MINIMUM) BELOW GRADE WITH MARKER TAPE 6" ABOVE TOP OF CONDUIT, UNLESS NOTED OTHERWISE.
12. MINIMUM SIZE CONDUIT SHALL BE 1" (UNLESS NOTED OTHERWISE).
13. CONDUIT ROUTINGS AND DEVICE/EQUIPMENT LOCATIONS SHOWN ARE DIAGRAMMATIC ONLY. CONTRACTOR SHALL FIELD ROUTE AND LOCATE AS REQUIRED.
14. CONTRACTOR SHALL PROVIDE PULL BOXES IN POWER CIRCUIT CONDUIT AS REQUIRED TO LIMIT THE NUMBER OF BENDS TO A MAXIMUM OF 270° OR THREE 90° BENDS.
15. ALL WIRE SHALL BE COPPER.
16. ALL ELECTRICAL CIRCUITS SHALL INCLUDE A GREEN GROUNDING CONDUCTOR SIZED PER NEC.
17. CONDUCTORS SHALL BE TERMINATED ON TERMINAL BLOCKS.
18. THE CONTRACTOR SHALL TAG ALL POWER AND CONTROL SYSTEM CABLING AT ALL TERMINATION POINTS.
19. FINAL CONNECTION TO ALL EQUIPMENT IS SHOWN DIAGRAMMATIC. PROVIDE FINAL CONNECTION AS REQUIRED PER MANUFACTURER OF EQUIPMENT.
20. CONTRACTOR SHALL MAINTAIN A SET OF PRINTS AND MARK-UP DURING CONSTRUCTION TO REFLECT "AS-BUILT" CONDITIONS. PRINTS SHALL BE DELIVERED TO THE ENGINEER UPON COMPLETION OF THE PROJECT.
21. ALL HARDWARE SHALL BE STAINLESS STEEL.
22. ALUMINUM CONDUIT SHALL BE COATED WITH (2) WRAPS OF ANTI-CORROSION TAPE OR RUN THROUGH A SCHEDULE 80 PVC SLEEVE TO WHEN IN CONTACT WITH CONCRETE.
23. BARE COPPER SHALL BE COATED WITH (2) WRAPS OF ANTI-CORROSION TAPE OR RUN THROUGH A SCHEDULE 80 PVC SLEEVE TO WHEN IN CONTACT WITH CONCRETE.
24. ENGINEER OF RECORD SHALL BE RESPONSIBLE FOR FINAL SIZING OF ALL EQUIPMENT.

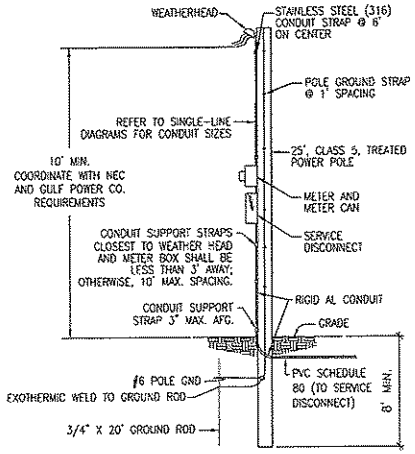

SERVICE LATERAL CONDUIT SHALL BE 3" (MIN) SCHEDULE 80 PVC BELOW GRADE AND 3" (MIN) RIGID AL CONDUIT ABOVE GRADE. ANY REQUIREMENTS BY THE UTILITY COMPANY SHALL PREVAIL OVER THE REQUIREMENTS OUTLINED HERE AND SHALL BE COORDINATED BY THE ELECTRICAL CONTRACTOR PRIOR TO INSTALLATION.

A3 UTILITY POLE DETAIL
NOT TO SCALE

ALL WORK SHALL BE CONSTRUCTED IN ACCORDANCE WITH THE LATEST EDITION OF THE E.C.U.A. STANDARD SPECIFICATIONS

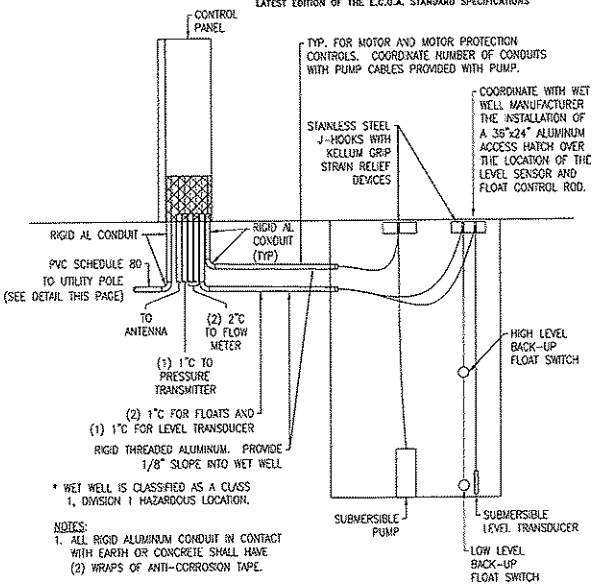

* WET WELL IS CLASSIFIED AS A CLASS 1, DIVISION 1 HAZARDOUS LOCATION.

NOTES:
1. ALL RIGID ALUMINUM CONDUIT IN CONTACT WITH EARTH OR CONCRETE SHALL HAVE (2) WRAPS OF ANTI-CORROSION TAPE.

B4 TYPICAL WET WELL SECTION DETAIL
NOT TO SCALE

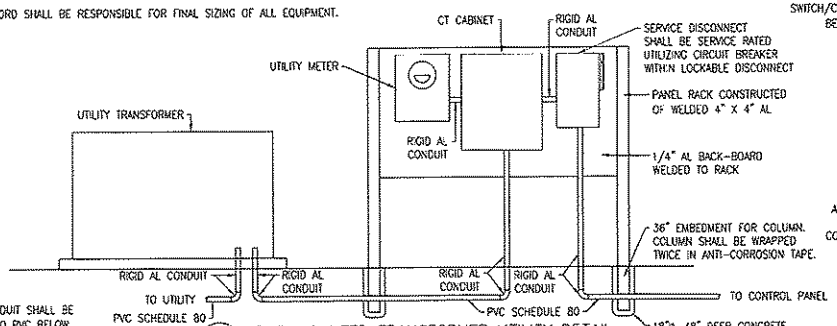

* SERVICE LATERAL CONDUIT SHALL BE 3" (MIN) SCHEDULE 80 PVC BELOW GRADE AND 3" (MIN) RIGID ALUMINUM CONDUIT ABOVE GRADE.

A1 PAD MOUNTED TRANSFORMER UTILITY DETAIL
NOT TO SCALE

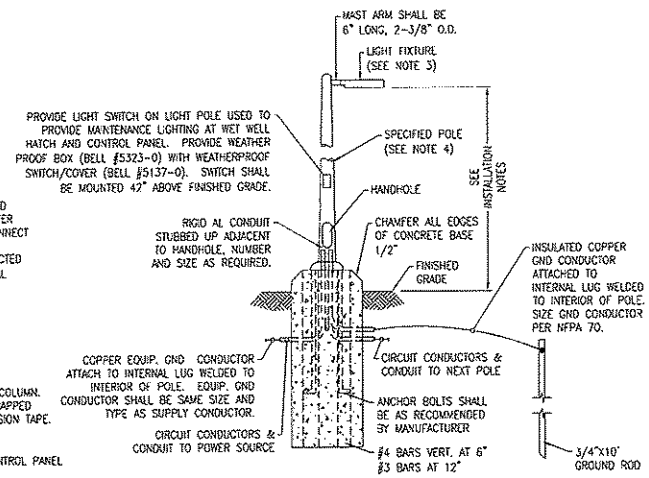

A4 LIGHT POLE INSTALLATION DETAIL
NOT TO SCALE

LIGHTING PERFORMANCE CRITERIA:
1. LIGHTING FIXTURE LAYOUT SHALL BE BASED UPON ACHIEVING 20 FOOT CANDLES (+/- 20%) AT THE FRONT OF THE CONTROL PANEL (WORK-PLANE OF 24" AFG) AND AT THE WET WELL ACCESS HATCH (WORKPLANE OF 0" AFG).
2. GENERAL SECURITY LIGHTING SHALL ENCOMPASS ACCESS GATE AND ALL PIPING/EQUIPMENT AT A MIN: AVERAGE 1 FOOT-CANDLE (+/- 20%, AT WORKPLANE OF 0" AFG).
3. REFER TO LIGHTING CONTROL DIAGRAM ON SHEET No. 18 FOR ADDITIONAL REQUIREMENTS.

LIGHT POLE INSTALLATION NOTES:
1. BURIAL AND DIAMETER DIMENSIONS INDICATED ARE FOR NOMINAL MINIMAL SIZES ONLY. FINAL DIMENSIONS SHALL BE DETERMINED BY A REGISTERED STRUCTURAL ENGINEER IN THE STATE OF FLORIDA. BASED UPON FIXTURES PROVIDED. PROVIDE SIGNED, DATED, AND SEALED PLANS FOR EACH INSTALLATION TYPE AND FIXTURE TYPE AS PART OF LIGHTING SUBMITTAL PACKAGE.
2. THE POLE AND FOUNDATION DESIGN SHALL BE BY A DELEGATED PROFESSIONAL ENGINEER TO MEET THE FOLLOWING CRITERIA:
   2.1. DESIGN WIND SPEED 160 MPH WITH A 1.3 GUST FACTOR. EXPOSURE CATEGORY C.
   2.2. SIZE EMBEDMENT FOR A MAXIMUM PERMANENT POLE DEFLECTION AFTER DESIGN WIND SPEED EVENT OF 1.00".
   2.3. ALUMINUM, ROUND OR SQUARE, TAPERED.
3. FIXTURE SHALL BE AMERICAN ELECTRIC LIGHTING AT82 FIXTURE, 40 LED, 1000mA DRIVER, 120V, TYPE 4, WITH PHOTOCONTROL.
4. REFER TO SPECIFICATIONS SECTION 16521 "EXTERIOR LIGHTING" FOR ADDITIONAL REQUIREMENTS.
5. LIGHT FIXTURES SHALL BE MOUNTED AT 15'-0" (MAXIMUM) ABOVE FINISHED GRADE.

REVISIONS	BY

IMPROVEMENTS TO WASTEWATER COLLECTION SYSTEM
LIFT STATION CONSTRUCTION DETAILS
ELECTRICAL STANDARDS
FINAL SUBMITTAL

EMERALD COAST UTILITIES AUTHORITY

APPROVED BY:

Drawn:
Designed:
Checked:
Date: MAY '13
Scale:
Project No:
Sheet No. 17
of 18 Sheets

ALL WORK SHALL BE CONSTRUCTED IN ACCORDANCE WITH THE LATEST EDITION OF THE E.C.U.A. STANDARD SPECIFICATIONS

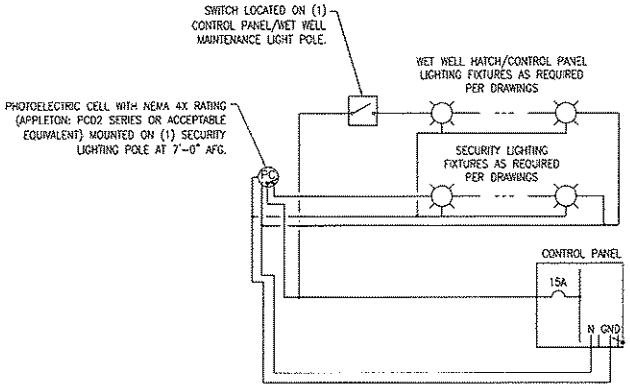

C2 TYPICAL LIGHTING CONTROL DIAGRAM
NOT TO SCALE

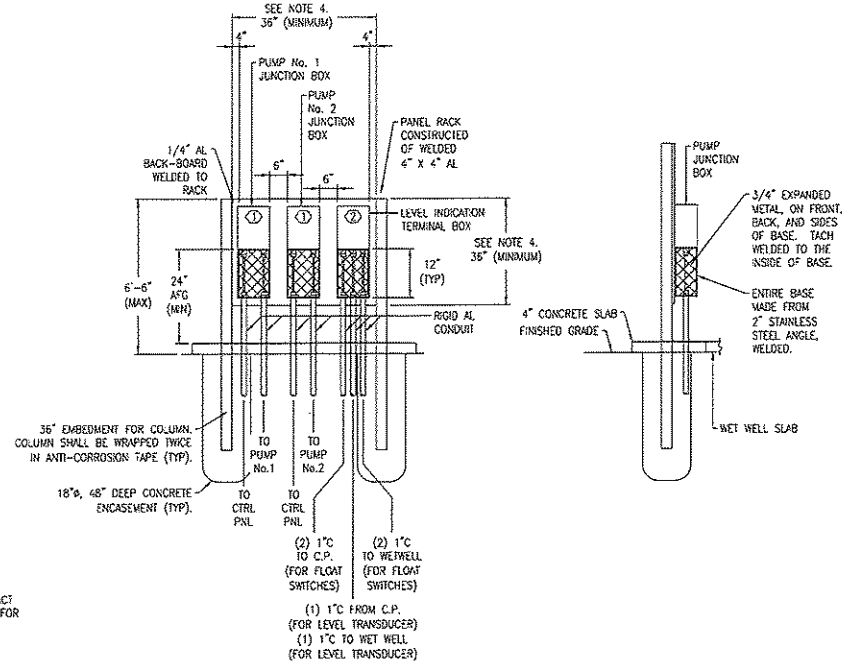

FRONT ELEVATION

SIDE ELEVATION

DETAIL NOTES:

1. THIS DETAIL SHALL ONLY APPLY WHEN THE CONTROL PANEL CANNOT BE PLACED WITHIN 6'-0" OF THE WET WELL TO ALLOW FOR CONNECTION OF STANDARD 50 FOOT PUMP CABLE CONNECTIONS.
2. BACKBOARD SHALL BE PLACED AT THE EDGE OF THE WET WELL SLAB BETWEEN THE WET WELL AND CONTROL PANEL.
3. JUNCTION BOXES SHALL BE MOUNTED SUCH THAT THEY ARE FACING THE WET WELL.
4. ENGINEER/CONTRACTOR SHALL SIZE JUNCTION BOXES AND BACKBOARDS BASED UPON INSTALLATION REQUIREMENTS PROVIDED AT TIME OF DESIGN.

KEY NOTES

① REFER TO "TYPICAL PUMP JUNCTION BOX ELEVATION" (THIS SHEET) FOR ADDITIONAL REQUIREMENTS.

② REFER TO "TYPICAL LEVEL INDICATION JUNCTION BOX ELEVATION" (THIS SHEET) FOR ADDITIONAL REQUIREMENTS.

A4 TYPICAL PUMP JUNCTION BOXES
NOT TO SCALE

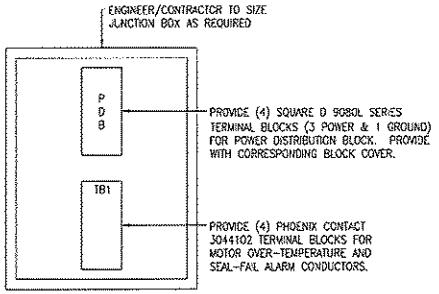

INTERIOR ELEVATION

DETAIL NOTES:

1. ALL TERMINAL BLOCKS SHALL BE PROVIDED WITH CORRESPONDING END BRACKETS AND END COVERS.
2. PROVIDE SEPARATE GROUND LUG IN EACH JUNCTION BOX, BONDED TO JUNCTION BOX.

A1 TYPICAL PUMP JUNCTION BOX ELEVATION
NOT TO SCALE

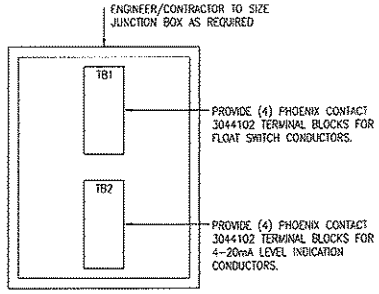

INTERIOR ELEVATION

DETAIL NOTES:

1. ALL TERMINAL BLOCKS SHALL BE PROVIDED WITH CORRESPONDING END BRACKETS AND END COVERS.
2. PROVIDE SEPARATE GROUND LUG IN EACH JUNCTION BOX, BONDED TO JUNCTION BOX.

A3 TYPICAL LEVEL INDICATION JUNCTION BOX ELEVATION
NOT TO SCALE

REVISIONS	BY

IMPROVEMENTS TO WASTEWATER COLLECTION SYSTEM

LIFT STATION CONSTRUCTION DETAILS

ELECTRICAL STANDARDS

FINAL SUBMITTAL

ECUA
EMERALD COAST UTILITIES AUTHORITY

APPROVED BY:

Drawn:	
Designed:	
Checked:	
Date:	MAY '13
Scale:	
Project No:	
Sheet No.	18
	Of 18 Sheets

ALL WORK SHALL BE CONSTRUCTED IN ACCORDANCE WITH THE LATEST EDITION OF THE E.C.U.A. STANDARD SPECIFICATIONS

240-208V 3ø 1HP - 20HP VARIABLE FREQUENCY DRIVE ELECTRICAL STANDARD

FOR

EMERALD COAST UTILITY AUTHORITY
ESCAMBIA COUNTY, FL

SHEET NO.	SHEET DESCRIPTION
1	MAIN POWER DISTRIBUTION SCHEMATIC
2	CONTROL SCHEMATIC
3	DIGITAL INPUTS SCHEMATIC
4	DIGITAL OUTPUTS & ANALOG INPUTS SCHEMATIC
5	ANALOG OUTPUTS & STARTER CONTROL SCHEMATIC
6	TERMINAL BLOCK LAYOUT AND FIELD CONNECTIONS
7	LINEAR EXTERIOR PANEL LAYOUT & FIELD CONDUIT REQUIREMENTS
8	POWER & PUMP 1 INTERNAL PANEL LAYOUTS
9	PUMP 2 & CONTROL PANEL INTERNAL LAYOUTS
10	EQUIPMENT LIST
11	HORSEPOWER RELATED EQUIPMENT & POWER CONDUCTORS
12	PANEL TO PANEL CONDUCTORS & EQUIPMENT
13	PANEL TO PANEL WIRING
14	LINEAR STAINLESS STEEL FRAME LAYOUT
15	TABLES, LEGENDS & TAGS
16	ISR INSTRUCTIONS
17	GENERAL NOTES AND DETAILS
18	GENERAL NOTES AND DETAILS

REVISIONS	BY

IMPROVEMENTS TO WASTEWATER COLLECTION SYSTEM
LIFT STATION CONSTRUCTION DETAILS
ELECTRICAL STANDARDS
FINAL SUBMITTAL

EMERALD COAST UTILITIES AUTHORITY

APPROVED BY:

Drawn:
Designed:
Checked:
Date: MAY '13
Scale:
Project No:
Sheet No. 0
OF 18 Sheets

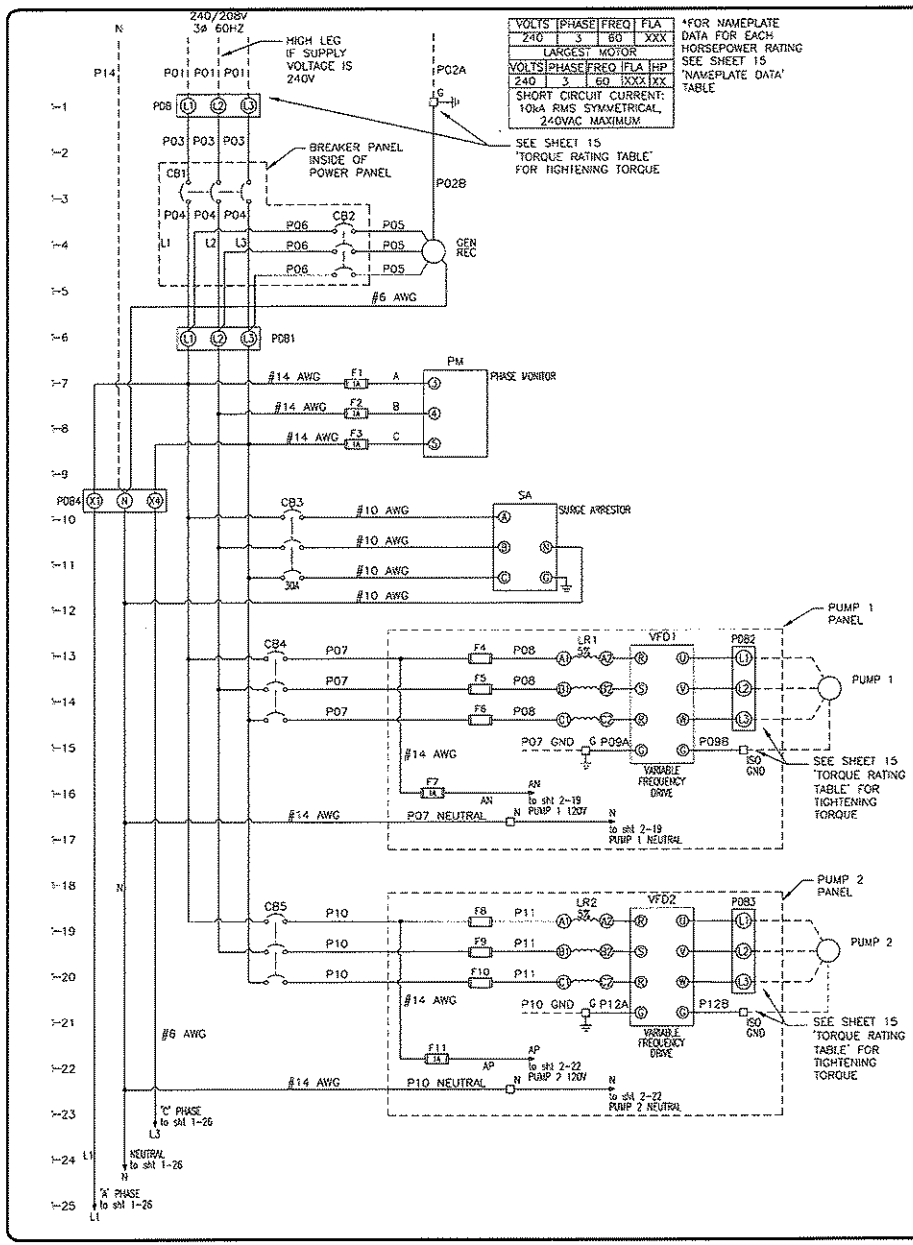

VOLTS	PHASE	FREQ	FLA
240	3	60	XXX
LARGEST MOTOR			
VOLTS	PHASE	FREQ	FLA	HP
240	3	60	XXX	XX
SHORT CIRCUIT CURRENT: 10kA RMS SYMMETRICAL, 240VAC MAXIMUM.			

*FOR NAMEPLATE DATA FOR EACH HORSEPOWER RATING SEE SHEET 15 'NAMEPLATE DATA' TABLE

ALL WORK SHALL BE CONSTRUCTED IN ACCORDANCE WITH THE LATEST EDITION OF THE E.C.U.A. STANDARD SPECIFICATIONS

NOTES:

1. THE COMPLETED CONTROL PANEL SHALL BE LABELED AND MANUFACTURED TO MEET U.L. 508A AND 698A CERTIFICATION.
2. CONTROL PANEL WIRING SHALL BE STRANDED COPPER, MINIMUM SIZE #16 AWG WITH 600V 90DEGREE C TYPE THHN INSULATION.
3. CONTROL PANEL WIRING SHALL BE NUMBERED AT BOTH ENDS WITH TYPE WRITTEN, HEAT SHRINKABLE WIRE MARKERS.
4. ALL WIRING WITHIN THE CONTROL PANEL SHALL BE COLOR CODED OR CODED USING ELECTRICAL TAPE IN SIZES WHERE COLORED INSULATION IS NOT AVAILABLE. THE FOLLOWING CODING SHALL BE USED:
   - 4.1. UNGROUNDED AC CONDUCTORS AT SUPPLY VOLTAGE – BLACK
   - 4.2. GROUNDED AC CURRENT CARRYING CONDUCTORS – WHITE
   - 4.3. UNGROUNDED AC CONDUCTORS BELOW SUPPLY VOLTAGE – RED
   - 4.4. UNGROUNDED AC CONTROL CONDUCTORS & CONDUCTORS THAT REMAIN ENERGIZED WHEN THE MAIN DISCONNECT IS OFF – YELLOW
   - 4.5. UNGROUNDED DC CONTROL CONDUCTORS – ORANGE
   - 4.6. GROUNDED DC CURRENT CARRYING CONDUCTORS – BROWN
   - 4.7. INTRINSICALLY SAFE WIRING – BLUE
   - 4.8. GROUND CONDUCTORS – GREEN
5. SEE SHEETS 11 & 12 FOR DETAILS REGARDING ALL POWER CONDUCTORS LABELED PXX.
6. SEE SHEET 11 'HORSEPOWER RELATED COMPONENTS EQUIPMENT LIST' FOR RATINGS OF OVERCURRENT PROTECTION DEVICES.

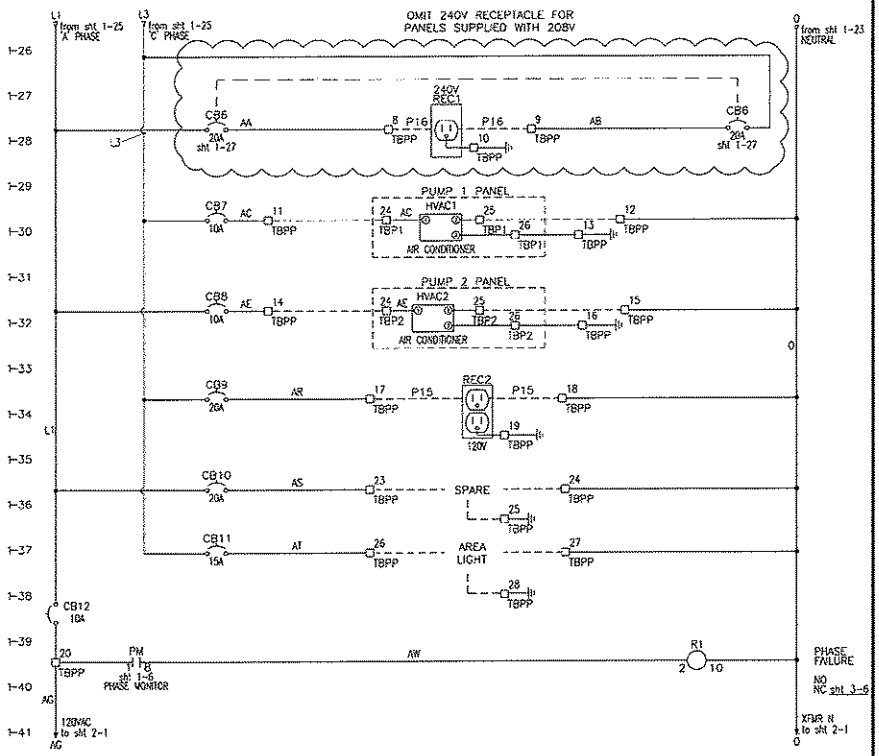

REVISIONS	BY

IMPROVEMENTS TO WASTEWATER COLLECTION SYSTEM

LIFT STATION CONSTRUCTION DETAILS

ELECTRICAL STANDARDS

FINAL SUBMITTAL

EMERALD COAST UTILITIES AUTHORITY

APPROVED BY:

Drawn:	
Designed:	
Checked:	
Date:	MAY '13
Scale:	
Project No:	
Sheet No.	1
	OF 18 Sheets

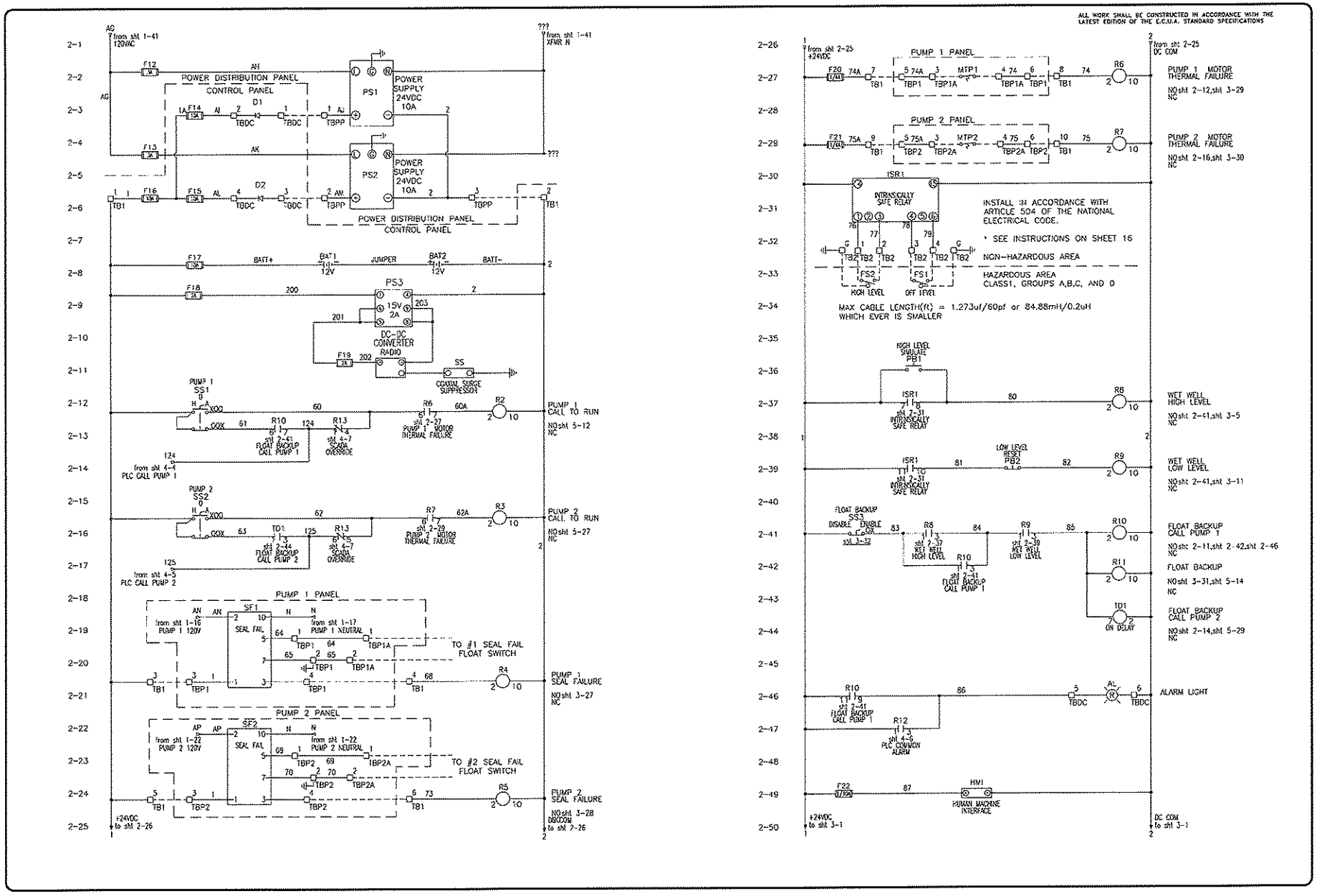

REVISIONS	BY

IMPROVEMENTS TO WASTEWATER COLLECTION SYSTEM

LIFT STATION CONSTRUCTION DETAILS

ELECTRICAL STANDARDS

FINAL SUBMITTAL

EMERALD COAST UTILITIES AUTHORITY

APPROVED BY:

Drawn	
Designed	
Checked	
Date	MAY '13
Scale	
Project No	
Sheet No.	2
	OF 18 Sheets

ALL WORK SHALL BE CONSTRUCTED IN ACCORDANCE WITH THE LATEST EDITION OF THE E.C.U.A. STANDARD SPECIFICATIONS

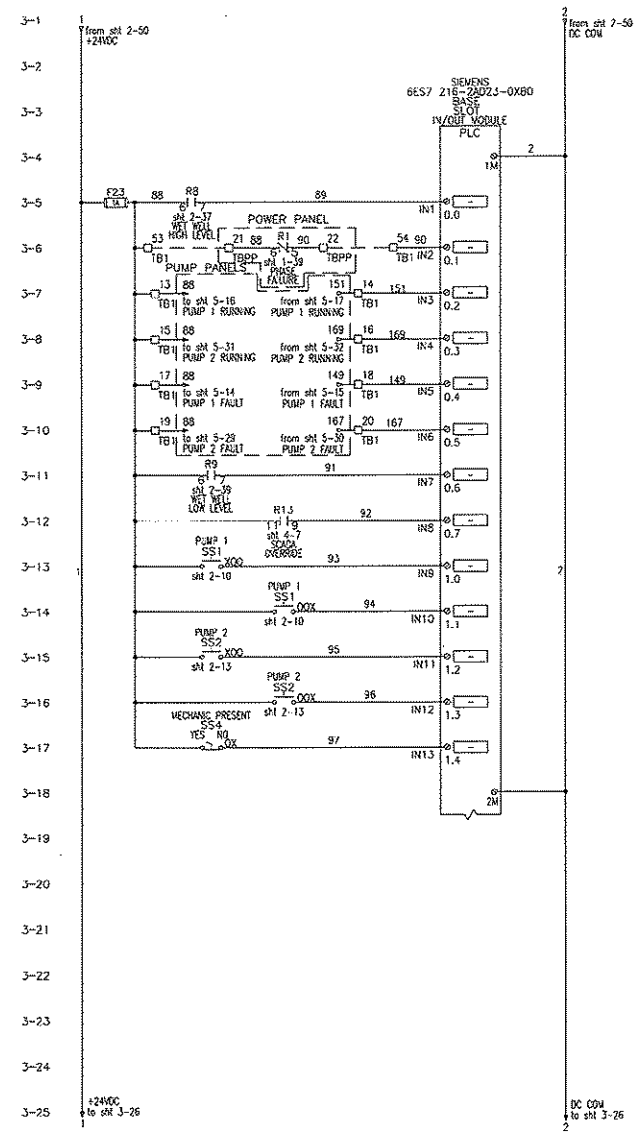

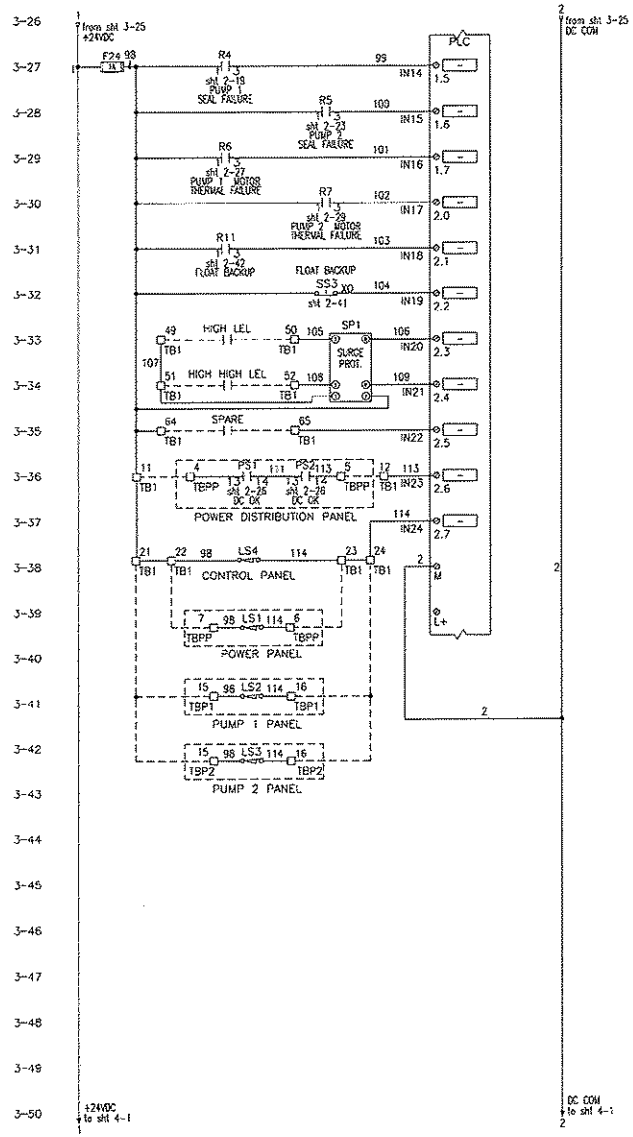

REVISIONS	BY

IMPROVEMENTS TO WASTEWATER COLLECTION SYSTEM

LIFT STATION CONSTRUCTION DETAILS

ELECTRICAL STANDARDS

FINAL SUBMITTAL

EMERALD COAST UTILITIES AUTHORITY

APPROVED BY:

Drawn:	
Designed:	
Checked:	
Date:	MAY '13
Scale:	
Project No:	
Sheet No.	3
	OF 18 Sheets

ALL WORK SHALL BE CONSTRUCTED IN ACCORDANCE WITH THE LATEST EDITION OF THE E.C.U.A. STANDARD SPECIFICATIONS

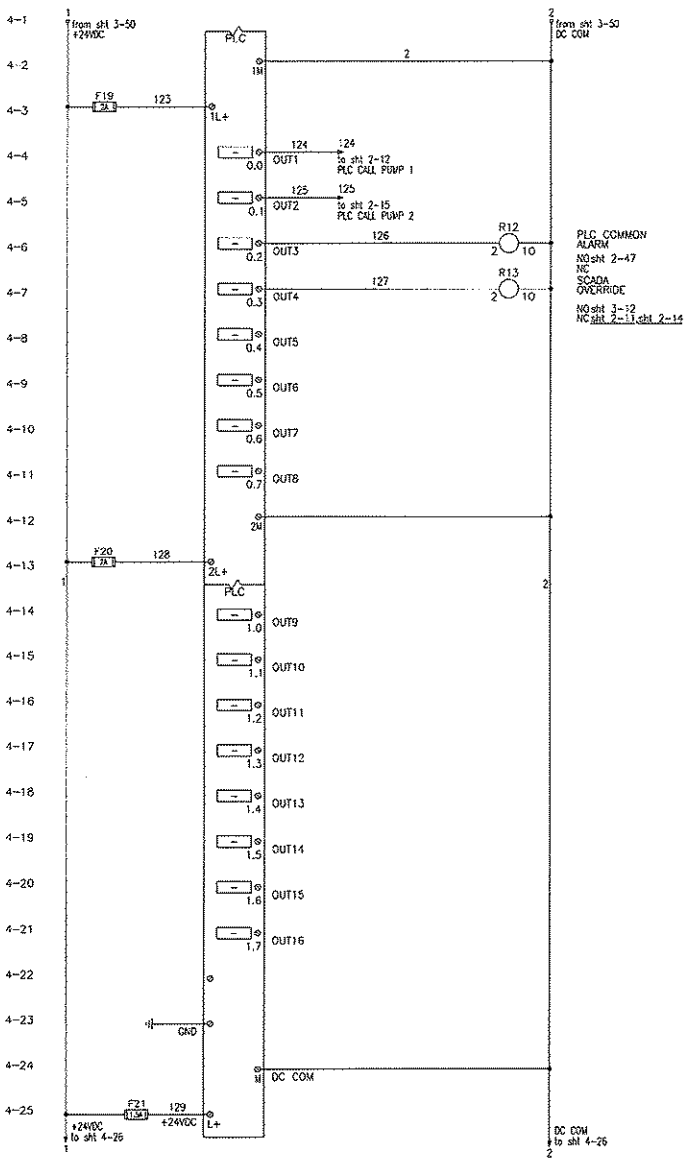

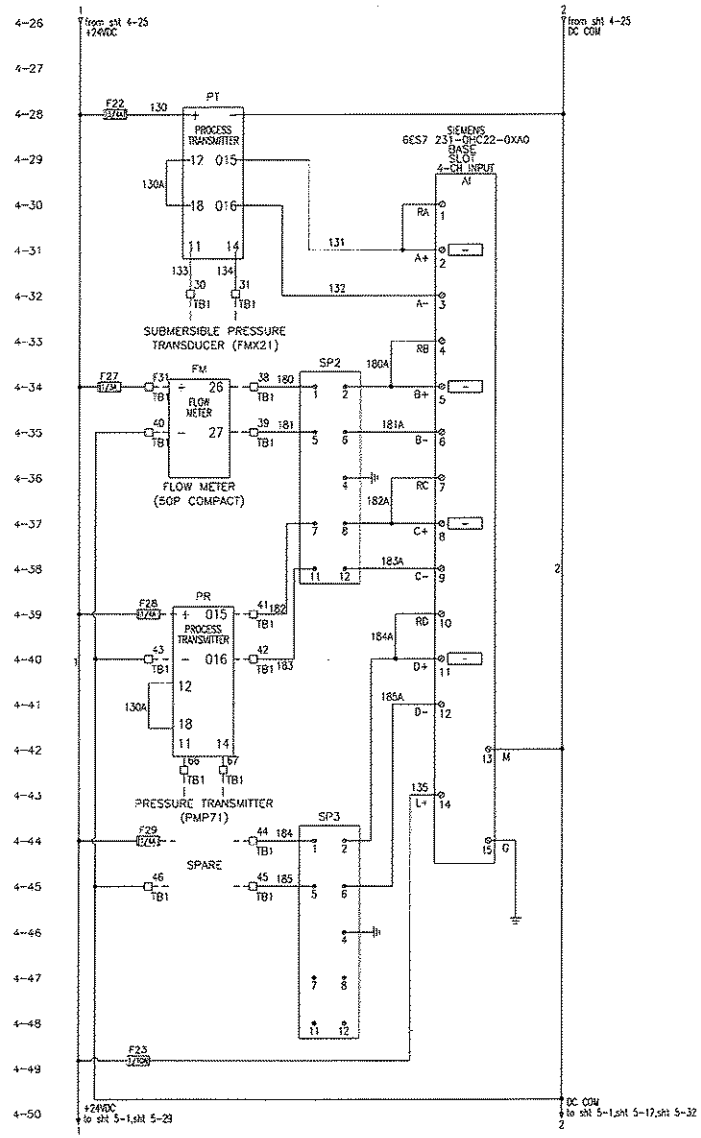

REVISIONS	BY

IMPROVEMENTS TO WASTEWATER COLLECTION SYSTEM

LIFT STATION CONSTRUCTION DETAILS

ELECTRICAL STANDARDS

FINAL SUBMITTAL

EMERALD COAST UTILITIES AUTHORITY

APPROVED BY:

Drawn	
Designed	
Checked	
Date	MAY '13
Tester	
Project No	
Sheet No.	4
OF	18 Sheets

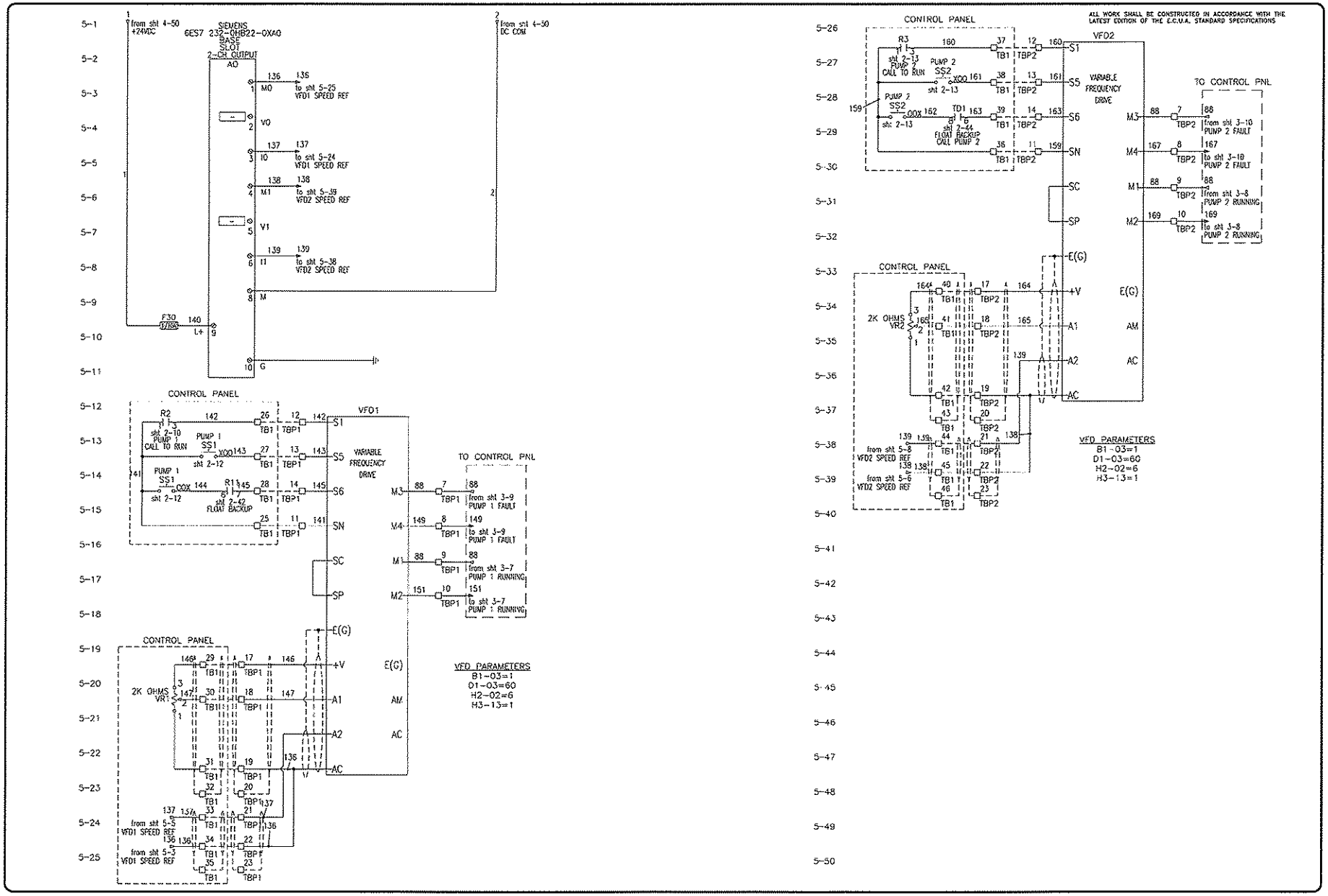

REVISIONS	BY

IMPROVEMENTS TO WASTEWATER COLLECTION SYSTEM

LIFT STATION CONSTRUCTION DETAILS

ELECTRICAL STANDARDS

FINAL SUBMITTAL

EMERALD COAST UTILITIES AUTHORITY

APPROVED BY:

Drawn:	
Designed:	
Checked:	
Date:	MAY '13
Scale:	
Project No:	
Sheet No.	5
	OF 18 Sheets

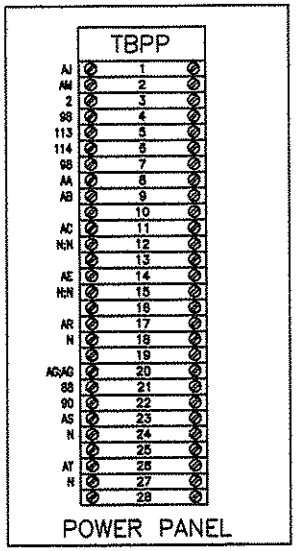

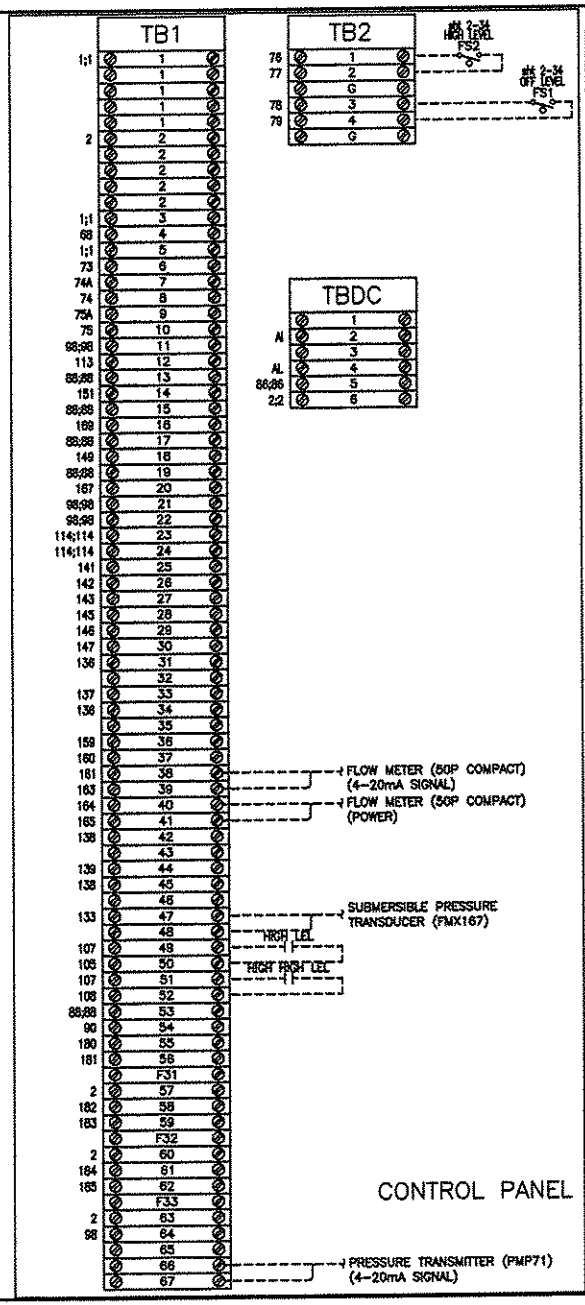

ALL WORK SHALL BE CONSTRUCTED IN ACCORDANCE WITH THE LATEST EDITION OF THE ECUA STANDARD SPECIFICATIONS

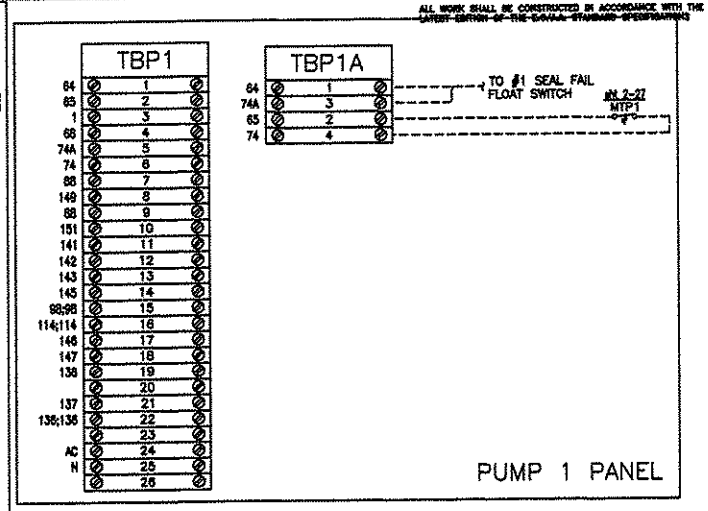

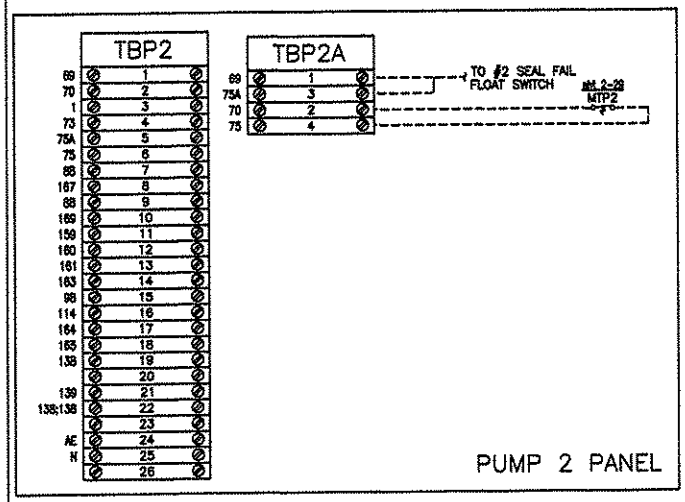

TYPICAL FOR ALL TERMINAL BLOCKS ON THIS DRAWING

USE COPPER CONDUCTORS ONLY
75 DEG C (167 DEG F)
5.3-7.0 LB/IN TIGHTENING TORQUE

NOTES:

TERMINAL BLOCK DESIGNATIONS:

- TBPP – POWER PANEL TERMINAL BLOCK
- TB1 – CONTROL PANEL TERMINAL BLOCK
- TB2 – INTRINSICALLY SAFE TERMINAL BLOCK
- TBP1 – PUMP 1 TERMINAL BLOCK
- TBP1A – PUMP 1 TERMINAL BLOCK (MOTOR THERMAL AND SEAL FAILURE)
- TBP2 – PUMP 2 TERMINAL BLOCK
- TBP2A – PUMP 2 TERMINAL BLOCK (MOTOR THERMAL AND SEAL FAILURE)

REVISIONS	BY

IMPROVEMENTS TO WASTEWATER COLLECTION SYSTEM

LIFT STATION CONSTRUCTION DETAILS

ELECTRICAL STANDARDS

FINAL SUBMITTAL

EMERALD COAST UTILITIES AUTHORITY

APPROVED BY:

Drawn	
Designed	
Checked	
Date	MAY '13
Scale	
Project No	
Sheet No.	6
	OF 18 Sheets

ALL WORK SHALL BE CONSTRUCTED IN ACCORDANCE WITH THE LATEST EDITION OF THE E.C.U.A. STANDARD SPECIFICATIONS

NOTES

1. SEE SHEET 15 FOR SCHEDULES, LEGENDS AND PANEL TAGS.

ATTENTION

THIS LAYOUT IS ONE OF TWO (2) POSSIBLE CHOICES – SEE SHEET 7A FOR THE OTHER OPTION. IF THIS LAYOUT OPTION IS SELECTED, SEE SHEET 14 FOR ASSOCIATED RACK DETAILS.

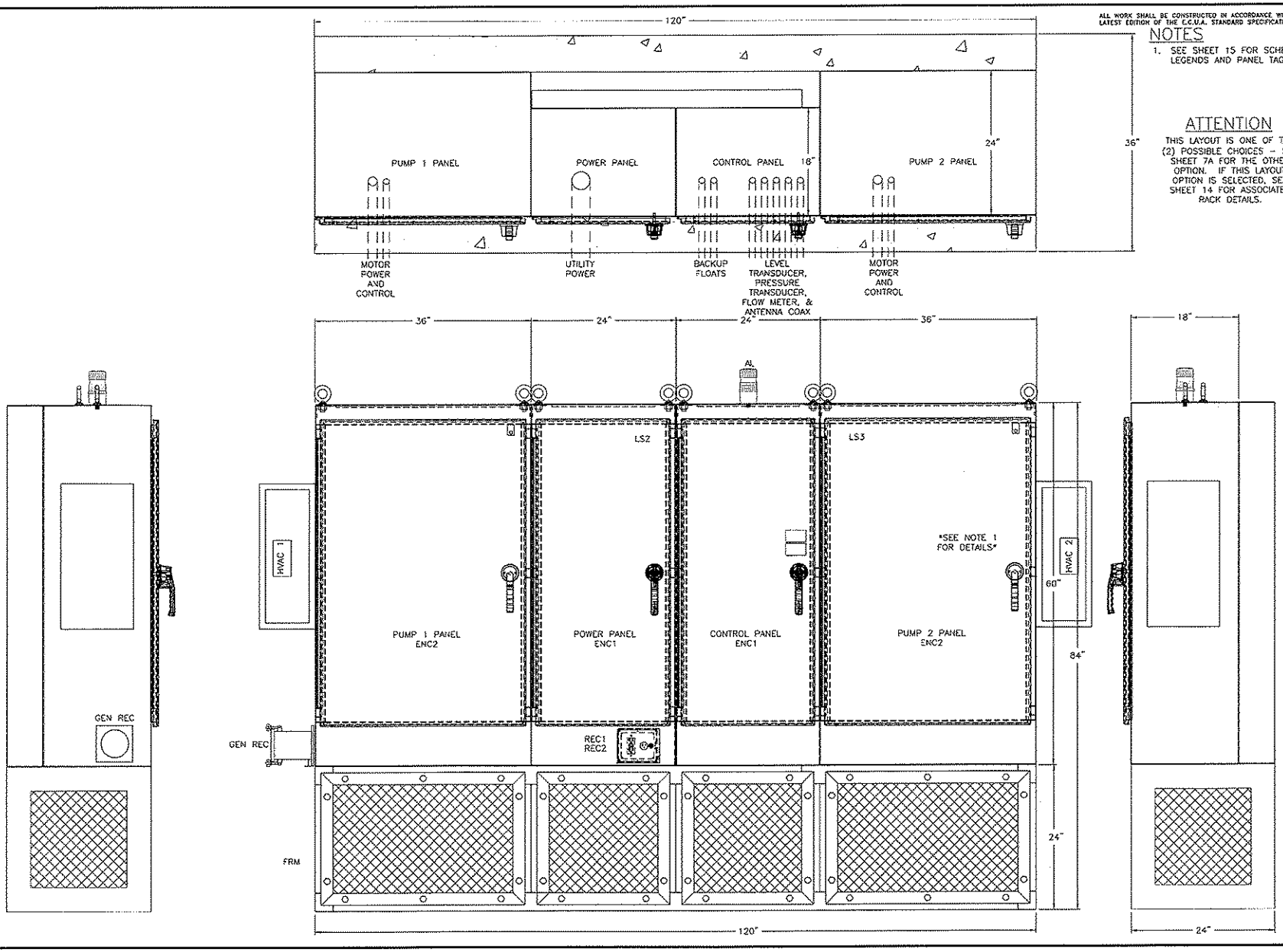

REVISIONS	BY

IMPROVEMENTS TO WASTEWATER COLLECTION SYSTEM

LIFT STATION CONSTRUCTION DETAILS

ELECTRICAL STANDARDS

FINAL SUBMITTAL

EMERALD COAST UTILITIES AUTHORITY

APPROVED BY:

Drawn:	
Designed:	
Checked:	
Date:	MAY '13
Scale:	
Project No:	
Sheet No.	7
	OF 18 Sheets

ALL WORK SHALL BE CONSTRUCTED IN ACCORDANCE WITH THE LATEST EDITION OF THE E.C.U.A. STANDARD SPECIFICATIONS

NOTES

1. SEE SHEET 15 FOR SCHEDULES, LEGENDS AND PANEL TAGS.
2. LAYOUT OF THE POWER & VFD SECTIONS DEPICTS THE LARGEST POSSIBLE HORSEPOWER CONFIGURATION.

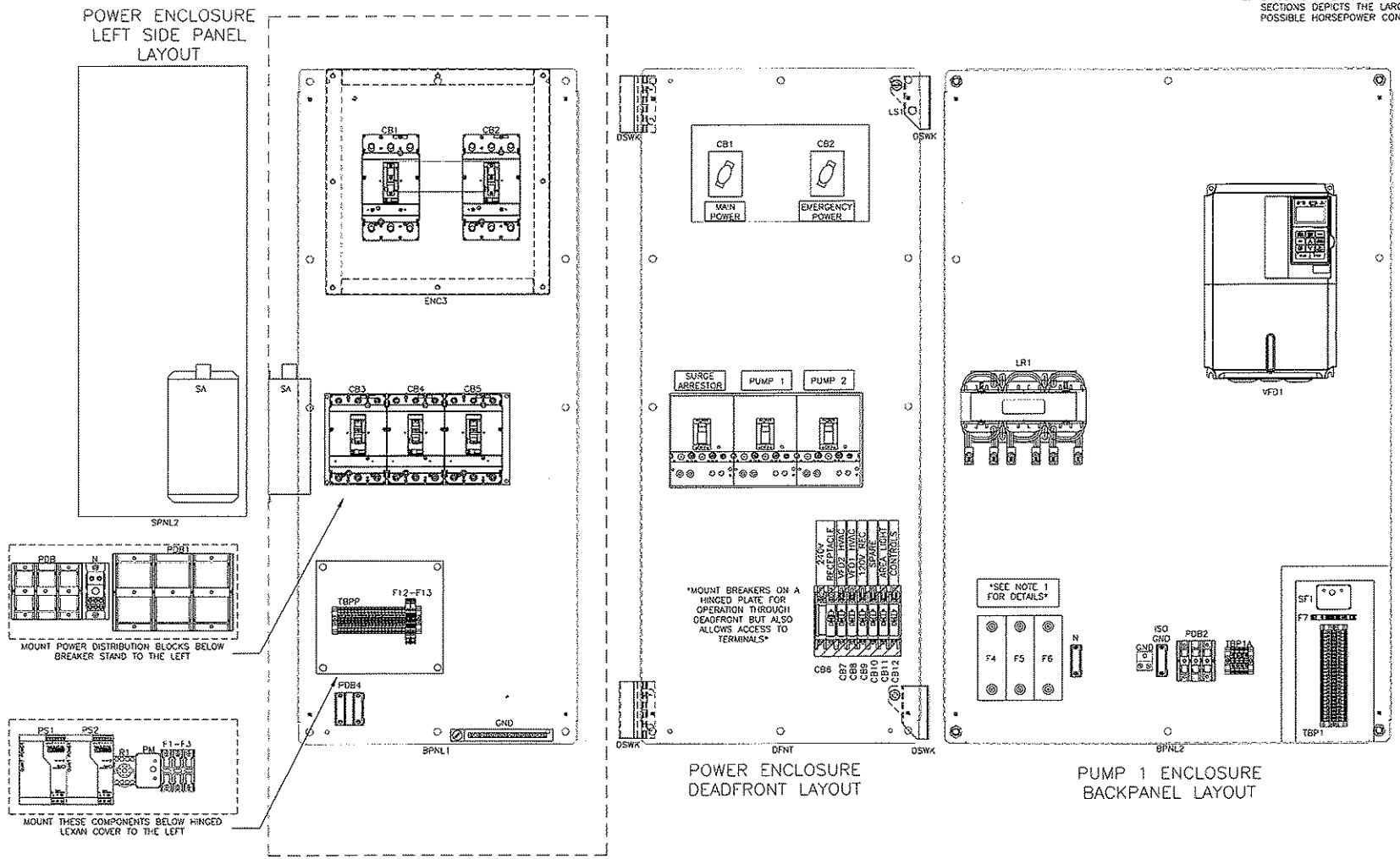

REVISIONS	BY

IMPROVEMENTS TO WASTEWATER COLLECTION SYSTEM

LIFT STATION CONSTRUCTION DETAILS

ELECTRICAL STANDARDS

FINAL SUBMITTAL

EMERALD COAST UTILITIES AUTHORITY

APPROVED BY:

Drawn	
Designed	
Checked	
Date	MAY '13
Scale	
Project No.	
Sheet No.	8
	OF 18 Sheets

ALL WORK SHALL BE CONSTRUCTED IN ACCORDANCE WITH THE LATEST EDITION OF THE E.C.U.A. STANDARD SPECIFICATIONS

NOTES

1. SEE SHEET 15 FOR SCHEDULES, LEGENDS AND PANEL TAGS.
2. LAYOUT OF THE VFD SECTION DEPICTS THE LARGEST POSSIBLE HORSEPOWER CONFIGURATION.

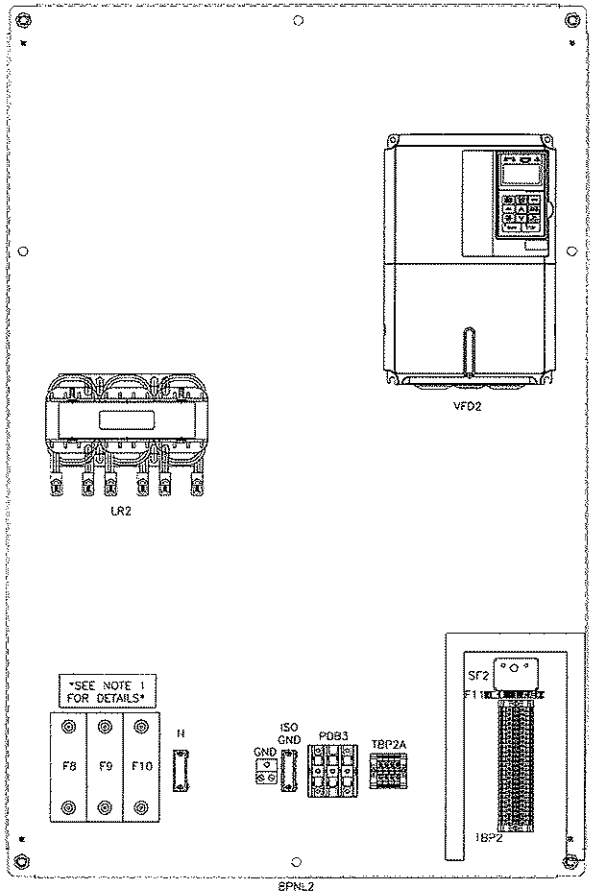

PUMP 2 ENCLOSURE BACKPANEL LAYOUT

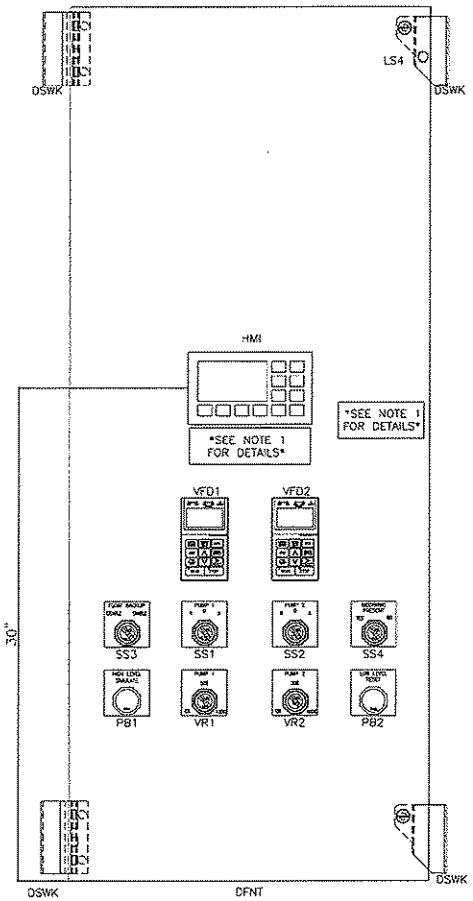

CONTROL PANEL DEADFRONT LAYOUT

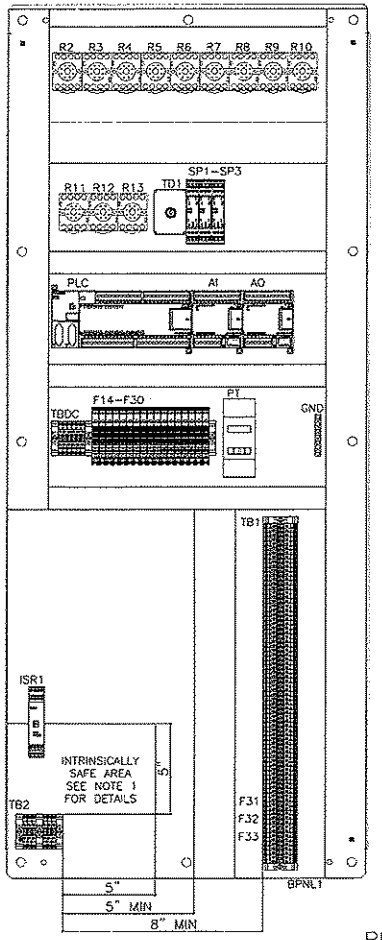

CONTROL ENCLOSURE BACKPANEL LAYOUT

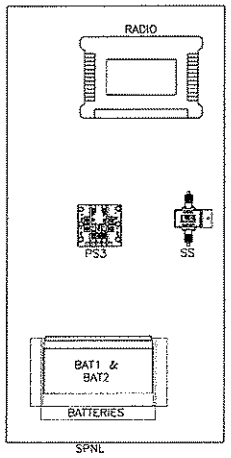

CONTROL ENCLOSURE RIGHT SIDEPANEL LAYOUT

REVISIONS	BY

IMPROVEMENTS TO WASTEWATER COLLECTION SYSTEM

LIFT STATION CONSTRUCTION DETAILS

ELECTRICAL STANDARDS

FINAL SUBMITTAL

EMERALD COAST UTILITIES AUTHORITY

APPROVED BY:

Drawn	
Designed	
Checked	
Date	MAY '13
Scale	
Project No.	
Sheet No.	9
	Of 18 Sheets

240-208V VFD Equipment List

Item	Tag	Panel	Description	Manufacturer	Model	Qty
1	ENC1	Power & Control	60X24X18 NEMA 4X SS Enclosure	Hoffman	A60241858SSN4	2
2	BPNL1	Power & Control	60x24 Painted Steel Backpanel	Hoffman	A60P24F1	2
3	ENC2	Pump 1 & 2	60X36X24 NEMA 4X SS Enclosure	Hoffman	A6036245SSFSN4	2
4	BPNL2	Pump 1 & 2	60x36 Painted Steel Backpanel	Hoffman	A60P36F1	2
5	SPNL	Control	28"H x 12"W Aluminum Sidepanel	EWS	Custom	1
6	DFNT	Power & Control	60x24 Aluminum Deadfront Panel	EWS	Custom	2
7	DSWK	Power & Control	Door Swing Kit	Hoffman	ANADFK	2
8	FRM	All	Expanded Metal Stainless Steel Frame 120x24x24	EWS	SEE DRAWINGS	1
9	PDB	Power	Incoming Power Distribution Block PDB	Square D	SEE HP TABLE SHEET 11	1
10	PDB	Power	Incoming Power Distribution Block PDB Cover	Square D	SEE HP TABLE SHEET 11	1
11	GND	Power	Power Panel Ground Bar	Square D	PK1GGTA-L	1
12	ENC3	Power	16"H x 16"W x 8"D Screw Cover Type 3R Enclosure	Hoffman	A16168OSC	1
13	CB1	Power	600V Main Circuit Breaker	Square D	SEE HP TABLE	1
14	CB2	Power	600V Emergency Circuit Breaker	Square D	SEE HP TABLE	1
15	CB1,CB2	Power	Mechanical Interlock for H/J Frame Circuit Breakers	Square D	529369	1
16	CB1,CB2	Power	Door Mounted Rotary Handle for H/J Frame Circuit Breakers	Square D	529338	2
17	GEN REC	Power	NEMA 4X Generator Receptacle	Appleton	SEE HP TABLE SHEET 11	1
18	GEN REC	Power	NEMA 4X Generator Plug (Ship Loose)	Appleton	SEE HP TABLE SHEET 11	1
19	PDB1	Power	Main Power Distribution Block PDB1	Square D	SEE HP TABLE SHEET 11	1
20	PDB1	Power	Main Power Distribution Block PDB1 Cover	Square D	SEE HP TABLE SHEET 11	1
21	F1-F3	Power	3 Pole Rejection type Fuse Block	Bussmann	BC6033PQ	3
22	F1-F3	Power	1A Rejection Type Fuse, Class CC	Bussmann	KTK-R-1	3
23	F1-F3	Power	Fuse Cover	Bussmann	SAMI-7N	3
24	PM	Power	240V Phase Monitor	Timemark	2578	1
25	PM	Power	600V, 8-Pin Relay Base	ABB	OTOBPC	1
26	CB3-CB5	Power	Breaker Stand	EWS	Custom	1
27	CB3	Power	30A 600V 3 Pole Circuit Breaker, Main Surge Arrestor	Square D	HDL36030	1
28	SA	Power	Main Surge Arrestor	SSI	SEE HP TABLE SHEET 11	1
29	CB4, CB5	Power	600V 3 Pole Circuit Breaker, VFD	Square D	SEE HP TABLE SHEET 11	2
30	CB4, CB5	Power	H & J Frame Circuit Breaker Locking System	Square D	529371	2
31	F4-F6, F8-F10	Pump 1 & 2	Semiconductor Fuse	Ferraz Shawmut	SEE HP TABLE SHEET 11	6
32	F4-F6, F8-F10	Pump 1 & 2	Semiconductor Fuse Block	Ferraz Shawmut	SEE HP TABLE SHEET 11	6
33	LR1, LR2	Pump 1 & 2	5% Line Reactor	MTE	SEE HP TABLE SHEET 11	2
34	VFD1, VFD2	Pump 1 & 2	Variable Frequency Drive	Yaskawa	SEE HP TABLE SHEET 11	2
35	VFD1, VFD2	Control	Remote Operator Kit for Yaskawa P7 VFD	Yaskawa	UUX000644	2
36	GND	Pump 1 & 2	Panel to Panel Ground Lug	NSI	2-DT	2
37	PDB2, PDB3	Pump 1 & 2	Motor Power Distribution Block PDB2&3, (1)#14-2/0.....(1)#14-2/0	Square D	9080LBA362101	2
38	PDB2, PDB3	Pump 1 & 2	Motor Power Distribution Block PDB2&3 Cover	Square D	9080LB23	2
39	CB6-CB11	Power	Hinged Aluminum Bracked for Mounting 240/120V Circuit Breakers through Deadfront	EWS	Custom	1
40	PDB4	Power	240V/120V Power Distribution Block, (1) #14-2 ... (4) #18-10	Square D	9080LBA361104	1
41	CB6	Power	20A, 240V, 2 Pole Circuit Breaker *Omit for 208V Supply Panels	Square D	QOU220	1
42	REC1	Power	20A, 250V, 6-20R Receptacle *Omit for 208V Supply Panels	P&S	5872I	1
43	HVAC1, HVAC2	Pump 1 & 2	120V NEMA 4X Air Conditioner	Iceqube	SEE HP TABLE SHEET 11	2
44	CB10	Power	20A, 120V 1 Pole Circuit Breaker	Square D	QOU120	2
45	REC2	Power	120V 20A GFCI Duplex Receptacle NEMA5-20R	P&S	2094-I	1
46	REC1, REC2	Power	Custom Receptacle Cover NEMA 4X S.S.	HOFFMAN	HIDRPSS-MOD	1
47	REC1, REC2	Power	3/4 1G AL FD BOX	Appelton	4CS-1/2	2
48	CB7, CB8, CB12	Power	10A, 120V, 1 Pole Circuit Breaker	Square D	QOU110	3
49	CB11	Power	15A, 120V, 1 Pole Circuit Breaker	Square D	QOU115	1
50	R1	Power	120V 3PDT General Purpose Relay w/ Indicator Lamp	Potter Brumfield	KRPA-14AN-120	1
51	R1-R13, SF1, SF2	All	11 Pin Relay Base	ABB	NDS-11	15
52	F7, F11-F13	Pump 1, 2 & Power	Fused Terminal Block w/ 120V Blown Fuse Indication	Allen Bradley	1492-H4	4
53	-	Power & Control	1492-H4 &H5 Fused Terminal Block End Cover	Allen Bradley	1492-N37	4
54	F12, F13	Power	3A Fuse, Power Supply Primary	Bussmann	AGC-3	2
55	PS1, PS2	Power	10A 24VDC Power Supply	Phoenix Contact	2938604	2
56	D1, D2	Power	10A Diode, P1000A	Newark	S1R7094	2
57	-	Power	Custom Stand/Lexan Hinged Cover w/Alum Stand for TBPP & Power Supply Fuses	EWS	Custom	1
58	F14-F30	Control	Fused Terminal Block w/ 24VDC Blown Fuse Indication	Allen Bradley	1492-H5	17
59	F14 - F17	Control	10A Fuse, Power Supply Secondary & Batteries	Bussmann	AGC-10	4
60	BAT1, BAT2	Control	12VDC Battery	Power Sonic	PS1290	2
61	PS3	Control	24VDC-15VDC Converter, 2A	Vicor	V1-J12-EY-B1	1
62	N	Power	Incoming Neutral Block	Square D	9080LBA163206	1
63	N	Power	Incoming Neutral Block, Cover	Square D	9080LB31	1

240-208V VFD Equipment List

ALL WORK SHALL BE CONSTRUCTED IN ACCORDANCE WITH THE LATEST EDITION OF THE C.E.O.U.A. STANDARD SPECIFICATIONS

Item	Tag	Panel	Description	Manufacturer	Model	Qty
64	RADIO	Control	400MHz Radio	GE MDS	SD04MD	1
65	RADIO	Control	DB9 Male/Male Gender Changer	Office Depot	966660	1
66	RADIO/SS	Control	3 Foot LMR400UF Coaxial Jumper NMale to TNCMale	Tessco	324503	1
67	SS	Control	Coaxial Surge Suppressor, 50-700MHz	Polyphaser	IS-50NX-C1	1
68	-	-	50FT Coaxial Cable, NMale-Nmale, Wireless Solutions 400-07-07-P50 (Ship Loose)	Tessco	370875	1
69	-	-	400MHz Yagi Antenna w/ N Female Connector, MAXRAD MYA450GN (Ship Loose)	Tessci	37634	1
70	-	-	Antenna Tower 5' Base Section, ROHN R-SB25GS (Ship Loose)	Tessco	64559	1
71	-	-	Antenna Tower 10' Mid Section, ROHN R-25G (Ship Loose)	Tessco	56866	1
72	-	-	Antenna Tower 9' Top Section, ROHN R-25AG2 (Ship Loose)	Tessco	70080	1
73	-	-	21' 1-1/4" S.S. Antenna Mast (Ship Loose)	Bell Steel	023008	1
74	F20, F21	Control	1/4A Fuse, Motor Thermal Inputs	Bussmann	AGC-1/4	2
75	F18, F19, F25, F26	Control	2A Fuse, Radio Power Supply, Radio & Digital Outputs	Bussmann	AGC-2	4
76	SS1, SS2	Control	3 Position Selector Switch, 30MM	Square D	9001SK543BH2	2
77	R2-R13	Control	24VDC 3PDT General Purpose Relay w/ Indicator Lamp	Potter Brumfield	KRPA-14DN-24	12
78	SF1, SF2	Control	120V Seal Failure Relay	ATC	SPM-120-AAA-10K	2
79	ISR1	Control	Intrinsically Safe Barrier Relay, 24VDC	Pepperl & Fuchs	KFD2-SR2-Ex2.W	1
80	TB2	Control	Terminal Block, Blue TB2	Phoenix Contact	3044115	4
81	TB2	Control	Terminal Block, Blue End Barrier, TB2	Phoenix Contact	3047235	1
82	TB2	Control	Ground Terminal Blocks, TB2	Phoenix Contact	3044128	2
83	PB1, PB2	Control	Push Button, Black 1NO 1NC	Square D	9001SKR1BH13	2
84	SS3, SS4	Control	2 Position Selector Switch, 30MM	Square D	9001SK511BH2	2
85	TD1	Control	24VDC 0-180 Second Time Delay Relay	Square D	RE48ATM12MW	1
86	TD1	Control	8 Pin Relay Base	ABB	NDS-8	1
87	AL	Control	24VDC Red Alarm Light	Federal Signal	LP3M-012-048R	1
88	F22, F29, F30	Control	1/10A Fuse, Analog Inputs, Analog Outputs & HMI	Bussmann	AGC-1/10	3
89	HMI	Control	TD400C Text Display	Siemens	6AV6 640-0AA00-0AX1	1
90	F23, F24	Control	1A Fuse, Digital Inputs	Bussmann	AGC-1	4
91	PLC	Control	S7-200 Dual Com Port Processor w/ 24 DI & 16 DO Points	Siemens	6ES7 216-2AD23-0XB0	1
92	AI	Control	S7-200 4 Point AI Module	Siemens	6ES7 231-0HC22-0XA0	1
93	AO	Control	S7-200 2 Point AO Module	Siemens	6ES7 232-0HB22-0XA0	1
94	PLC	Control	S7-200 Communication cable PC/PPI RS-232/485	Siemens	6ES7 901-3CB30-0XA0	1
95	SP1-SP3	Control	Plug in DI Surge Suppression, P7 4x1...DC	Phoenix Contact	2838322	3
96	SP1-SP3	Control	Terminal Block Base for Plugable Surge Supression, P7 4x1-BE	Phoenix Contact	2839363	3
97	LS1-LS4	Control	Panel Intrusion Switches, N.C. Contacts	NSI	76030P5	4
98	F27	Control	1-1/2A Fuse, PLC Supply	Bussmann	AGC-1-1/2	1
99	F28	Control	3/4A Fuse, Process Analyzer	Bussmann	AGC-3/4	1
100	PT	Control	Process Transmitter	Endress & Hauser	RMA42AAAH2	2
101	PT	-	Submersible Level Transducer, 20ft Range w/ 60ft Cable & Mounting Clamp (Ship Loose)	Endress & Hauser	FMX21-FE221GGE21APO	1
102	F31-F33	Control	24VDC Fused Terminal Block With Indication	Phoenix Contact	3046090	3
103	F31-F33	Control	1/4A Fuse, Analog Inputs	Bussmann	GMA-250	3
104	VR1, VR2	Control	2K Ohm Potentimeter	Square D	9001SK2139	2
105	TBPP,1,DC,P1, 1A,P2 & 2A	All	Terminal Block, Gray 26-10 AWG Wire	Phoenix Contact	3044102	161
106	TBPP,1,DC,P1, 1A,P2 & 2A	All	Terminal Block End Barrier	Phoenix Contact	3047028	8
107	TBPP,1,DC,P1, 1A,P2 & 2A	All	Terminal Block End Anchor	Phoenix Contact	0800886	17
108	TBP1A, TBP2A	Pump 1 & 2	Terminal Block, Gray 26-8 AWG Wire, TBVFD1A & TBVFD2A	Phoenix Contact	3044131	8
109	GND	Control	Control Panel Ground Bar	Square D	PK5GTA	1
110	VFD1, VFD2	Pump 1, 2 & Control	RJ45 Connector for non-sheilded CAT 6 Cable	Tessco	355847	4
111	-	-	Meter Socket (SHIP LOOSE)	Milbank	SEE HP TABLE SHEET 11	1
112	-	-	Stainless Steel 60' Float (SHIP LOOSE)	Anchor Scientific	P60NO-SST	2
113	-	-	Insulated Ground Neutral (SHIP LOOSE)	Square D	SN400LA	1
114	-	-	Ground Bar Kit (SHIP LOOSE)	Square D	PKDGTJ250	1
115	-	-	NEMA 4A S.S. Disconnect (SHIP LOOSE)	Square D	J250DS	1
116	-	-	Antenna Mast Stabilization Plate (Ship Loose)	EWS	Custom	1
117	-	-	Stainless Steel 'U' Bolt, 2" Pole, 5/16" Diameter Bolt w/ 2-1/2" Threads (SHIP LOOSE)			1
118	-	-	5/16" Stainless Steel Flat Washer for 'U' Bolt (SHIP LOOSE)			2
119	-	-	5/16" Stainless Steel Lock Washer for 'U' Bolt (SHIP LOOSE)			2
120	-	-	5/16" Stainless Steel Nut for 'U' Bolt (SHIP LOOSE)			2
121	-	-	Stainless Steel 'U' Bolt, 1/4" Diameter (SHIP LOOSE)			2
122	-	-	1/4" Stainless Steel 1/4" Nut for 'U' Bolt (SHIP LOOSE)			4
123	-	-	1-1/4" Reduction Bushing for Antenna Tower, ROHN R-TB50 (SHIP LOOSE)	Tessco	36882	1
124	PLC	Control	S7-200 Memory Module	Siemens	6ES7 2918GF230AX0	1
125	ISO GND	Pump 1 & 2	Motor Isolated Ground Lug	Square D	9080LBA161101	2
126	N	Pump 1 & 2	Neutral Block	Square D	9080LBA161104	2
127	SPNL2	Power	32"X12" Aluminum Sidepanel	EWS	Custom	1
128	FM	Control	Flow Meter	Endress & Hauser	50P Compact	1
129	PR	Control	Pressure Transmitter	Endress & Hauser	PMP71-AAC1PG1RAA	1

REVISIONS	BY

IMPROVEMENTS TO WASTEWATER COLLECTION SYSTEM

LIFT STATION CONSTRUCTION DETAILS

ELECTRICAL STANDARDS

FINAL SUBMITTAL

EMERALD COAST UTILITIES AUTHORITY

APPROVED BY:

Drawn	
Designed	
Checked	
Date	MAY '13
Scale	
Project No.	
Sheet No.	10

OF 18 Sheets

ALL WORK SHALL BE CONSTRUCTED IN ACCORDANCE WITH THE LATEST EDITION OF THE E.C.U.A. STANDARD SPECIFICATIONS

Horsepower Related Components Equipment List

Item	Tag	Horsepower 1	2	3	5	7.5	10	15	20
Incoming Power Distribution Block	PDB	9080LBA362101	9080LBA362101	9080LBA362101	9080LBA362101	9080LBA362101	9080LBA363101	9080LBA363101	9080LBA363101
Incoming Power Distribution Block Cover	PDB	9080LB23	9080LB23	9080LB23	9080LB23	9080LB23	9080LB33	9080LB33	9080LB33
Main Circuit Breaker	CB1	HDL36070	HDL36070	HDL36080	HDL36100	HDL36125	HDL36175	HDL36200	JDL36225
Emergency Circuit Breaker	CB2	HDL36070	HDL36070	HDL36080	HDL36100	HDL36125	HDL36175	HDL36200	JDL36200
Generator Receptacle	GEN REC	ADR1044-RS	ADR1044-RS	ADR1044-RS	ADR1044-RS	AR20044RS	AR20044RS	AR20044RS	AR20044RS
Generator Plug (Ship Loose)	GEN REC	ACP1044CD-RS	ACP1044CD-RS	ACP1044CD-RS	ACP1044CD-RS	AP20044E-RS	AP20044E-RS	AP20044E-RS	AP20044E-RS
Main Power Distribution Block	PDB1	9080LBA363206	9080LBA363206	9080LBA363206	9080LBA363206	9080LBA363206	9080LBA365208	9080LBA365208	9080LBA365208
Main Power Distribution Block Cover	PDB1	9080LB33	9080LB33	9080LB33	9080LB33	9080LB33	9080LB53	9080LB53	9080LB53
Surge Arrestor 208V	SA	SDLA3Y1	SDLA3Y1	SDLA3Y1	SDLA3Y1	SDLA3Y1	SDLA3Y1	SDLA3Y1	SDLA3Y1
Surge Arrestor 240V	SA	SDLA3D1	SDLA3D1	SDLA3D1	SDLA3D1	SDLA3D1	SDLA3D1	SDLA3D1	SDLA3D1
VFD Circuit Breaker	CB4, CB5	HDL36015	HDL36015	HDL36020	HDL36035	HDL36045	HDL36080	HDL36100	HDL36125
VFD Semiconductor Fuse	F4-F6, F10-F12	A70P10-1	A70P15-1	A70P20-1	A70P30-1	A70P50-4	A70P80-4	A70P80-4	A70P125-4
VFD Semiconductor Fuse Block	F4-F6, F10-F12	70316	70316	70316	70316	P243C	P243C	P243C	P266A
5% Line Reactor 208V	LR1, LR2	RL-00802	RL-01202	RL-01802	RL-02502	RL-03502	RL-05502	RL-08002	RL-10002
5% Line Reactor 240V	LR1, LR2	RL-00803	RL-00802	RL-01202	RL-01802	RL-03502	RL-03502	RL-05502	RL-08002
Variable Frequency Drive	VFD1, VFD2	CIMR-P7U20P7	CIMR-P7U21P5	CIMR-P7U22P2	CIMR-P7U23P7	CIMR-P7U25P5	CIMR-P7U27P5	CIMR-P7U2011	CIMR-P7U2015
Top Mount AC *Linear Layout Only*	HVAC1, HVAC2	IQ2000TXS-136	IQ2000TXS-136	IQ2000TXS-136	IQ2000TXS-136	IQ2000TXS-136	IQ2000TXS-136	IQ2500TXS-136	IQ2500TXS-136
Side Mount AC *Back-to-Back Layout Only*	HVAC1, HVAC2	IQ2000VS-136	IQ2000VS-136	IQ2000VS-136	IQ2000VS-136	IQ2000VS-136	IQ2000VS-136	IQ3000VS-136	IQ3000VS-136
Meter Socket	-	UAP9701-RRL	UAP9701-RRL	UAP9701-RRL	UAP9701-RRL	UAP9701-RRL	UAP9701-RRL	UAP3566-X-HSP	UAP3566-X-HSP

Horsepower Related Power Conductors, CGB's and Hubs

Conductor Tag		Horsepower 1	2	3	5	7.5	10	15	20
P-01, P-03 & P-04	Description	(3)#4	(3)#4	(3)#4	(3)#3	(3)#1	(3)#2/0	(3)#3/0	(3)#4/0
	Manufacturer	N/A	N/A	N/A	N/A	N/A	N/A	N/A	N/A
	Catalog #	N/A	N/A	N/A	N/A	N/A	N/A	N/A	N/A
	Length (Max Ft)	N/A	N/A	N/A	N/A	N/A	N/A	N/A	N/A
	Cable Dia (in)	0.324"	0.324"	0.324"	0.352"	0.446"	0.532"	0.584"	0.642"
	Appleton Connector	(3) -CG-3150	(3) -CG-3150	(3) -CG-3150	(3) -CG-3150	(3)-CG-3775	(3) -CG-5075	(3) -CG-5075	(3) -CG-6275
	Connector Range	0.312"-0.437"	0.312"-0.437"	0.312"-0.437"	0.312"-0.437"	0.375"-0.500"	0.500"-0.625"	0.500"-0.625"	0.625"-0.750"
	Meyers Hub	(3) 1/2" - STA-1	(3) 1/2" - STA-1	(3) 1/2" - STA-1	(3) 1/2" - STA-1	(3) 3/4" - STA-2	(3) 3/4" - STA-2	(3) 3/4" - STA-2	(3) 3/4" - STA-2
P-02A	Description	(1)#8	(1)#8	(1)#8	(1)#8	(1)#6	(1)#6	(1)#6	(1)#4
	Manufacturer	N/A	N/A	N/A	N/A	N/A	N/A	N/A	N/A
	Catalog #	N/A	N/A	N/A	N/A	N/A	N/A	N/A	N/A
	Length (Max Ft)	N/A	N/A	N/A	N/A	N/A	N/A	N/A	N/A
	Cable Dia (in)	0.216"	0.216"	0.216"	0.216"	0.254"	0.254"	0.254"	0.324"
	Appleton Connector	(1)-GC-1850	(1)-GC-1850	(1)-GC-1850	(1)-GC-1850	(1)-GC-1850	(1)-GC-1850	(1)-GC-1850	(1)-GC-3150
	Connector Range	0.187"-0.312"	0.187"-0.312"	0.187"-0.312"	0.187"-0.312"	0.187"-0.312"	0.187"-0.312"	0.187"-0.312"	0.312"-0.437"
	Hub	(1) 1/2" - STA-1	(1) 1/2" - STA-1	(1) 1/2" - STA-1	(1) 1/2" - STA-1	(1) 1/2" - STA-1	(1) 1/2" - STA-1	(1) 1/2" - STA-1	(1) 1/2" - STA-1
P-02B	Description	(1)#8	(1)#8	(1)#8	(1)#8	(1)#6	(1)#6	(1)#6	(1)#4
	Manufacturer	Southwire	Southwire	Southwire	Southwire	Southwire	Southwire	Southwire	Southwire
P-05 & P-06	Description	(3)#4	(3)#4	(3)#4	(3)#3	(3)#1	(3)#2/0	(3)#3/0	(3)#3/0
	Manufacturer	N/A	N/A	N/A	N/A	N/A	N/A	N/A	N/A
	Catalog #	N/A	N/A	N/A	N/A	N/A	N/A	N/A	N/A
	Length (Max Ft)	N/A	N/A	N/A	N/A	N/A	N/A	N/A	N/A
	Cable Dia (in)	0.324"	0.324"	0.324"	0.352"	0.446"	0.532"	0.584"	0.584"
	Appleton Connector	(3) -CG-3150	(3) -CG-3150	(3) -CG-3150	(3) -CG-3150	(3)-CG-3775	(3) -CG-5075	(3) -CG-5075	(3) -CG-5075
	Connector Range	0.312"-0.437"	0.312"-0.437"	0.312"-0.437"	0.312"-0.437"	0.375"-0.500"	0.500"-0.625"	0.500"-0.625"	0.500"-0.625"
	Hub	(3) 1/2" - STA-1	(3) 1/2" - STA-1	(3) 1/2" - STA-1	(3) 1/2" - STA-1	(3) 3/4" - STA-2	(3) 3/4" - STA-2	(3) 3/4" - STA-2	(3) 3/4" - STA-2
P-07 & P-10	Description	(3)#14 W/G, TC	(3)#14 W/G, TC	(3)#12 W/G, TC	(3)#10 W/G, TC	(3)#10 W/G, TC	(3)#8 W/G, TC	(3)#6 W/G, TC	(3)#4 W/G, TC
	Manufacturer	Houston Wire	Houston Wire	Houston Wire	Houston Wire	Houston Wire	Houston Wire	Houston Wire	Houston Wire
	Catalog #	HW151 1405	HW151 1405	HW151 1205	HW151 1005	HW151 1005	HW 154 00804	HW 154 00604	HW 154 00404
	Length (Max Ft)	19 FT	19 FT	19 FT	19 FT	19 FT	19 FT	19 FT	19 FT
	Cable Dia (in)	0.41"	0.41"	0.46"	0.58"	0.58"	0.61"	0.76"	0.97"
	Appleton Connector	(2) -CG-3150	(2) -CG-3150	(2) -CG-3750	(2) -CG-5050	(2) -CG-5050	(2) - CG-5075	(2) - CG-7575	(2) - CG-87100
	Connector Range	0.312"-0.437"	0.312"-0.437"	0.375"-0.500"	0.500"-0.625"	0.500"-0.625"	0.500"-0.625"	0.750"-0.875"	0.875"-1.000"
	Hub	(2) 1/2" - STA-1	(2) 1/2" - STA-1	(2) 1/2" - STA-1	(2) 1/2" - STA-1	(2) 1/2" - STA-1	(2) 3/4" - STA-2	(2) 3/4" - STA-2	(2) 1" - STA-3
P-08 & P-11	Description	(3)#14	(3)#14	(3)#12	(3)#10	(3)#10	(3)#8	(3)#6	(3)#4
	Manufacturer	Southwire	Southwire	Southwire	Southwire	Southwire	Southwire	Southwire	Southwire
P-09A & B, P-12A & B	Description	(1)#14	(1)#14	(1)#12	(1)#10	(1)#10	(1)#8	(1)#6	(1)#6
	Manufacturer	Southwire	Southwire	Southwire	Southwire	Southwire	Southwire	Southwire	Southwire

REVISIONS	BY

IMPROVEMENTS TO WASTEWATER COLLECTION SYSTEM

LIFT STATION CONSTRUCTION DETAILS

ELECTRICAL STANDARDS

FINAL SUBMITTAL

ECUA EMERALD COAST UTILITIES AUTHORITY

APPROVED BY:

Drawn:
Designed:
Checked:
Date: MAY '15
Scale:
Project No:
Sheet No. 11
OF 18 Sheets

ALL WORK SHALL BE CONSTRUCTED IN ACCORDANCE WITH THE LATEST EDITION OF THE E.C.U.A. STANDARD SPECIFICATIONS

Power & Control Conductors, CGB's and Hubs

Cable Number	Description	Manufacturer	Catalog Numer	Length (Max Ft)	Cable Diameter	Appleton Liquidtight Cable Connector	Connector Cable Range	Crouse-Hinds Myers Hub	From Panel/Enclosure	To Panel/Enclosure
P-14	(1)#8 AWG	N/A	N/A	AS REQ'D	N/A	N/A	N/A	N/A	Field	Power Panel
P-15	3-1/C #12 AWG	N/A	N/A	AS REQ'D	N/A	N/A	N/A	N/A	Power Panel	Power Panel
P-16	3-1/C #12 AWG	N/A	N/A	AS REQ'D	N/A	N/A	N/A	N/A	Power Panel	Power Panel
C-01	(16) #14 AWG, Tray Cable	Houston Wire & Cable	HW 151 01416	24 FT	0.68"	(2) - CG-6275	0.625"-0.750"	(2) 3/4" - STA-2	Power Panel	Control Panel
C-02	(5) #14 AWG, Tray Cable	Houston Wire & Cable	HW 151 01405	19 FT	0.41"	(2) - CG-3750	0.375"-0.500"	(2) 1/2" - STA-1	Power Panel	Pump 1 Panel
C-03	(16) #14 AWG, Tray Cable	Houston Wire & Cable	HW 151 01416	22 FT	0.68"	(2) - CG-6275	0.625"-0.750"	(2) 3/4" - STA-2	Pump 1 Panel	Control Panel
C-04	(16) #14 AWG, Tray Cable	Houston Wire & Cable	HW 151 01416	19 FT	0.68"	(2) - CG-6275	0.625"-0.750"	(2) 3/4" - STA-2	Control Panel	Pump 2 Panel
C-05	1 Triad #16 SH, Tray Cable	Houston Wire & Cable	HW 121 1601T	22 FT	0.35"	(2) - CG-3150	0.312"-0.437"	(2) 1/2" - STA-1	Pump 1 Panel	Control Panel
C-06	1 Pair #16 SH, Tray Cable	Houston Wire & Cable	HW 120 01601	22 FT	0.33"	(2) - CG-2575	0.250"-0.375"	(2) 3/4" - STA-2	Pump 1 Panel	Control Panel
C-07	1 Triad #16 SH, Tray Cable	Houston Wire & Cable	HW 121 1601T	19 FT	0.35"	(2) - CG-3150	0.312"-0.437"	(2) 1/2" - STA-1	Pump 2 Panel	Control Panel
C-08	1 Pair #16 SH, Tray Cable	Houston Wire & Cable	HW 120 01601	19 FT	0.33"	(2) - CG-2575	0.250"-0.375"	(2) 3/4" - STA-2	Pump 2 Panel	Control Panel
C-09	(5) #14 AWG, Tray Cable	Houston Wire & Cable	HW 151 01405	22 FT	0.41"	(2) - CG-3750	0.375"-0.500"	(2) 1/2" - STA-1	Power Panel	Pump 2 Panel
PUMP 1-PWR	Per Mfg Specs	N/A	N/A	N/A	N/A	CG Series based on Mfg Specs	N/A	STA Series based on Mfg Specs	Field (Pump 1)	Pump 1 Panel
PUMP 1-MTP	Per Mfg Specs	N/A	N/A	N/A	N/A	CG Series based on Mfg Specs	N/A	STA Series based on Mfg Specs	Field (Pump 1)	Pump 1 Panel
PUMP 1-SF	Per Mfg Specs	N/A	N/A	N/A	N/A	CG Series based on Mfg Specs	N/A	STA Series based on Mfg Specs	Field (Pump 1)	Pump 1 Panel
PUMP 2-PWR	Per Mfg Specs	N/A	N/A	N/A	N/A	CG Series based on Mfg Specs	N/A	STA Series based on Mfg Specs	Field (Pump 2)	Pump 2 Panel
PUMP 2-MTP	Per Mfg Specs	N/A	N/A	N/A	N/A	CG Series based on Mfg Specs	N/A	STA Series based on Mfg Specs	Field (Pump 2)	Pump 2 Panel
PUMP 2-SF	Per Mfg Specs	N/A	N/A	N/A	N/A	CG Series based on Mfg Specs	N/A	STA Series based on Mfg Specs	Field (Pump 2)	Pump 2 Panel
Float Switch 1	Float Switch Cable	BY OTHERS	N/A	N/A	0.56"	(1) - CG-5050	0.500"-0.625"	(1) 1/2" - STA-1	Field (Float Switch)	Control Panel
Float Switch 2	Float Switch Cable	BY OTHERS	N/A	N/A	0.56"	(1) - CG-5050	0.500"-0.625"	(1) 1/2" - STA-1	Field (Float Switch)	Control Panel
Pressure Xducer	Pressure Transducer Cable	BY OTHERS	N/A	N/A	0.35"	(1) - G-3150	0.312"-0.437"	(1) 1/2" - STA-1	Field (Float Switch)	Control Panel
Antenna COAX	Coaxial Cable	BY OTHERS	N/A	N/A	0.408"	(1) - CG-3750	0.375"-0.500"	(1) 1/2" - STA-1	Field (Antenna)	Control Panel
CAT5-1	Ethernet	BELDEN	7922A	19 FT	0.301"	(2) - CG-1850	0.187"-0.312"	(2) 1/2" - STA-1	Pump 1 Panel	Control Panel
CAT5-2	Ethernet	BELDEN	7922A	22 FT	0.301"	(2) - CG-1850	0.187"-0.312"	(2) 1/2" - STA-1	Pump 2 Panel	Control Panel

REVISIONS	BY

IMPROVEMENTS TO WASTEWATER COLLECTION SYSTEM

LIFT STATION CONSTRUCTION DETAILS

ELECTRICAL STANDARDS

FINAL SUBMITTAL

EMERALD COAST UTILITIES AUTHORITY

APPROVED BY:

Drawn:
Designed:
Checked:
Date: MAY '13
Scale:
Project No:
Sheet No. 12
OF 18 Sheets

NOTES:

ALL WORK SHALL BE CONSTRUCTED IN ACCORDANCE WITH THE LATEST EDITION OF THE E.C.U.A. STANDARD SPECIFICATIONS

1) ALL SPARE WIRE WILL BE CLEARLY LABELED WITH THE CABLE NUMBER & A SPARE DESIGNATION ON INDIVIDUAL WIRES (S1, S2, ETC...). THESE SPARES SHOULD BE ABLE TO REACH ALL TERMINAL BLOCKS IN THE PANEL.

2) SPARE CONDUCTORS SHOULD BE TRIMMED AND HEAT SHRINK SHOULD BE USED TO SECURE THE SPARE CONDUCTORS IN THE CABLE.

3) THE INNER CONNECTING CONDUCTORS BETWEEN THE PANELS ARE CODED AS FOLLOWS: THE FIRST GROUP OF CHARACTER IS THE WIRE NUMBER AND THE SECOND GROUP IS THE COLOR (I.E. 1(BK) SIGNIFIES THAT THE WIRE NUMBER IS 1 AND THE COLOR IS BLACK). WIRE COLOR CODE AS FOLLOWS: BK-BLACK, RD-RED, BU-BLUE, OR-ORANGE, YL-YELLOW, BN-BROWN. FOR COLORS THAT ARE DENOTED AS XX/YY, XX IS THE BASE COLOR AND YY IS THE SPIRAL STRIPE (I.E. RD/BK IS A RED WIRE WITH A BLACK SPIRAL STRIPE).

4) SEE SHEETS 11 AND 12 FOR PANEL TO PANEL INNER CONNECTING CONDUCTOR AND CABLE DETAILS.

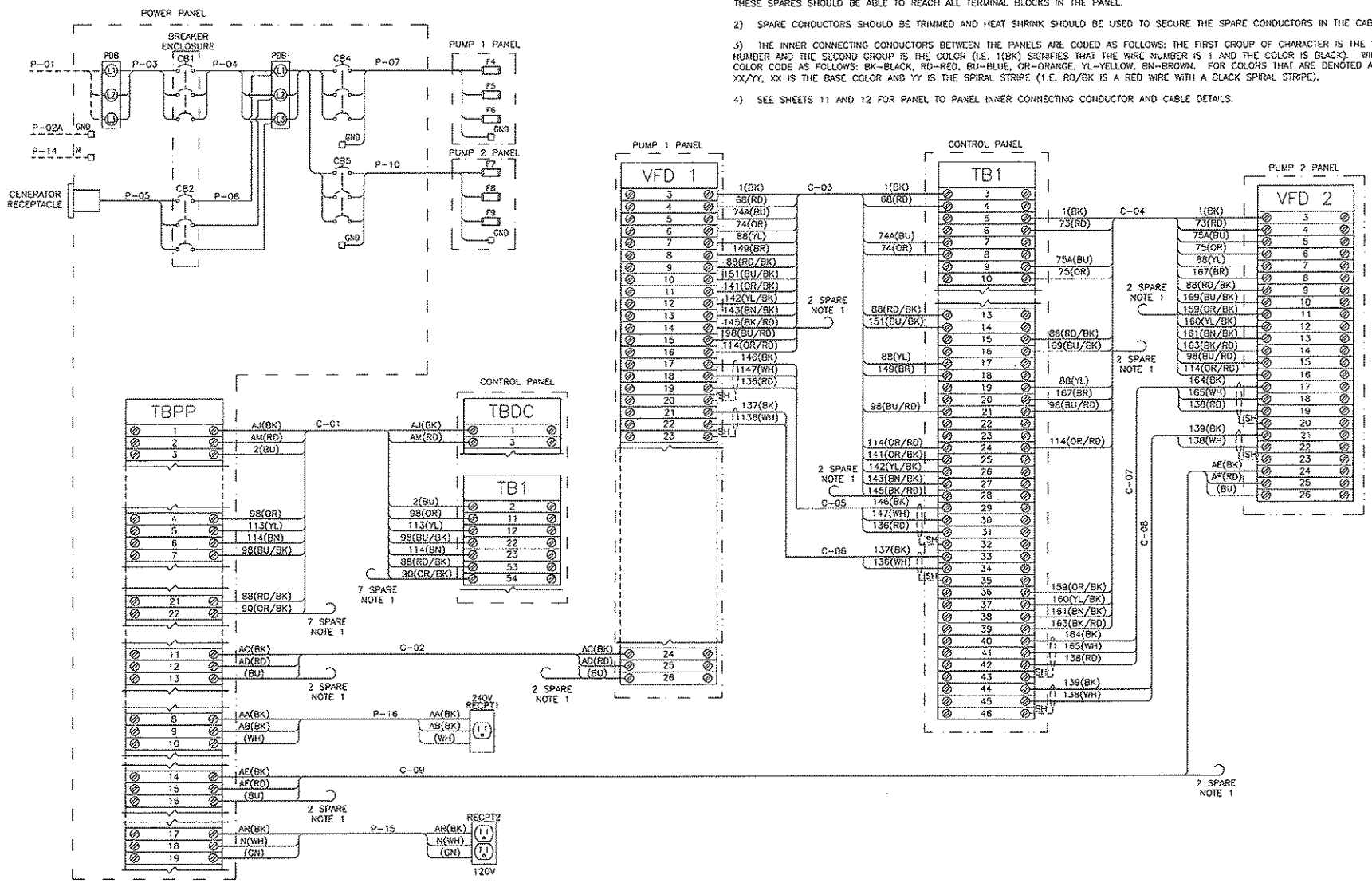

REVISIONS	BY

IMPROVEMENTS TO WASTEWATER COLLECTION SYSTEM

LIFT STATION CONSTRUCTION DETAILS

ELECTRICAL STANDARDS

FINAL SUBMITTAL

EMERALD COAST UTILITIES AUTHORITY

APPROVED BY:

Drawn	
Designed	
Checked	
Date	MAY '13
Scale	
Project No	
Sheet No.	13
	OF 18 Sheets

ALL WORK SHALL BE CONSTRUCTED IN ACCORDANCE WITH THE LATEST EDITION OF THE E.C.U.A. STANDARD SPECIFICATIONS

NOTES:

1. TOP AND BOTTOM OF BASE TO BE LEFT OPEN.
2. DRILL TOP OF BASE TO ATTACH ENCLOSURES AS REQUIRED.
3. DRILL BOTTOM OF BASE TO ATTACH TO SLAB AS REQUIRED.

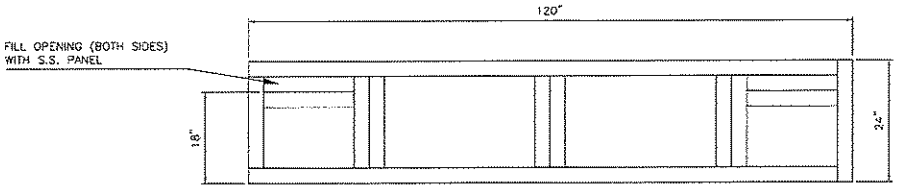

TOP VIEW

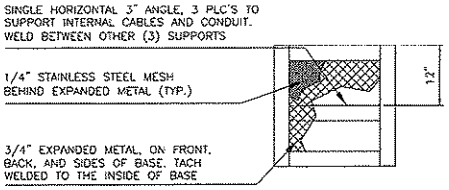

END VIEW

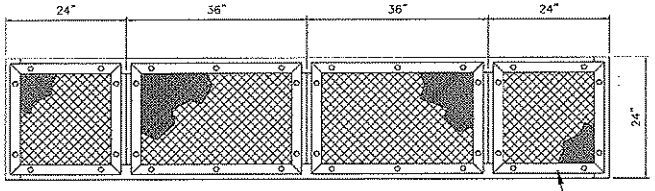

FRONT VIEW

FRONT OF BASE WILL HAVE REMOVABLE PANELS AT EACH OPENING AS SHOWN. ATTACH SCREENS TO BACK SIDE OF REMOVABLE PANELS

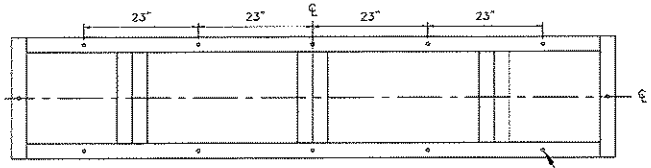

BOTTOM VIEW

DRILL (12) 5/8"ø HOLES AS SHOWN, CENTERED ON ANGLE

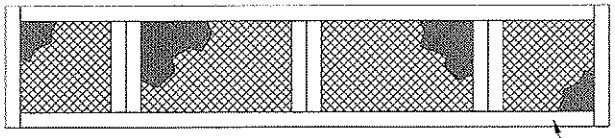

BACK VIEW

ENTIRE BASE MADE FROM 3" STAINLESS STEEL ANGLE, WELDED

REVISIONS	BY

IMPROVEMENTS TO WASTEWATER COLLECTION SYSTEM

LIFT STATION CONSTRUCTION DETAILS

ELECTRICAL STANDARDS

FINAL SUBMITTAL

EMERALD COAST UTILITIES AUTHORITY

APPROVED BY:

Drawn	
Designed	
Checked	
Date	MAY '13
Scale	
Project No	
Sheet No.	14
	OF 18 Sheets

ALL WORK SHALL BE CONSTRUCTED IN ACCORDANCE WITH THE LATEST EDITION OF THE E.C.U.A. STANDARD SPECIFICATIONS

Power Panel Fuse Schedule				
Fuse	Type	Voltage	Amps	Description
F1	KTK-R-1	600	1A	Phase Monitor A Phase
F2	KTK-R-1	600	1A	Phase Monitor B Phase
F3	KTK-R-1	600	1A	Phase Monitor C Phase
F12	AGC-3	250	3A	Power Supply 1 Primary
F13	AGC-3	250	3A	Power Supply 2 Primary

Pump 1 Panel Fuse Schedule				
Fuse	Type	Voltage	Amps	Description
F4	A70PXX-X	700	XXXA	Pump 1 Phase A
F5	A70PXX-X	700	XXXA	Pump 1 Phase B
F6	A70PXX-X	700	XXXA	Pump 1 Phase C
F7	AGC-1	250	1A	Pump 1 Control Power

*SEE SHEET 11 FOR FUSE TYPE AND AMPACITY

Pump 2 Panel Fuse Schedule				
Fuse	Type	Voltage	Amps	Description
F8	A70PXX-X	700	XXXA	Pump 2 Phase A
F9	A70PXX-X	700	XXXA	Pump 2 Phase B
F10	A70PXX-X	700	XXXA	Pump 2 Phase C
F11	AGC-1	250	1A	Pump 2 Control Power

*SEE SHEET 11 FOR FUSE TYPE AND AMPACITY

Control Panel Fuse Schedule				
Fuse	Type	Voltage	Amps	Description
F14	AGC-10	250	10A	Power Supply 1 Secondary
F15	AGC-10	250	10A	Power Supply 2 Secondary
F16	AGC-10	250	10A	Control Power
F17	AGC-10	250	10A	Batteries
F18	AGC-2	250	2A	Radio Power Supply Primary
F19	AGC-2	250	2A	Radio Power Supply Secondary
F20	AGC-1/4	250	1/4A	Pump 1 Motor Thermal
F21	AGC-1/4	250	1/4A	Pump 2 Motor Thermal
F22	AGC-1/10	250	1/10A	Operator Interface
F23	AGC-1	250	1A	Digital Inputs 0.0-1.4
F24	AGC-1	250	1A	Digital Inputs 1.5-2.7
F25	AGC-2	250	2A	Digital Outputs 0.0-0.7
F26	AGC-2	250	2A	Digital Outputs 1.0-1.7
F27	AGC-1-1/2	250	1-1/2A	PLC Power
F28	AGC-3/4	250	3/4A	Process Transmitter Supply
F29	AGC-1/10	250	1/10A	Analog Inputs
F30	AGC-1/10	250	1/10A	Analog Outputs
F31	GMA-1/4	250	1/4A	Analog Input 2
F32	GMA-1/4	250	1/4A	Analog Input 3
F33	GMA-1/4	250	1/4A	Analog Input 4

HMI BUTTON LEGEND	
F1	FAULT RESET/ENABLE INTRUSION
SHIFT+F1	DISABLE INTRUSION
F2	ALTERNATE PUMP ASSIGNMENTS
F3	RESET PUMP 1 RUNTIME
SHIFT+F3	RESET PUMP 2 RUNTIME
F4	ALARMS SCREEN
F5	OVERVIEW SCREEN
F6	PUMP 1 SCREEN
F7	PUMP 2 SCREEN
F8	SETPOINTS SCREEN

CONTROL PANEL ISR INFORMATION TAGS

THIS AREA IN BLUE IS FOR INTRINSICALLY SAFE CIRCUITS AND DEVICES ONLY. THIS AREA INCLUDES THE AIR SPACE DIRECTLY IN FRONT OF THE BLUE AREA BETWEEN THE BACKPANEL AND THE ENCLOSURE WALLS AND DOOR INCLUDING THE BOTTOM OF THE ENCLOSURE. ONLY INTRINSICALLY SAFE DEVICES AND WIRING ARE ALLOWED IN THIS AREA. DO NOT ROUTE NON-INTRINSICALLY SAFE WIRING THROUGH THIS AREA OF ENCLOSURE.

WARNING

SUBSTITUTION OF COMPONENTS MAY IMPAIR INTRINSIC SAFETY

CONTROL PANEL EXTERIOR TAG INFORMATION

WARNING

TO PREVENT IGNITION OF FLAMMABLE OR COMBUSTIBLE ATMOSPHERES DISCONNECT POWER BEFORE SERVICING

PROVIDES INTRINSICALLY SAFE CIRCUIT EXTENSIONS FOR USE IN CLASS I, GROUPS A, B, C, AND D WHEN CONNECTED PER REFERENCE DRAWINGS ON MAIN NAMEPLATE LABEL

VFD 1 & 2 INCOMING FUSE TAG INFORMATION

WARNING

FUSES FEED FROM BOTTOM SIDE

CONTROL PANEL DEADFRONT TAG INFORMATION

SECURELY FASTEN ALL INNER DOOR LATCHES BEFORE CLOSING OUTER DOOR. FAILURE TO FOLLOW THESE INSTRUCTIONS COULD CAUSE THE OUTER DOOR TO JAM WHEN RE-OPENED

Nameplate Data								
Total Load (FLA)	54	61	67	79	91	107	138	164
Motor Hp	1	2	3	5	7.5	10	15	20
Motor FLA	4.2	6.8	9.6	15.2	22	28	42	54

Torque Rating Table								
	Horsepower							
Component	1	2	3	5	7.5	10	15	20
Incoming Distribution Block (PDB1)	120lb-in/13.5N-m	120lb-in/13.5N-m	120lb-in/13.5N-m	120lb-in/13.5N-m	120lb-in/13.5N-m	275lb-in/31.0N-m	275lb-in/31.0N-m	275lb-in/31.0N-m
Incoming Neutral Block	45lb-in/5.1N-m	45lb-in/5.1N-m	45lb-in/5.1N-m	45lb-in/5.1N-m	45lb-in/5.1N-m	45lb-in/5.1N-m	45lb-in/5.1N-m	45lb-in/5.1N-m
Main Ground Block	25lb-in/2.8N-m	25lb-in/2.8N-m	25lb-in/2.8N-m	25lb-in/2.8N-m	35lb-in/3.9N-m	35lb-in/3.9N-m	35lb-in/3.9N-m	35lb-in/3.9N-m
Motor Distribution Block (PDB2 & 3)	35lb-in/4.0N-m	35lb-in/4.0N-m	35lb-in/4.0N-m	35lb-in/4.0N-m	35lb-in/4.0N-m	40lb-in/4.5N-m	120lb-in/13.5N-m	120lb-in/13.5N-m
Motor Ground Block	35lb-in/4.0N-m	35lb-in/4.0N-m	35lb-in/4.0N-m	35lb-in/4.0N-m	35lb-in/4.0N-m	40lb-in/4.5N-m	45lb-in/5.1N-m	45lb-in/5.1N-m

REVISIONS	BY

IMPROVEMENTS TO WASTEWATER COLLECTION SYSTEM

LIFT STATION CONSTRUCTION DETAILS

ELECTRICAL STANDARDS

FINAL SUBMITTAL

EMERALD COAST UTILITIES AUTHORITY

APPROVED BY:

Drawn:
Designed:
Checked:
Date: MAY '13
Scale:
Project No:
Sheet No. 15
OF 18 Sheets

ALL WORK SHALL BE CONSTRUCTED IN ACCORDANCE WITH THE LATEST EDITION OF THE E.C.U.A. STANDARD SPECIFICATIONS

HAZARDOUS (CLASSIFIED) LOCATION	NON-HAZARDOUS LOCATION
CLASS I, ZONE 0 OR 1, GROUPS IIC, IIB, IIA or CLASS I, DIVISION 1, GROUPS A,B,C,D CLASS II, DIVISION 1, GROUPS E,F,G CLASS III, DIVISION 1	CLASS I, ZONE 2, GROUPS IIC, IIB, IIA or CLASS I, DIVISION 2, GROUPS A,B,C,D

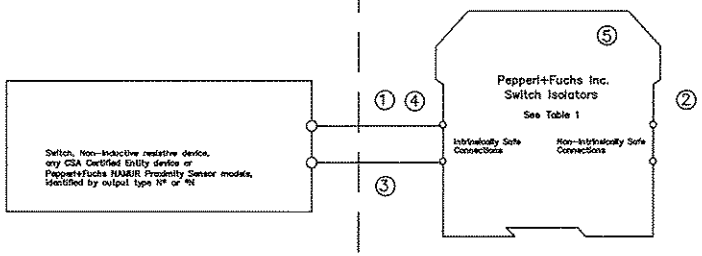

Notes:

① The intrinsically safe wiring must be installed in accordance with the Canadian Electrical Code CSA C22.1, Part 1, Appendix F.

② Barriers listed in Table 1 shall not be connected to any device that uses or generates in excess of 250Vrms or DC unless it has been determined that the voltage is adequately isolated from the barrier. Barriers listed in Table 2 shall not be connected to any device that uses or generates in excess of 60Vrms or DC unless the voltage is limited by an adequate means.

③ Any combination of up to 10 channels of the barriers listed in Table 1 or Table 2 may be connected in parallel and connected to a switch in a hazardous location.

④ The Entity concept allows interconnection of intrinsically safe apparatus with associated apparatus not specifically examined in combination as a system when the approved values of Voc and Isc for the associated apparatus are less than or equal to Vmax and Imax for the intrinsically safe apparatus and the approved values of Ca and La for the associated apparatus are greater than Ci + Ccable and Li + Lcable, respectively, for the intrinsically safe apparatus.

⑤ The following models with part number greater than 100000 are approved for mounting in a Class I, Zone 2, Groups IIC,IIB,IIA or Class I, Division 2, Groups A,B,C,D hazardous (classified) location: KF**-SR2-EX1.W, KF**-SR2-EX1.W.LB, KF**-SR2-EX2.W, KFD2-SR2-EX2.2S, KFD2-ST2-EX1.*, KFD2-ST2-EX2.*, KFD2-SOT2-EX1.*, KFD2-SOT2-EX2.*.

WARNING: Substitution of components may impair intrinsic safety and/or suitability for use in Class I, Division 2, Groups A,B,C,D or Class I, Zone 2, Groups IIC,IIB,IIA.
ADVERTISSEMENT: La substitution de composants peut compromettre la sécurité intrinsèque.

No changes without prior permission
CSA
THIS DRAWING CONTAINS PROPRIETARY DATA. NO DISCLOSURE, REPRODUCTION, OR USE OF ANY PART MAY BE MADE EXCEPT BY WRITTEN PERMISSION.

Title: Installation Drawing for CSA Certified Switch Isolators

Revisions				ECO No.	
2-20-2008					
In.	Date	Cons.	Resp.	Appr.	

Pepperl+Fuchs® Inc.
Twinsburg, OH 44087-2202

Repl. No. –

Draw. No. 116-0047j

Sh. 1 of 2

TABLE 1: Barriers Certified to CSA Standard C22.2 No. 157 (Um = 250 V)

Model Numbers	Terminals	SYSTEM V_{max}(V)	SYSTEM Res. (Ω)	ENTITY V_{oc} (V)	ENTITY I_{sc}(mA)	ENTITY C_a(uF) GRPS A,B	ENTITY C_a(uF) GRPS C,E	ENTITY C_a(uF) GRPS D,F,G	ENTITY L_a(mH) GRPS A,B	ENTITY L_a(mH) GRPS C,E	ENTITY L_a(mH) GRPS D,F,G
KFD2-SOT-Ex1*,KFD2-SOT-Ex2* KFD2-SR-Ex1*,KFD2-SR-Ex2* KFD2-SRT-Ex1* KFD2-ST-Ex1*,KFD2-ST-Ex2* KFA5-SR2-Ex1*,KFA5_SR2-Ex2* KFA6-SR2-Ex1*,KFA6-SR2-Ex2* KFD2-SR2-Ex1*,KFD2-SR2-Ex2*	1-3, 2-3; 4-6, 5-6	12.6	650	12.9	19.8	1.273	3.820	10.18	84.88	298.7	744.4
KFA5-SOT2-Ex1*,KFA5-SOT2-Ex2* KFA6-SOT2-Ex1*,KFA6-SOT2-Ex2*	1-3, 2-3; 4-6, 5-6	10.5	811	10.5	13.0	2.66	7.9	21.3	192	671	1000

TABLE 2: Barriers Certified to CSA Standard E79-11 (Um = 60 V)

Model Numbers	Terminals	Load Parameters U_o (V_{oc})	I_o (I_{sc})	C_a(uF) GRPS IIC (A,B)	C_a(uF) GRPS IIB (C,E)	C_a(uF) GRPS IIA (D,F,G)	L_a(mH) GRPS IIC (A,B)	L_a(mH) GRPS IIB (C,E)	L_a(mH) GRPS IIA (D,F,G)
KFD2-SOT2-Ex1*,KFD2-SOT2-Ex2* KFD2-ST2-Ex1*,KFD2-ST2-Ex2*	1-3, 2-3; 4-6, 5-6	10.5	13.0	2.66	7.9	21.3	192	671	1000

No changes without prior permission
CSA
THIS DRAWING CONTAINS PROPRIETARY DATA. NO DISCLOSURE, REPRODUCTION, OR USE OF ANY PART MAY BE MADE EXCEPT BY WRITTEN PERMISSION.

Title: Installation Drawing for CSA Certified Switch Isolators

Revisions				ECO No.	
2-20-2008					
In.	Date	Cons.	Resp.	Appr.	

Pepperl+Fuchs® Inc.
Twinsburg, OH 44087-2202

Repl. No. –

Draw. No. 116-0047j

Sh. 2 of 2

REVISIONS	BY

IMPROVEMENTS TO WASTEWATER COLLECTION SYSTEM
LIFT STATION CONSTRUCTION DETAILS
ELECTRICAL STANDARDS
FINAL SUBMITTAL

EMERALD COAST UTILITIES AUTHORITY

APPROVED BY:

Drawn:
Designed:
Checked:
Date: MAY '13
Scale:
Project No:
Sheet No. 16
OF 18 Sheets

GENERAL ELECTRICAL NOTES

NEW WORK:

1. ENTIRE ELECTRICAL INSTALLATION SHALL BE IN ACCORDANCE WITH THE LATEST EDITION (UNLESS NOTED OTHERWISE) OF THE FOLLOWING CODES AND STANDARDS:
   1.1. NATIONAL ELECTRICAL CODE (NFPA 70).
   1.2. STANDARD FOR FIRE PROTECTION IN WASTEWATER TREATMENT AND COLLECTION FACILITIES (NFPA 820).
2. THE CONTRACTOR SHALL BE RESPONSIBLE FOR READING ALL PROJECT SPECIFICATIONS AND WILL BE RESPONSIBLE FOR MEETING ALL REQUIREMENTS OUTLINED IN THE SPECIFICATIONS.
3. CONTRACTOR SHALL COORDINATE ALL WORK WITH OTHER TRADES PRIOR TO ROUGH-IN AND INSTALLATION.
4. WORKING SPACE FOR ALL ELECTRICAL AND CONTROL EQUIPMENT OPERATING AT 600V VOLTS OR LESS TO GROUND AND LIKELY TO REQUIRE EXAMINATION, ADJUSTMENT, SERVICING, OR MAINTENANCE WHILE ENERGIZED SHALL COMPLY WITH NEC, ARTICLE 110.26.
5. THE ELECTRICAL DESIGN PROVIDES A NUMBER OF BRANCH CIRCUITS, AMPACITY AND OVERCURRENT PROTECTION FOR OTHER DIVISIONS DESIGN BASIS EQUIPMENT CONFORMING TO MANUFACTURER'S SPECIFICATIONS AVAILABLE AT TIME OF DESIGN. THE CONTRACTOR SHALL VERIFY ALL EQUIPMENT LOADS PRIOR TO ROUGH-IN. IF REQUIREMENTS OF EQUIPMENT ACTUALLY PROVIDED UNDER CONTRACT FOR CONSTRUCTION ARE DIFFERENT, CONTRACTOR SHALL MAKE ALL CHANGES NECESSARY WITHOUT INCREASE IN THE CONTRACT AMOUNT. SUCH CHANGES SHALL BE BASED UPON REQUIREMENTS, NAMEPLATE VALUES AND CODE REQUIREMENTS, WHICHEVER IS MORE STRINGENT, AND MAY INCLUDE, BUT ARE NOT LIMITED TO: SIZE OF CONDUCTORS, SIZE OF CONDUIT, QUANTITY OF CONDUCTORS AND CONDUITS, TYPE AND SIZE OF CIRCUIT BREAKER OR DISCONNECT, OVERLOADS, FULL-VOLTAGE STARTERS, REDUCED VOLTAGE SOFT STARTERS, VARIABLE FREQUENCY DRIVES, AND FUSE PROTECTION.
6. THE ELECTRICAL CONTRACTOR IS REQUIRED TO COORDINATE, PROVIDE, AND INSTALL A FULLY OPERATIONAL AND CODE COMPLIANT ELECTRICAL SYSTEM. THIS MAY INCLUDE THE ADDITION OF ELECTRICAL ITEMS NOT SHOWN ON THE ELECTRICAL PLANS, BUT REQUIRED FOR SYSTEM OPERATION.
7. CONTRACTOR SHALL COORDINATE INSTALLATION OF ELECTRICAL SERVICE WITH ELECTRICAL UTILITY COMPANY PROVIDING ELECTRICAL SERVICE TO FACILITY. CONTRACTOR SHALL PAY ALL FEES ASSESSED BY ELECTRICAL UTILITY COMPANY TO PROVIDE ELECTRICAL SERVICE TO FACILITY.
8. CONTRACTOR SHALL EXCAVATE AND CONDUCT DEMOLITION SO AS TO AVOID DAMAGE TO EXISTING UTILITIES AND OTHER UNDERGROUND OR CONCEALED ITEMS. IF EXISTING OR NEW ITEMS ARE DAMAGED, THE CONTRACTOR SHALL NOTIFY THE OWNER AT ONCE OF ALL DAMAGE AND SHALL REPAIR (OR REPLACE IF NECESSARY) TO THE ORIGINAL CONDITION TO THE SATISFACTION OF OWNER AND ENGINEER AT NO CHARGE IN THE CONTRACT AMOUNT.
9. THE CONTRACTOR SHALL BE RESPONSIBLE FOR PROVIDING DETAILED ELECTRICAL AND CONTROL EQUIPMENT LAYOUT DRAWINGS TO THE ENGINEER AND OWNER FOR APPROVAL PRIOR TO INSTALLATION.
10. ALL CONDUITS NOT LOCATED UNDER SLAB SHALL HAVE A MINIMUM BURIAL DEPTH OF 42", UNLESS NOTED OTHERWISE.
11. CONDUITS SHALL BE BURIED 42" (MINIMUM) BELOW GRADE WITH MARKER TAPE 6" ABOVE TOP OF CONDUIT, UNLESS NOTED OTHERWISE.
12. MINIMUM SIZE CONDUIT SHALL BE 1" (UNLESS NOTED OTHERWISE).
13. CONDUIT ROUTINGS AND DEVICE/EQUIPMENT LOCATIONS SHOWN ARE DIAGRAMMATIC ONLY. CONTRACTOR SHALL FIELD ROUTE AND LOCATE AS REQUIRED.
14. CONTRACTOR SHALL PROVIDE PULL BOXES IN POWER CIRCUIT CONDUIT AS REQUIRED TO LIMIT THE NUMBER OF BENDS TO A MAXIMUM OF 270° OR THREE 90° BENDS.
15. ALL WIRE SHALL BE COPPER.
16. ALL ELECTRICAL CIRCUITS SHALL INCLUDE A GREEN GROUNDING CONDUCTOR SIZED PER NEC.
17. CONDUCTORS SHALL BE TERMINATED ON TERMINAL BLOCKS.
18. THE CONTRACTOR SHALL TAG ALL POWER AND CONTROL SYSTEM CABLING AT ALL TERMINATION POINTS.
19. FINAL CONNECTION TO ALL EQUIPMENT IS SHOWN DIAGRAMMATIC. PROVIDE FINAL CONNECTION AS REQUIRED PER MANUFACTURER OF EQUIPMENT.
20. CONTRACTOR SHALL MAINTAIN A SET OF PRINTS AND MARK-UP DURING CONSTRUCTION TO REFLECT "AS-BUILT" CONDITIONS. PRINTS SHALL BE DELIVERED TO THE ENGINEER UPON COMPLETION OF THE PROJECT.
21. ALL HARDWARE SHALL BE STAINLESS STEEL.
22. ALUMINUM CONDUIT SHALL BE COATED WITH (2) WRAPS OF ANTI-CORROSION TAPE OR RUN THROUGH A SCHEDULE 80 PVC SLEEVE TO WHEN IN CONTACT WITH CONCRETE.
23. BARE COPPER SHALL BE COATED WITH (2) WRAPS OF ANTI-CORROSION TAPE OR RUN THROUGH A SCHEDULE 80 PVC SLEEVE TO WHEN IN CONTACT WITH CONCRETE.
24. ENGINEER OF RECORD SHALL BE RESPONSIBLE FOR FINAL SIZING OF ALL EQUIPMENT.

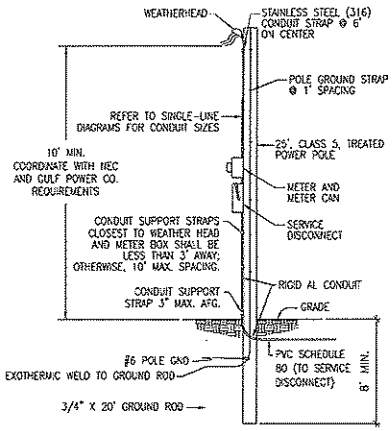

SERVICE LATERAL CONDUIT SHALL BE 3" (MIN) SCHEDULE 80 PVC BELOW GRADE AND 3" (MIN) RIGID AL CONDUIT ABOVE GRADE. ANY REQUIREMENTS BY THE UTILITY COMPANY SHALL PREVAIL OVER THE REQUIREMENTS OUTLINED HERE AND SHALL BE COORDINATED BY THE ELECTRICAL CONTRACTOR PRIOR TO INSTALLATION.

A3 UTILITY POLE DETAIL
NOT TO SCALE

ALL WORK SHALL BE CONSTRUCTED IN ACCORDANCE WITH THE LATEST EDITION OF THE E.C.U.A. STANDARD SPECIFICATIONS

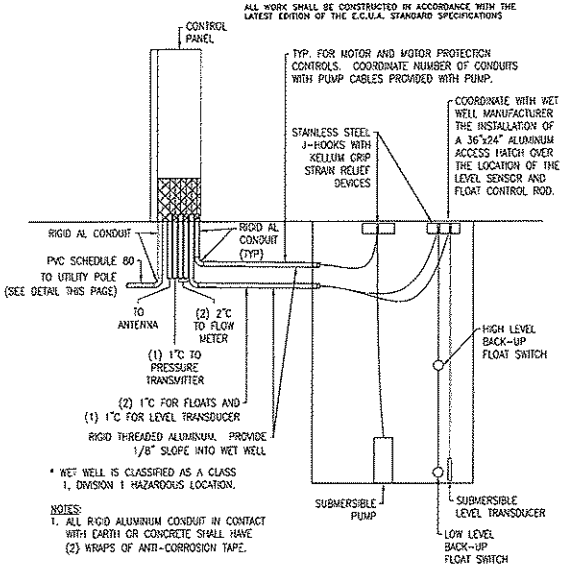

* WET WELL IS CLASSIFIED AS A CLASS 1, DIVISION 1 HAZARDOUS LOCATION.

NOTES:
1. ALL RIGID ALUMINUM CONDUIT IN CONTACT WITH EARTH OR CONCRETE SHALL HAVE (2) WRAPS OF ANTI-CORROSION TAPE.

B4 TYPICAL WET WELL SECTION DETAIL
NOT TO SCALE

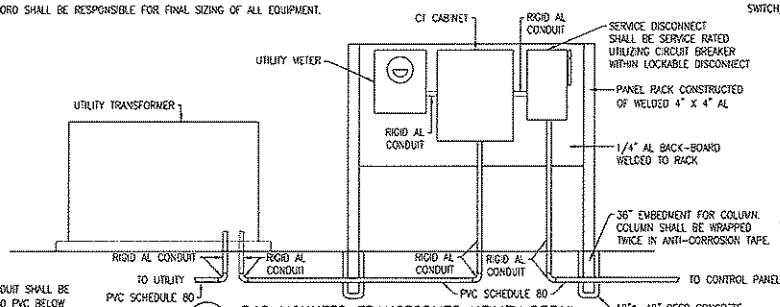

* SERVICE LATERAL CONDUIT SHALL BE 3" (MIN) SCHEDULE 80 PVC BELOW GRADE AND 3" (MIN) RIGID ALUMINUM CONDUIT ABOVE GRADE.

A1 PAD MOUNTED TRANSFORMER UTILITY DETAIL
NOT TO SCALE

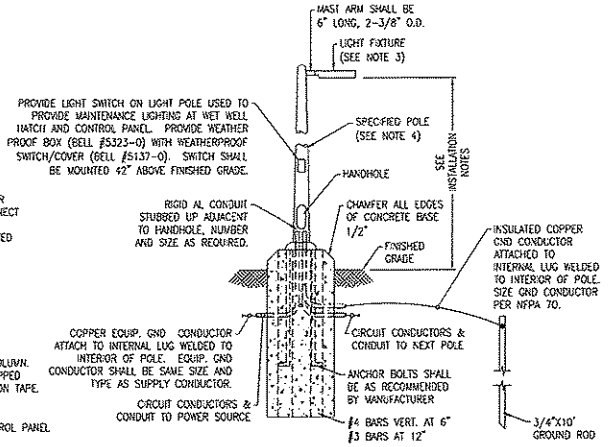

A4 LIGHT POLE INSTALLATION DETAIL
NOT TO SCALE

LIGHTING PERFORMANCE CRITERIA:
1. LIGHTING FIXTURE LAYOUT SHALL BE BASED UPON ACHIEVING 20 FOOT CANDLES (+/- 20%) AT THE FRONT OF THE CONTROL PANEL (WORK-PLANE OF 24" AFG) AND AT THE WET WELL ACCESS HATCH (WORKPLANE OF 0" AFG).
2. GENERAL SECURITY LIGHTING SHALL ENCOMPASS ACCESS GATE AND ALL PIPING/EQUIPMENT AT A MIN: AVERAGE 1 FOOT-CANDLE (+/- 20%, AT WORKPLANE OF 0" AFG).
3. REFER TO LIGHTING CONTROL DIAGRAM ON SHEET No. 18 FOR ADDITIONAL REQUIREMENTS.

LIGHT POLE INSTALLATION NOTES:
1. BURIAL AND DIAMETER DIMENSIONS INDICATED ARE FOR NOMINAL MINIMAL SIZES ONLY. FINAL DIMENSIONS SHALL BE DETERMINED BY A REGISTERED STRUCTURAL ENGINEER IN THE STATE OF FLORIDA BASED UPON FIXTURES PROVIDED. PROVIDE SIGNED, DATED, AND SEALED PLANS FOR EACH INSTALLATION TYPE AND FIXTURE TYPE AS PART OF LIGHTING SUBMITTAL PACKAGE.
2. THE POLE AND FOUNDATION DESIGN SHALL BE BY A DELEGATED PROFESSIONAL ENGINEER TO MEET THE FOLLOWING CRITERIA:
   2.1. DESIGN WIND SPEED 160 MPH WITH A 1.3 GUST FACTOR. EXPOSURE CATEGORY C.
   2.2. SIZE EMBEDMENT FOR A MAXIMUM PERMANENT POLE DEFLECTION AFTER DESIGN WIND SPEED EVENT OF 1.60".
   2.3. ALUMINUM, ROUND OR SQUARE, TAPERED.
3. FIXTURE SHALL BE AMERICAN ELECTRIC LIGHTING AT82 FIXTURE, 40 LED, 1000mA DRIVER, 120V, TYPE 4, WITH PHOTOCONTROL.
4. REFER TO SPECIFICATIONS SECTION 16521 "EXTERIOR LIGHTING" FOR ADDITIONAL REQUIREMENTS.
5. LIGHT FIXTURES SHALL BE MOUNTED AT 15'-0" (MAXIMUM) ABOVE FINISHED GRADE.

REVISIONS	BY

IMPROVEMENTS TO WASTEWATER COLLECTION SYSTEM
LIFT STATION CONSTRUCTION DETAILS
ELECTRICAL STANDARDS
FINAL SUBMITTAL

EMERALD COAST UTILITIES AUTHORITY

APPROVED BY:

Drawn:
Designed:
Checked:
Date: MAY '13
Scale:
Project No:
Sheet No. 17
OF 18 Sheets

ALL WORK SHALL BE CONSTRUCTED IN ACCORDANCE WITH THE LATEST EDITION OF THE E.C.U.A. STANDARD SPECIFICATIONS

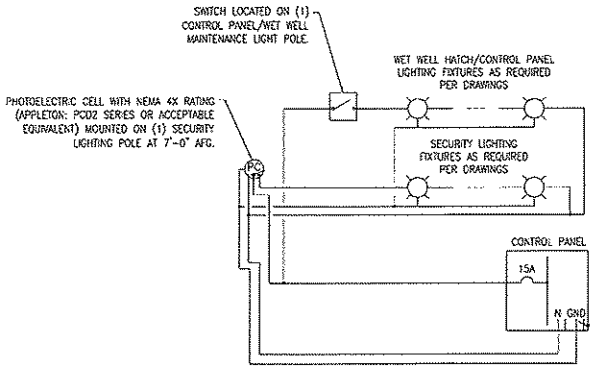

C2 TYPICAL LIGHTING CONTROL DIAGRAM
NOT TO SCALE

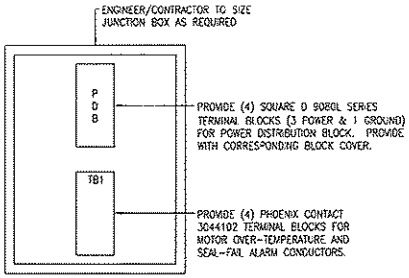

INTERIOR ELEVATION

DETAIL NOTES:

1. ALL TERMINAL BLOCKS SHALL BE PROVIDED WITH CORRESPONDING END BRACKETS AND END COVERS.
2. PROVIDE SEPARATE GROUND LUG IN EACH JUNCTION BOX, BONDED TO JUNCTION BOX.

A1 TYPICAL PUMP JUNCTION BOX ELEVATION
NOT TO SCALE

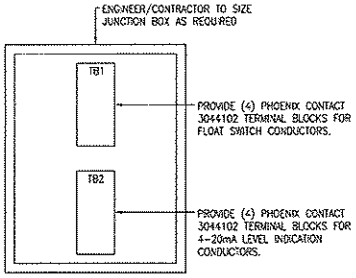

INTERIOR ELEVATION

DETAIL NOTES:

1. ALL TERMINAL BLOCKS SHALL BE PROVIDED WITH CORRESPONDING END BRACKETS AND END COVERS.
2. PROVIDE SEPARATE GROUND LUG IN EACH JUNCTION BOX, BONDED TO JUNCTION BOX.

A3 TYPICAL LEVEL INDICATION JUNCTION BOX ELEVATION
NOT TO SCALE

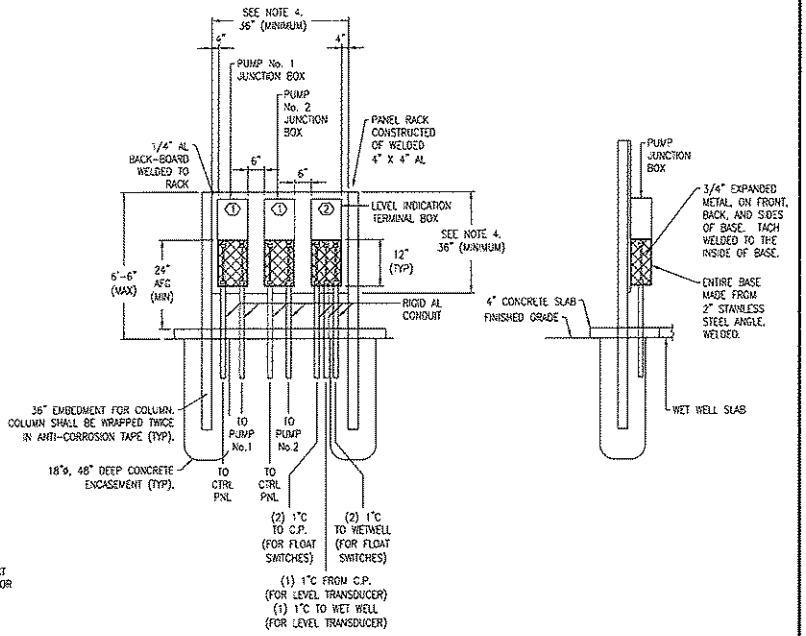

FRONT ELEVATION

SIDE ELEVATION

DETAIL NOTES:

1. THIS DETAIL SHALL ONLY APPLY WHEN THE CONTROL PANEL CANNOT BE PLACED WITHIN 6'-0" OF THE WET WELL TO ALLOW FOR CONNECTION OF STANDARD 50 FOOT PUMP CABLE CONNECTIONS.
2. BACKBOARD SHALL BE PLACED AT THE EDGE OF THE WET WELL SLAB BETWEEN THE WET WELL AND CONTROL PANEL.
3. JUNCTION BOXES SHALL BE MOUNTED SUCH THAT THEY ARE FACING THE WET WELL.
4. ENGINEER/CONTRACTOR SHALL SIZE JUNCTION BOXES AND BACKBOARDS BASED UPON INSTALLATION REQUIREMENTS PROVIDED AT TIME OF DESIGN.

KEY NOTES

① REFER TO "TYPICAL PUMP JUNCTION BOX ELEVATION" (THIS SHEET) FOR ADDITIONAL REQUIREMENTS.

② REFER TO "TYPICAL LEVEL INDICATION JUNCTION BOX ELEVATION" (THIS SHEET) FOR ADDITIONAL REQUIREMENTS.

A4 TYPICAL PUMP JUNCTION BOXES
NOT TO SCALE

REVISIONS	BY

IMPROVEMENTS TO WASTEWATER COLLECTION SYSTEM

LIFT STATION CONSTRUCTION DETAILS

ELECTRICAL STANDARDS

FINAL SUBMITTAL

EMERALD COAST UTILITIES AUTHORITY

APPROVED BY:

Drawn	
Designed	
Checked	
Date	MAY '13
Scale	
Project No	
Sheet No.	18
	OF 18 Sheets

ALL WORK SHALL BE CONSTRUCTED IN ACCORDANCE WITH THE LATEST EDITION OF THE E.C.U.A. STANDARD SPECIFICATIONS

240-208V 3ø 20HP – 25HP REDUCED VOLTAGE SOFT STARTER ELECTRICAL STANDARD – ALTERNATE

FOR

EMERALD COAST UTILITY AUTHORITY ESCAMBIA COUNTY, FL

SHEET NO.	SHEET DESCRIPTION
1	MAIN POWER DISTRIBUTION SCHEMATIC
2	CONTROL SCHEMATIC
3	DIGITAL INPUTS SCHEMATIC
4	DIGITAL OUTPUTS & ANALOG INPUTS SCHEMATIC
5	ANALOG OUTPUTS & STARTER CONTROL SCHEMATIC
6	TERMINAL BLOCK LAYOUT AND FIELD CONNECTIONS
7A	BACK-TO-BACK EXTERIOR PANEL LAYOUT & FIELD CONDUIT REQUIREMENTS
8	POWER & PUMP 1 INTERNAL PANEL LAYOUTS
9	PUMP 2 & CONTROL PANEL INTERNAL LAYOUTS
10	EQUIPMENT LIST
11	HORSEPOWER RELATED EQUIPMENT & POWER CONDUCTORS
12	PANEL TO PANEL CONDUCTORS & EQUIPMENT
13	PANEL TO PANEL WIRING
14A	BACK-TO-BACK STAINLESS STEEL FRAME LAYOUT
15	TABLES, LEGENDS & TAGS
16	ISR INSTRUCTIONS
17	GENERAL NOTES AND DETAILS
18	GENERAL NOTES AND DETAILS

REVISIONS	BY

IMPROVEMENTS TO WASTEWATER COLLECTION SYSTEM

LIFT STATION CONSTRUCTION DETAILS

ELECTRICAL STANDARDS

FINAL SUBMITTAL

EMERALD COAST UTILITIES AUTHORITY

APPROVED BY:

Drawn:
Designed:
Checked:
Date: MAY '13
Scale:
Project No:
Sheet No. 0
OF 18 Sheets

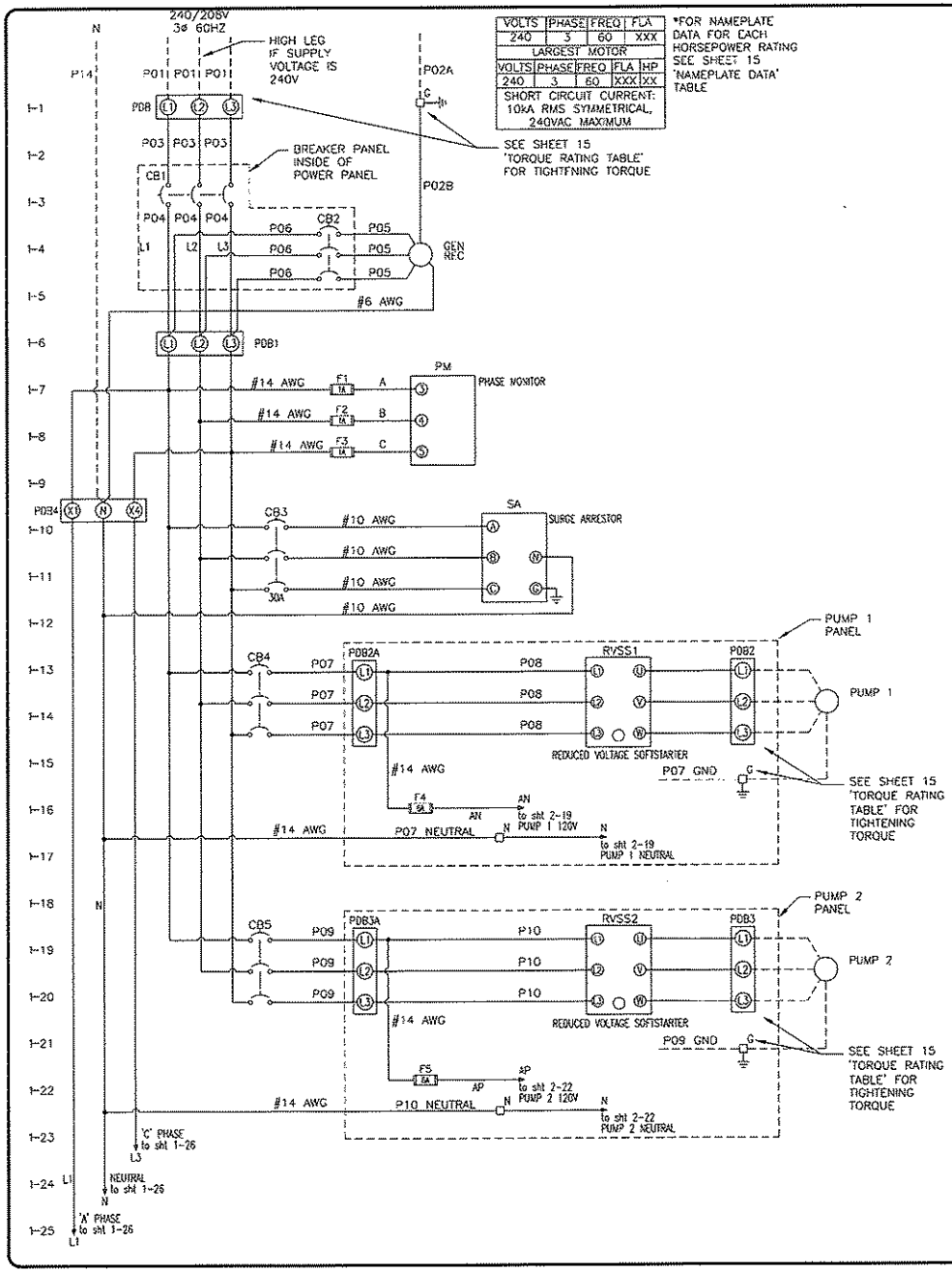

VOLTS	PHASE	FREQ	FLA
240	3	60	XXX
LARGEST MOTOR			
VOLTS	PHASE	FREQ	FLA	HP
240	3	60	XXX	XX
SHORT CIRCUIT CURRENT: 10kA RMS SYMMETRICAL, 240VAC MAXIMUM			

*FOR NAMEPLATE DATA FOR EACH HORSEPOWER RATING SEE SHEET 15 'NAMEPLATE DATA' TABLE

ALL WORK SHALL BE CONSTRUCTED IN ACCORDANCE WITH THE LATEST EDITION OF THE E.C.U.A. STANDARD SPECIFICAIONS

NOTES:

1. THE COMPLETED CONTROL PANEL SHALL BE LABELED AND MANUFACTURED TO MEET U.L. 508A AND 698A CERTIFICATION.
2. CONTROL PANEL WIRING SHALL BE STRANDED COPPER, MINIMUM SIZE #16 AWG WITH 600V 90DEGREE C TYPE THHN INSULATION.
3. CONTROL PANEL WIRING SHALL BE NUMBERED AT BOTH ENDS WITH TYPE WRITTEN, HEAT SHRINKABLE WIRE MARKERS.
4. ALL WIRING WITHIN THE CONTROL PANEL SHALL BE COLOR CODED OR CODED USING ELECTRICAL TAPE IN SIZES WHERE COLORED INSULATION IS NOT AVAILABLE. THE FOLLOWING CODING SHALL BE USED:
   - 4.1. UNGROUNDED AC CONDUCTORS AT SUPPLY VOLTAGE – BLACK
   - 4.2. GROUNDED AC CURRENT CARRYING CONDUCTORS – WHITE
   - 4.3. UNGROUNDED AC CONDUCTORS BELOW SUPPLY VOLTAGE – RED
   - 4.4. UNGROUNDED AC CONTROL CONDUCTORS & CONDUCTORS THAT REMAIN ENERGIZED WHEN THE MAIN DISCONNECT IS OFF – YELLOW
   - 4.5. UNGROUNDED DC CONTROL CONDUCTORS – ORANGE
   - 4.6. GROUNDED DC CURRENT CARRYING CONDUCTORS – BROWN
   - 4.7. INTRINSICALLY SAFE WIRING – BLUE
   - 4.8. GROUND CONDUCTORS – GREEN
5. SEE SHEETS 11 & 12 FOR DETAILS REGARDING ALL POWER CONDUCTORS LABELED PXX.
6. SEE SHEET 11 'HORSEPOWER RELATED COMPONENTS EQUIPMENT LIST' FOR RATINGS OF OVERCURRENT PROTECTION DEVICES.

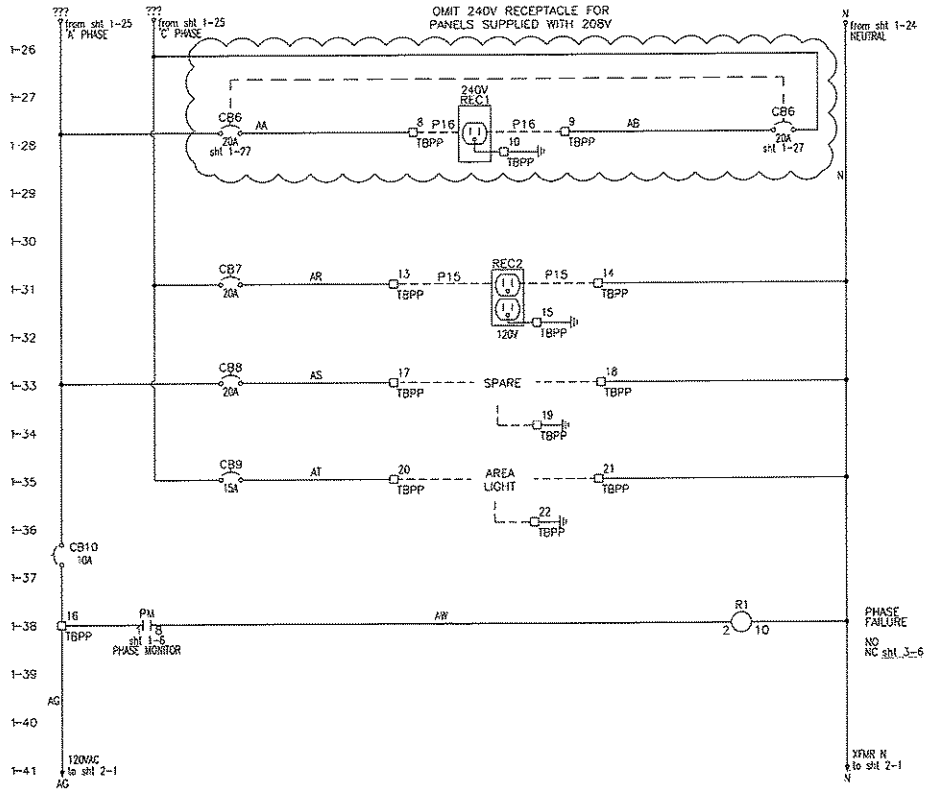

REVISIONS	BY

IMPROVEMENTS TO WASTEWATER COLLECTION SYSTEM

LIFT STATION CONSTRUCTION DETAILS

ELECTRICAL STANDARDS

FINAL SUBMITTAL

EMERALD COAST UTILITIES AUTHORITY

APPROVED BY:

Drawn:
Designed:
Checked:
Date: MAY '13
Scale:
Project No:
Sheet No. 1 OF 18 Sheets

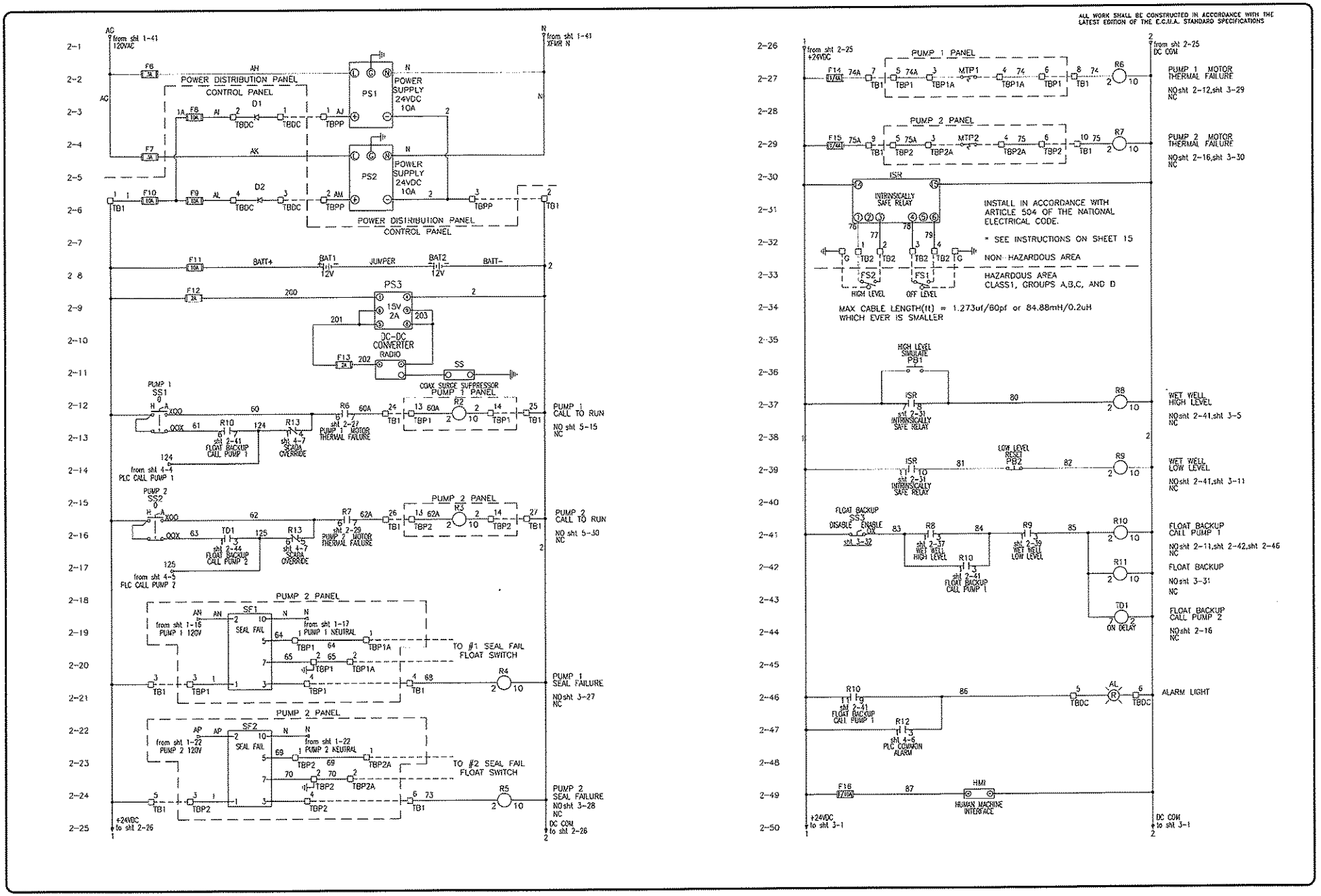

REVISIONS	BY

IMPROVEMENTS TO WASTEWATER COLLECTION SYSTEM

LIFT STATION CONSTRUCTION DETAILS

ELECTRICAL STANDARDS

FINAL SUBMITTAL

ECUA EMERALD COAST UTILITIES AUTHORITY

APPROVED BY:

Drawn:	
Designed:	
Checked:	
Date:	MAY '13
Scale:	
Project No:	
Sheet No.	2
	OF 18 Sheets

ALL WORK SHALL BE CONSTRUCTED IN ACCORDANCE WITH THE LATEST EDITION OF THE E.C.U.A. STANDARD SPECIFICATIONS

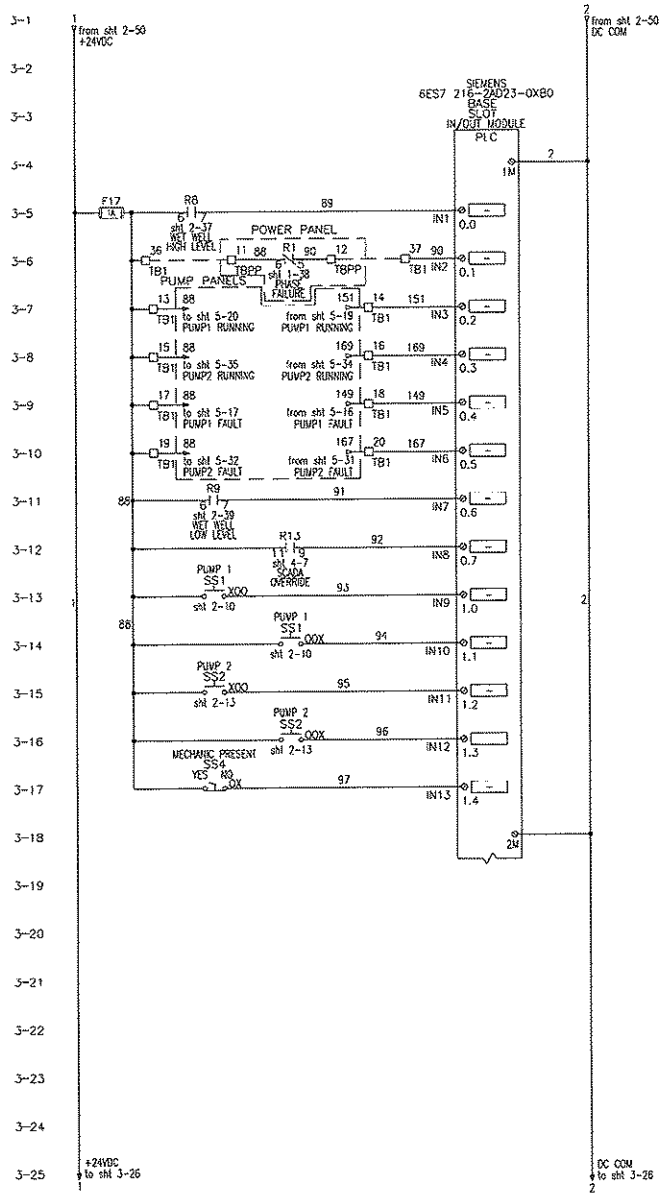

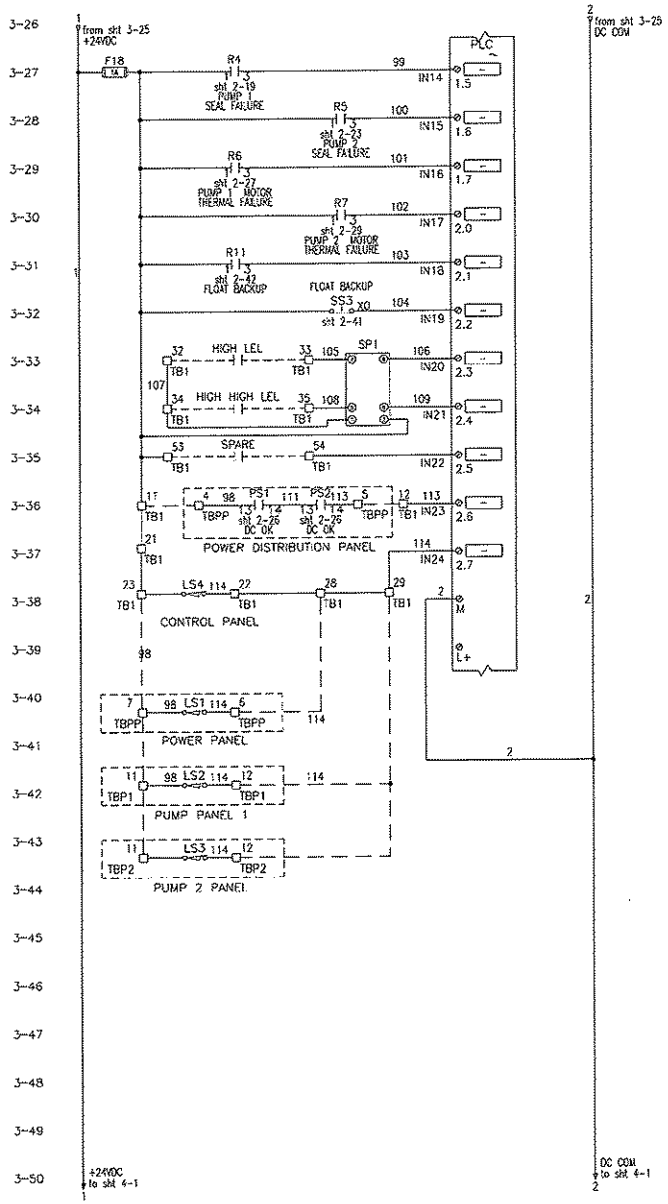

REVISIONS	BY

IMPROVEMENTS TO WASTEWATER COLLECTION SYSTEM

LIFT STATION CONSTRUCTION DETAILS

ELECTRICAL STANDARDS

FINAL SUBMITTAL

ECUA EMERALD COAST UTILITIES AUTHORITY

APPROVED BY:

Drawn:	
Designed:	
Checked:	
Date:	MAY '13
Scale:	
Project No:	
Sheet No.	3
	Of 18 Sheets

ALL WORK SHALL BE CONSTRUCTED IN ACCORDANCE WITH THE LATEST EDITION OF THE E.C.U.A. STANDARD SPECIFICATIONS

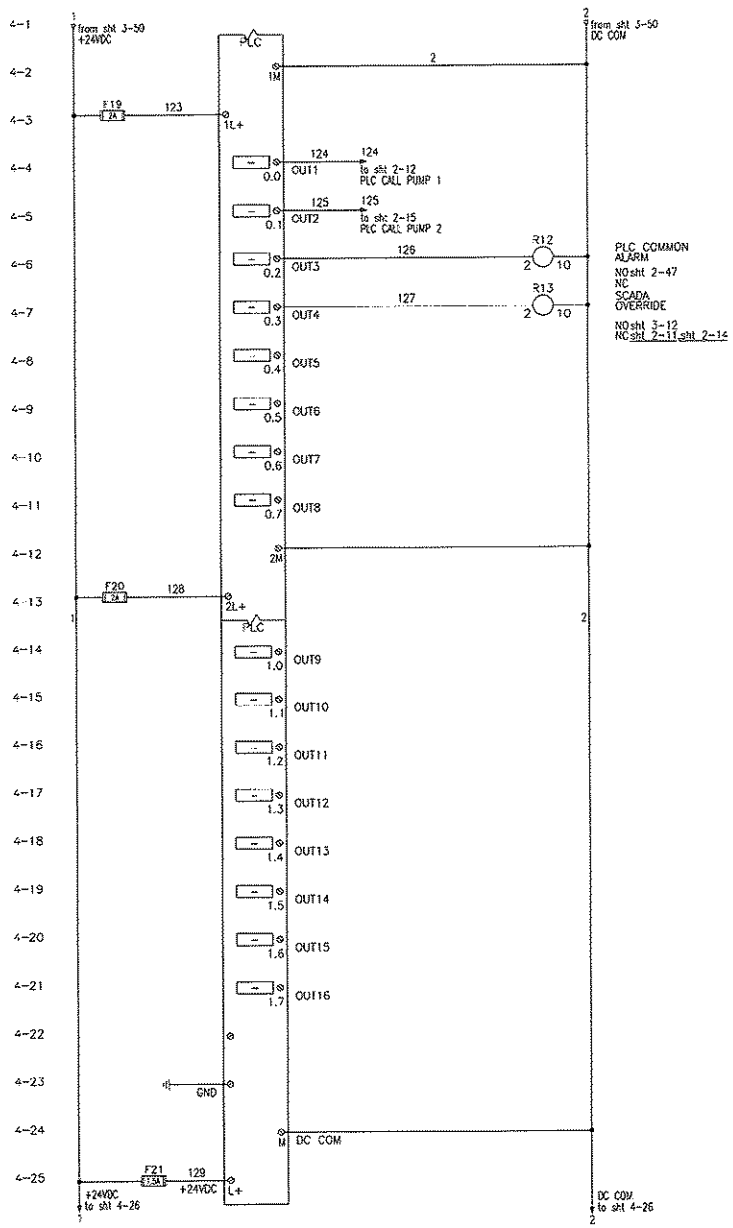

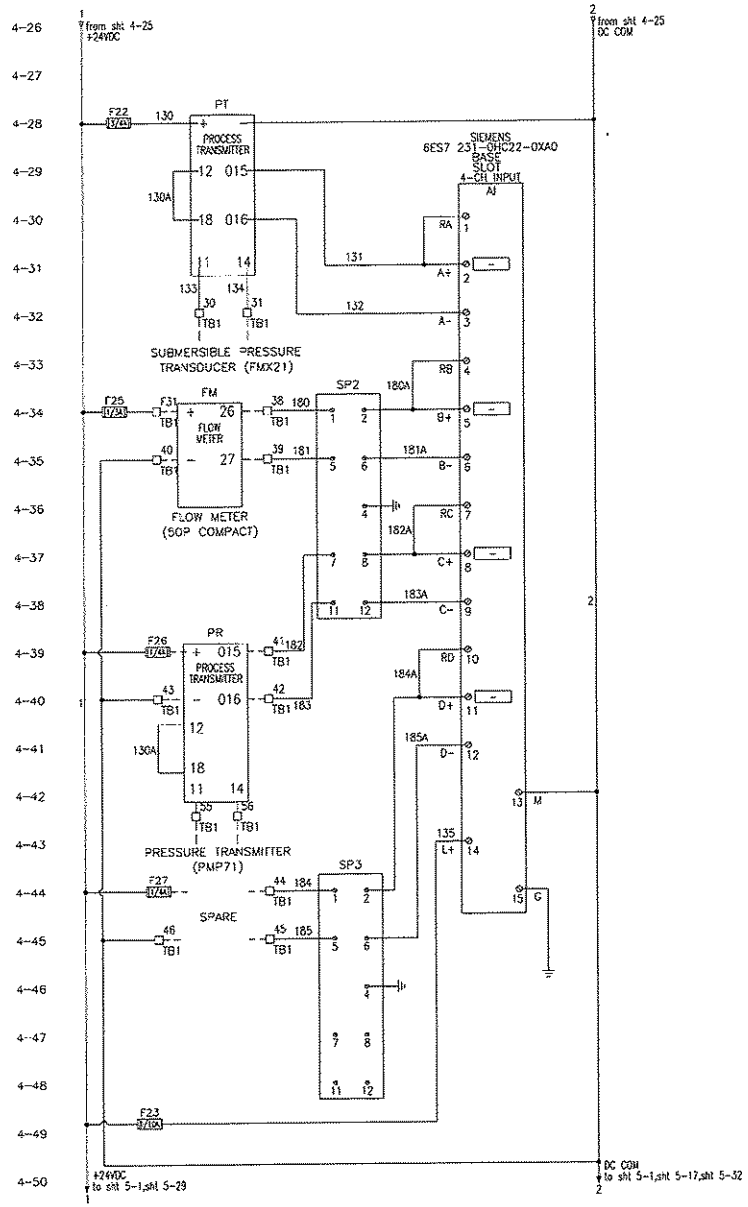

REVISIONS	BY

IMPROVEMENTS TO WASTEWATER COLLECTION SYSTEM

LIFT STATION CONSTRUCTION DETAILS

ELECTRICAL STANDARDS

FINAL SUBMITTAL

EMERALD COAST UTILITIES AUTHORITY

APPROVED BY:

Drawn:	
Designed:	
Checked:	
Date:	MAY '13
Scale:	
Project No:	
Sheet No.	4
	Of 18 Sheets

ALL WORK SHALL BE CONSTRUCTED IN ACCORDANCE WITH THE LATEST EDITION OF THE E.C.U.A. STANDARD SPECIFICATIONS

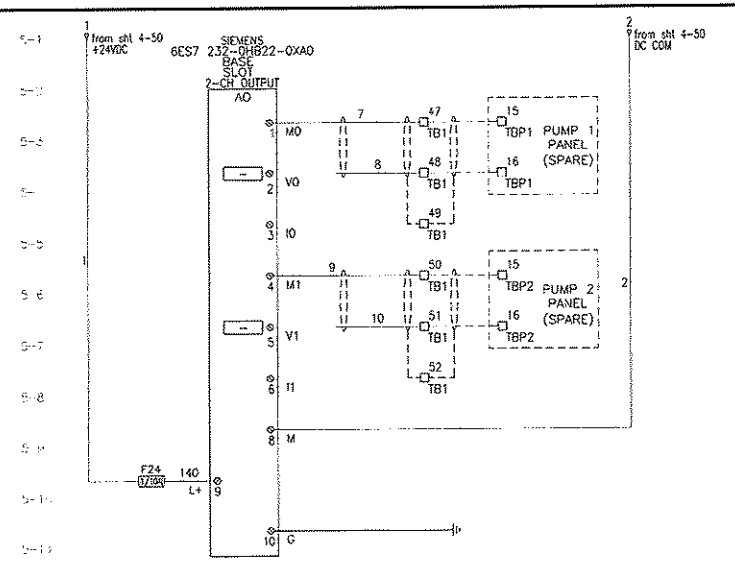

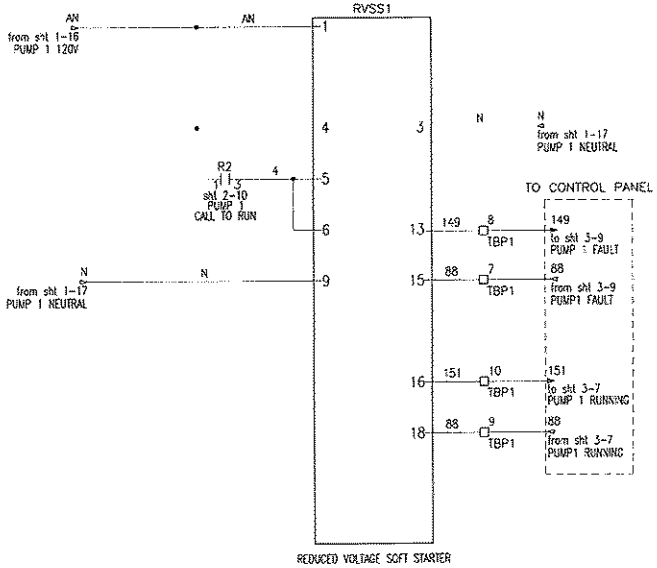

RVSS PARAMETERS
FAULT PARAMETERS -
FAULT RESET = YES

I/O PROGRAMMING PARAMETERS--
FAULT RELAY TYPE = FAILSAFE

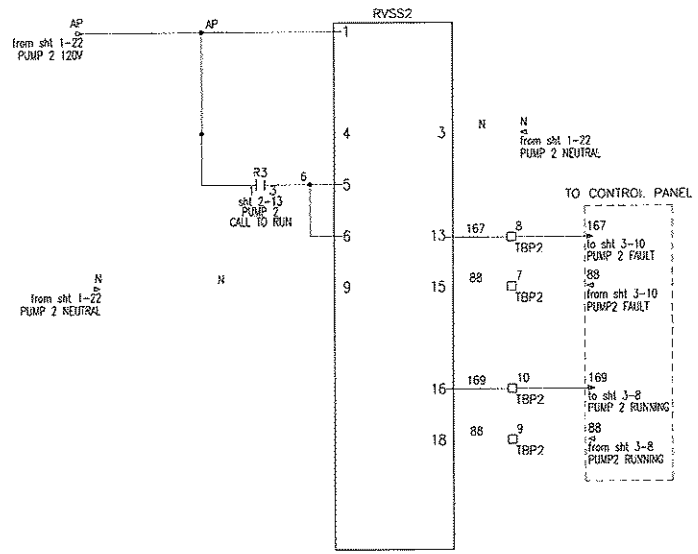

RVSS PARAMETERS
FAULT PARAMETERS -
FAULT RESET = YES

I/O PROGRAMMING PARAMETERS--
FAULT RELAY TYPE = FAILSAFE

REVISIONS	BY

IMPROVEMENTS TO WASTEWATER COLLECTION SYSTEM

LIFT STATION CONSTRUCTION DETAILS

ELECTRICAL STANDARDS

FINAL SUBMITTAL

EMERALD COAST UTILITIES AUTHORITY

APPROVED BY:

Drawn:	
Designed:	
Checked:	
Date:	MAY '13
Scale:	
Project No:	
Sheet No.	5
	OF 18 Sheets

ALL WORK SHALL BE CONSTRUCTED IN ACCORDANCE WITH THE LATEST EDITION OF THE E.C.U.A. STANDARD SPECIFICATIONS

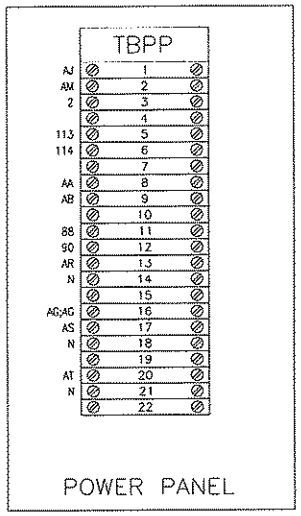

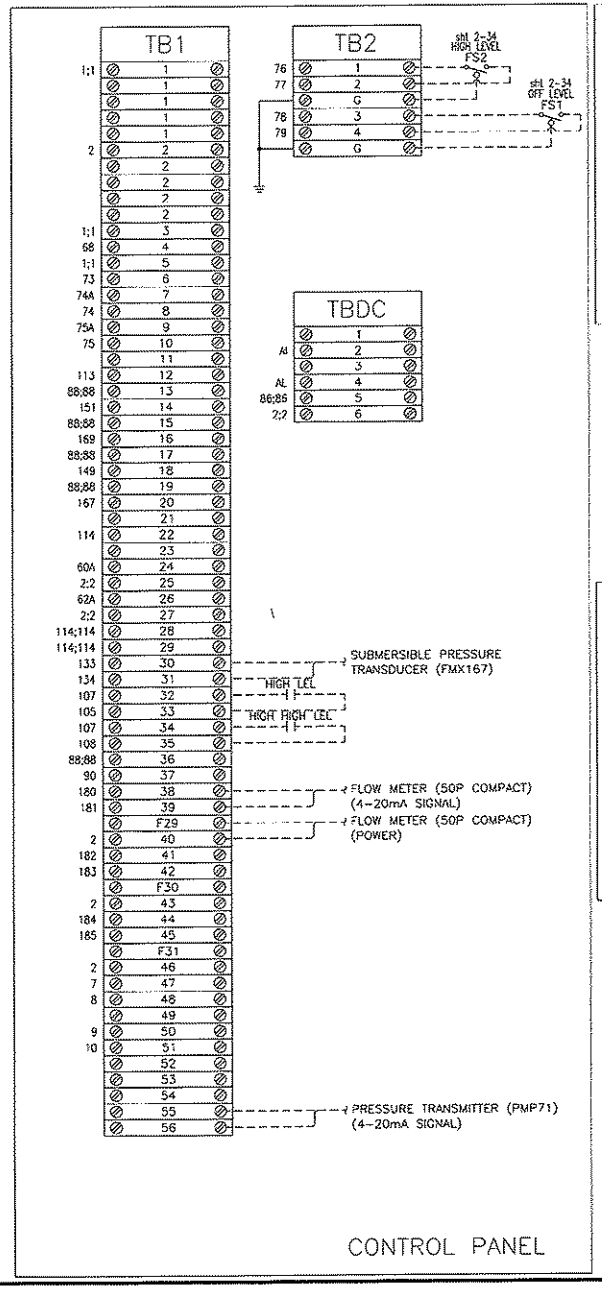

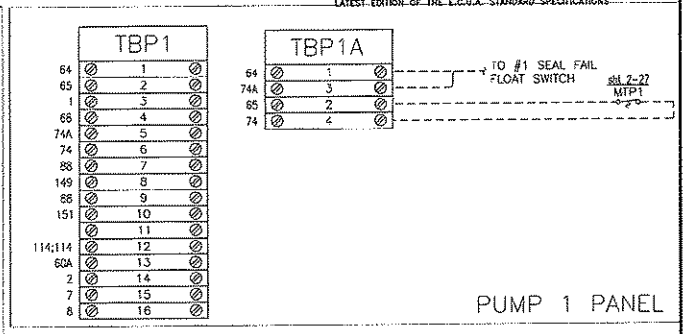

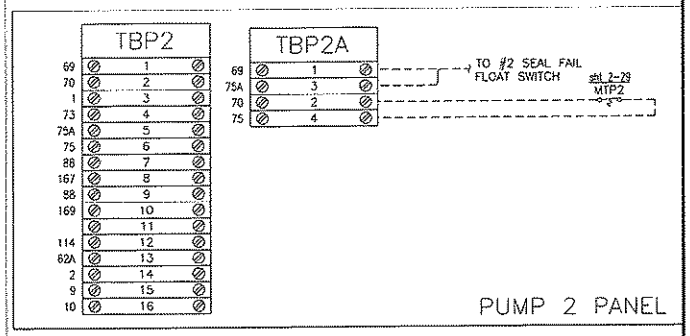

NOTES:

TERMINAL BLOCK DESIGNATIONS:

- TBPP - POWER PANEL TERMINAL BLOCK
- TB1 - CONTROL PANEL TERMINAL BLOCK
- TB2 - INTRINSICALLY SAFE TERMINAL BLOCK
- TBP1 - PUMP 1 TERMINAL BLOCK
- TBP1A - PUMP 1 TERMINAL BLOCK (MOTOR THERMAL AND SEAL FAILURE)
- TBP2 - PUMP 2 TERMINAL BLOCK
- TBP2A - PUMP 2 TERMINAL BLOCK (MOTOR THERMAL AND SEAL FAILURE)

TYPICAL FOR ALL TERMINAL BLOCKS ON THIS DRAWING

USE COPPER CONDUCTORS ONLY
75 DEG C (167 DEG F)
5.3-7.0 LB/IN TIGHTENING TORQUE

REVISIONS	BY

IMPROVEMENTS TO WASTEWATER COLLECTION SYSTEM

LIFT STATION CONSTRUCTION DETAILS

ELECTRICAL STANDARDS

FINAL SUBMITTAL

EMERALD COAST UTILITIES AUTHORITY

APPROVED BY:

Drawn:	
Designed:	
Checked:	
Date:	MAY '13
Scale:	
Project No:	
Sheet No.	6
	Of 18 Sheets

ALL WORK SHALL BE CONSTRUCTED IN ACCORDANCE WITH THE LATEST EDITION OF THE E.C.U.A. STANDARD SPECIFICATIONS

NOTES

1. SEE SHEET 15 FOR SCHEDULES, LEGENDS AND PANEL TAGS.

ATTENTION

THIS LAYOUT IS ONE OF TWO (2) POSSIBLE CHOICES -- SEE SHEET 7 FOR THE OTHER OPTION. IF THIS LAYOUT OPTION IS SELECTED, SEE SHEET 14A FOR ASSOCIATED RACK DETAILS.

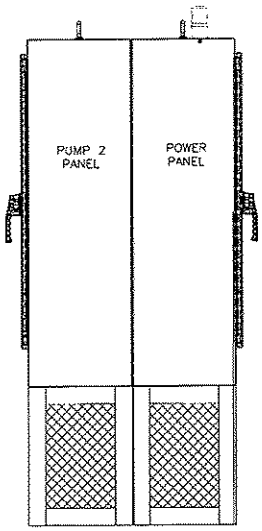

LEFT SIDE

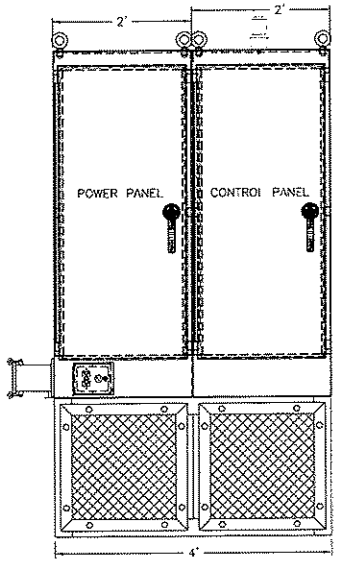

FRONT

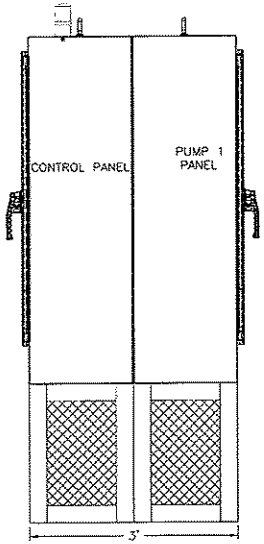

RIGHT SIDE

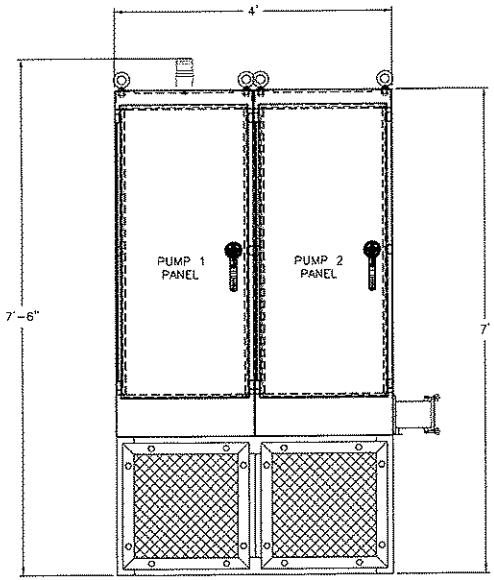

BACK

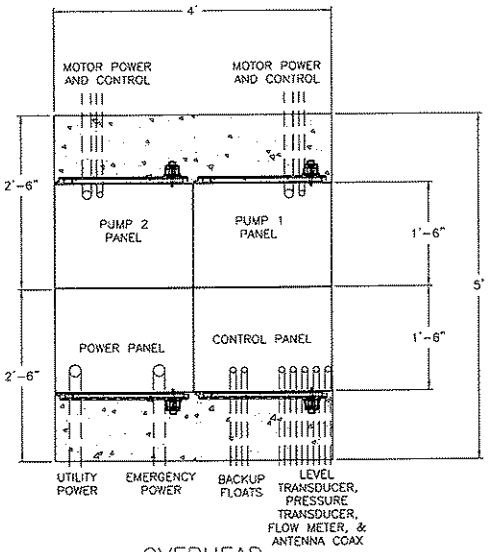

OVERHEAD

REVISIONS	BY

IMPROVEMENTS TO WASTEWATER COLLECTION SYSTEM

LIFT STATION CONSTRUCTION DETAILS

ELECTRICAL STANDARDS

FINAL SUBMITTAL

EMERALD COAST UTILITIES AUTHORITY

APPROVED BY:

Drawn:	
Designed:	
Checked:	
Date:	MAY '13
Scale:	
Project No:	
Sheet No.	7A
	OF 18 Sheets

ALL WORK SHALL BE CONSTRUCTED IN ACCORDANCE WITH THE LATEST EDITION OF THE E.C.U.A. STANDARD SPECIFICATIONS

NOTES

1. SEE SHEET 15 FOR SCHEDULES, LEGENDS AND PANEL TAGS.
2. LAYOUT OF THE POWER & STARTER SECTIONS DEPICTS THE LARGEST POSSIBLE HORSEPOWER CONFIGURATION.

POWER ENCLOSURE LEFT SIDE PANEL LAYOUT

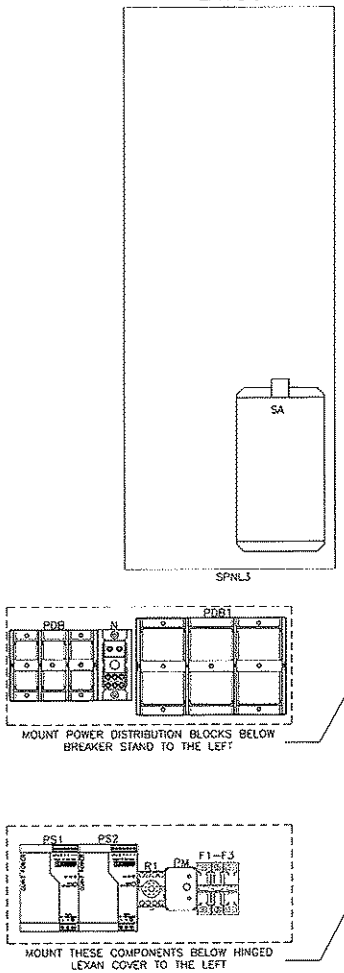

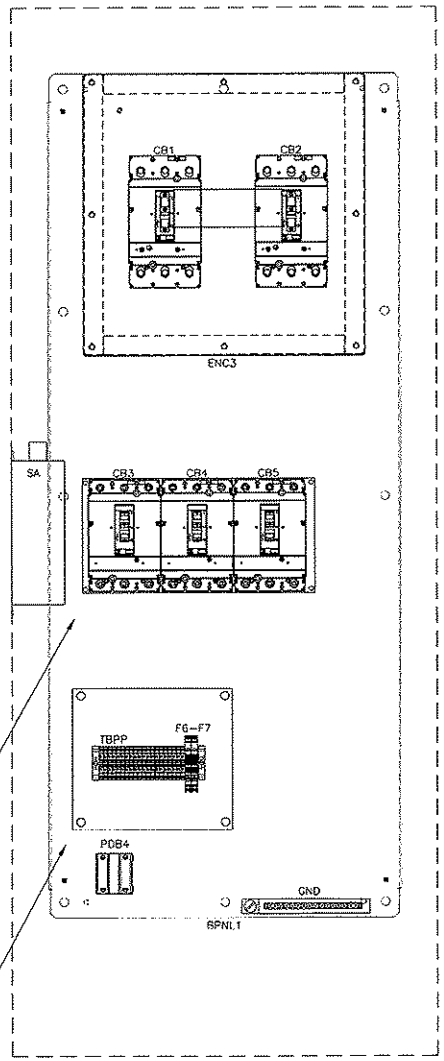

POWER ENCLOSURE BACKPANEL LAYOUT

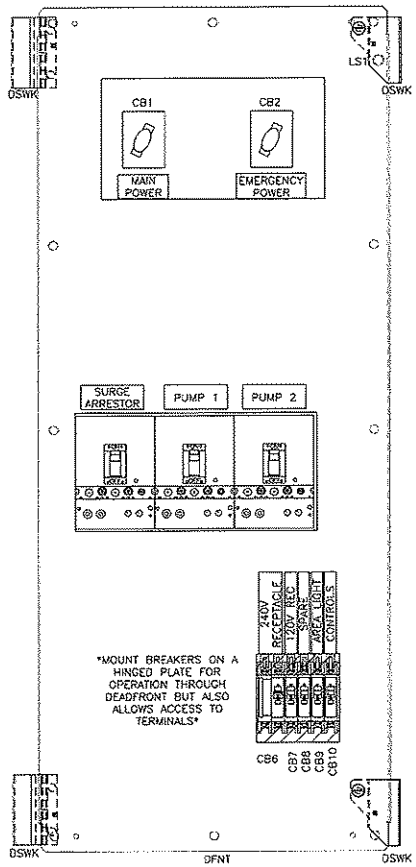

POWER ENCLOSURE DEADFRONT LAYOUT

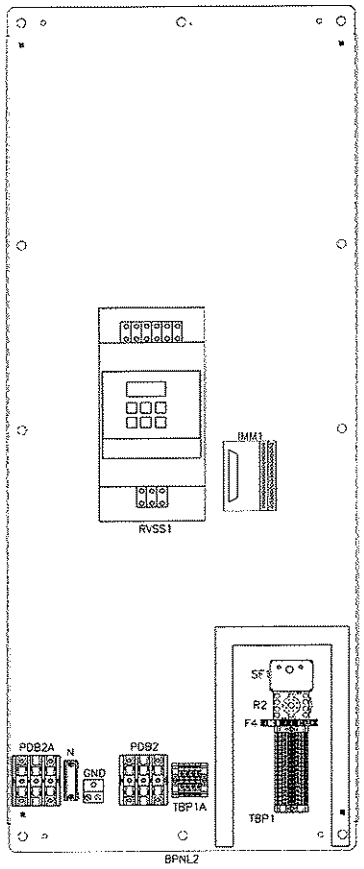

PUMP 1 ENCLOSURE BACKPANEL LAYOUT

REVISIONS	BY

IMPROVEMENTS TO WASTEWATER COLLECTION SYSTEM

LIFT STATION CONSTRUCTION DETAILS

ELECTRICAL STANDARDS

FINAL SUBMITTAL

EMERALD COAST UTILITIES AUTHORITY

APPROVED BY:

Drawn:	
Designed:	
Checked:	
Date:	MAY '13
Scale:	
Project No:	
Sheet No.	8
	OF 18 Sheets

ALL WORK SHALL BE CONSTRUCTED IN ACCORDANCE WITH THE LATEST EDITION OF THE E.C.U.A. STANDARD SPECIFICATIONS

NOTES

1. SEE SHEET 15 FOR SCHEDULES, LEGENDS AND PANEL TAGS.
2. LAYOUT OF THE VFD SECTION DEPICTS THE LARGEST POSSIBLE HORSEPOWER CONFIGURATION.

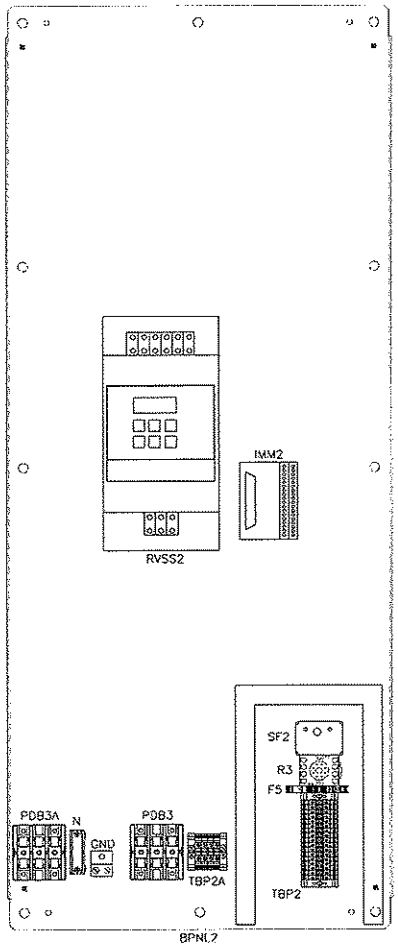

PUMP 2 ENCLOSURE BACKPANEL LAYOUT

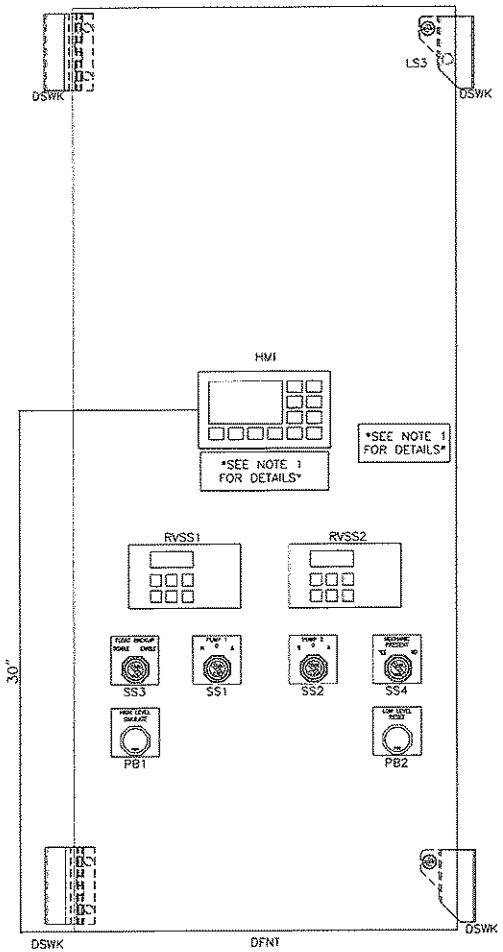

CONTROL ENCLOSURE DEADFRONT LAYOUT

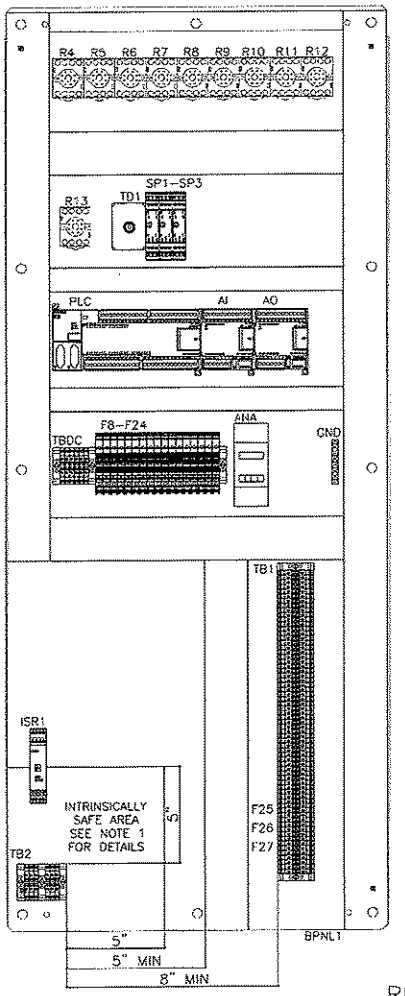

CONTROL ENCLOSURE BACKPANEL LAYOUT

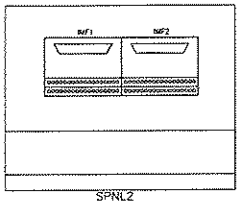

CONTROL ENCLOSURE LEFT SIDEPANEL LAYOUT

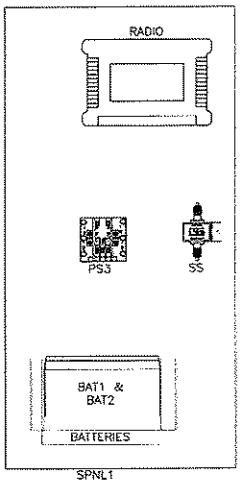

CONTROL ENCLOSURE RIGHT SIDEPANEL LAYOUT

REVISIONS	BY

IMPROVEMENTS TO WASTEWATER COLLECTION SYSTEM

LIFT STATION CONSTRUCTION DETAILS

ELECTRICAL STANDARDS

FINAL SUBMITTAL

EMERALD COAST UTILITIES AUTHORITY

APPROVED BY:

Drawn:	
Designed:	
Checked:	
Date:	MAY '13
Scale:	
Project No:	
Sheet No.	9
OF 18 Sheets	

240-208V RVSS Equipment List

Item	Tag	Panel	Description	Manufacturer	Model	Qty
1	ENC1	All	60X24X18 NEMA 4X SS Enclosure	Hoffman	A60241BSSFSN4	4
2	BPNL1	All	60x24 Painted Steel Backpanel	Hoffman	A60P24F1	4
3	SPNL1	Control	28"H x 12"W Aluminum Sidepanel	EWS	Custom	1
4	DFNT	Power & Control	60x24 Aluminum Deadfront Panel	EWS	Custom	2
5	DSWK	Power & Control	Door Swing Kit	Hoffman	ANADFK	2
6	FRM	Power	Expanded Metal Stainless Steel Frame	EWS	SEE DRAWINGS	1
7	PDB	Power	Incoming Power Distribution Block PDB	Square D	9080LBA363101	1
8	PDB	Power	Incoming Power Distribution Block PDB Cover	Square D	9080LB33	1
9	GND	Power	Power Panel Ground Bar	Square D	PK15GTA-L	1
10	ENC3	Power	16"H x 16"W x 8"D Screw Cover Type 3R Enclosure	Hoffman	A16168GSC	1
11	CB1	Power	600V Main Circuit Breaker	Square D	SEE HP TABLE SHEET 11	1
12	CB2	Power	600V Emergency Circuit Breaker	Square D	JDL36200	1
13	CB1,CB2	Power	Mechanical Interlock for H/J Frame Circuit Breakers	Square D	S29369	1
14	CB1,CB2	Power	Door Mounted Rotary Handle for H/J Frame Circuit Breakers	Square D	S29338	2
15	GEN REC	Power	NEMA 4X Generator Receptacle	Appleton	AR20044RS	1
16	GEN REC	Power	NEMA 4X Generator Plug (Ship Loose)	Appleton	AP20044E-RS	1
17	PDB1	Power	Main Power Distribution Block PDB1	Square D	9080LBA365208	1
18	PDB1	Power	Main Power Distribution Block PDB1 Cover	Square D	9080LBS3	1
19	F1-F3	Power	3 Pole Rejection type Fuse Block	Bussmann	BC60339PQ	1
20	F1-F3	Power	1A Rejection Type Fuse, Class CC	Bussmann	KTK-R-1	3
21	F1-F3	Power	Fuse Cover	Bussmann	SAMI-7N	3
22	PM	Power	240V Phase Monitor	Timemark	257B	1
23	PM	Power	600V, 8-Pin Relay Base	ABB	OT08PC	1
24	CB3-CB5	Power	Breaker Stand	EWS	Custom	1
25	CB3	Power	30A 600V 3 Pole Circuit Breaker, Main Surge Arrestor	Square D	HDL36030	1
26	SA	Power	Main Surge Arrestor	SSI	SEE HP TABLE SHEET 11	1
27	CB4, CB5	Power	600V 3 Pole Circuit Breaker, Starter	Square D	SEE HP TABLE SHEET 11	2
28	CB4, CB5	Power	H & J Frame Circuit Breaker Locking System	Square D	S29371	2
29	PDB2A, PDB3A	Pump 1 & 2	Power Distribution Block, (1)#14-2/0.....(4)#14-4 (PDB2A, PDB3A)	Square D	9080LBA362104	2
30	PDB2A, PDB3A	Pump 1 & 2	Power Distribution Block Cover, (1)#14-2/0.....(1)#14-2/0	Square D	9080LB23	2
31	F4, F5	Pump 1 & 2	6A Fuse, RVSS Control Power	Bussmann	AGC-6	2
32	RVSS1, RVSS2	Pump 1 & 2	Reduced Voltage Soft Starter	Solcon	SEE HP TABLE SHEET 11	2
33	RVSS1, RVSS2	Control	Remote keypad for Solcon RVS-DN SoftStarter	Solcon	DISP6640043	2
34	IMM1, IMM2	Pump 1 & 2	FLKM-037 SUB/S Interface Cable Male	Phoenix Contact	2281115	2
35	IMF1, IMF2	Control	FLKM-037 SUB/B Interface Cable Female	Phoenix Contact	2281212	2
36	IMM1, IMM2, IMF1, IMF2	Pump 1, 2 & Control	37 Pin D-Sub Cable, DB-37 Male to DB-37 Female	GC Electronics	45-463	2
37	SPNL2	Control	10"H x 12"W Aluminum Sidepanel	EWS	Custom	1
38	GND	Pump 1 & 2	Motor Ground Lug	NSI	2-DT	2
39	PDB2, PDB3	Pump 1 & 2	Motor Power Distribution Block PDB2&3, (1)#14-2/0.....(1)#14-2/0	Square D	9080LBA362101	2
40	PDB2, PDB3	Pump 1 & 2	Motor Power Distribution Block PDB2&3 Cover	Square D	9080LB23	2
41	CB6-CB9	Power	Hinged Aluminum Bracked for Mounting 240/120V Circuit Breakers through Deadfront	EWS	Custom	1
42	PDB4	Power	240V/120V Power Distribution Block PDB4, (1) #14-2 ... (4) #18-10	Square D	9080LBA361104	1
43	CB6	Power	20A, 240V, 2 Pole Circuit Breaker	Square D	QOU220	1
44	REC1	Power	20A, 250V, 6-20R Receptacle	P&S	5872I	1
45	CB7, CB8	Power	20A, 120V 1 Pole Circuit Breaker	Square D	QOU120	2
46	REC2	Power	120V 20A GFCI Duplex Receptacle NEMA5-20R	P&S	2094-I	1
47	REC1, REC2	Power	Custom Receptacle Cover NEMA 4X S.S.	HOFFMAN	HIDRPSS-MOD	1
48	REC1, REC2	Power	3/4 1G AL FD BOX	Appelton	4CS-1/2	2
49	CB9	Power	15A, 120V, 1 Pole Circuit Breaker	Square D	QOU115	1
50	CB10	Power	10A, 120V, 1 Pole Circuit Breaker	Square D	QOU110	1
51	R1	Power	120V 3PDT General Purpose Relay w/ Indicator Lamp	Potter Brumfield	KRPA-14AN-120	1
52	R1-R13, SF1, SF2	All	11 Pin Relay Base	ABB	NDS-11	15
53	F4 - F7	Pump 1, 2 & Power	Fused Terminal Block w/ 120V Blown Fuse Indication	Allen Bradley	1492-H4	4
54	-	Pump 1, 2 & Power	1492-H4 &HS Fused Terminal Block End Cover	Allen Bradley	1492-N37	4
55	F6, F7	Power	3A Fuse, Power Supply Primary	Bussmann	AGC-3	2
56	PS1, PS2	Power	10A 24VDC Power Supply	Phoenix Contact	2938604	2
57	D1, D2	Power	10A Diode, P1000A	Newark	51R7094	2
58	-	Power	Custom Stand/Lexan Hinged Cover w/Alum Stand for TBPP & Power Supply Fuses	EWS	Custom	1
59	F8-F24	Control	Fused Terminal Block w/ 24VDC Blown Fuse Indication	Allen Bradley	1492-HS	17
60	F8 - F11	Control	10A Fuse, Power Supply Secondary & Batteries	Bussmann	AGC-10	4
61	BAT1, BAT2	Control	12VDC Battery	Power Sonic	PS1290	2
62	PS3	Control	24VDC-15VDC Converter, 2A	Vicor	V1-J12-EY-B1	1
63	RADIO	Control	400MHz Radio	GE MDS	SD04MO	1

240-208V RVSS Equipment List

ALL WORK SHALL BE CONSTRUCTED IN ACCORDANCE WITH THE LATEST EDITION OF THE E.C.U.A. STANDARD SPECIFICATIONS

Item	Tag	Panel	Description	Manufacturer	Model	Qty
64	RADIO	Control	DB9 Male/Male Gender Changer	Office Depot	946660	1
65	RADIO/SS	Control	3 Foot LMR400UF Coaxial Jumper NMale to TNCMale	Tessco	324503	1
66	SS	Control	Coaxial Surge Suppressor, 50-700MHz	Polyphaser	IS-50NX-C1	1
67	-	-	50FT Coaxial Cable, NMale-Nmale, Wireless Solutions 400-07-07-P50 (Ship Loose)	Tessco	370875	1
68	-	-	400MHz Yagi Antenna w/ N Female Connector, MAXRAD MYA4506N (Ship Loose)	Tessci	37634	1
69	-	-	Antenna Tower 5' Base Section, ROHN R-SB25G5 (Ship Loose)	Tessco	64559	1
70	-	-	Antenna Tower 10' Mid Section, ROHN R-25G (Ship Loose)	Tessco	56866	1
71	-	-	Antenna Tower 9' Top Section, ROHN R-25AG2 (Ship Loose)	Tessco	70080	1
72	-	-	21' 1-1/4" S.S. Antenna Mast (Ship Loose)	Bell Steel	023008	1
73	F14, F15	Control	1/4A Fuse, Motor Thermal Inputs	Bussmann	AGC-1/4	2
74	F12, F13, F19, F20	Control	2A Fuse, Radio Power Supply, Radio & Digital Outputs	Bussmann	AGC-2	4
75	SS1, SS2	Control	3 Position Selector Switch, 30MM	Square D	9001SKS43BH2	2
76	R2-R13	Control	24VDC 3PDT General Purpose Relay w/ Indicator Lamp	Potter Brumfield	KRPA-14DN-24	12
77	SF1, SF2	Control	120V Seal Failure Relay	ATC	SPM-120-AAA-10K	2
78	ISR1	Control	Intrinsically Safe Barrier Relay, 24VDC	Pepperl & Fuchs	KFD2-SR2-Ex2.W	1
79	TB2	Control	Terminal Block, Blue TB2	Phoenix Contact	3044115	4
80	TB2	Control	Terminal Block, Blue End Barrier, TB2	Phoenix Contact	3047235	1
81	TB2	Control	Ground Terminal Blocks, TB2	Phoenix Contact	3044128	2
82	PB1, PB2	Control	Push Button, Black 1NO 1NC	Square D	9001SKR1BH13	2
83	SS3, SS4	Control	2 Position Selector Switch, 30MM	Square D	9001SKS11BH2	2
84	TD1	Control	24VDC 0-180 Second Time Delay Relay	Square D	RE48AFM12MW	1
85	TD1	Control	8 Pin Relay Base	ABB	NDS-8	1
86	AL	Control	24VDC Red Alarm Light	Federal Signal	LP3M-012-048R	1
87	F16, F23, F24	Control	1/10A Fuse, Analog Inputs, Analog Outputs & HMI	Bussmann	AGC-1/10	3
88	HMI	Control	TD400C Text Display	Siemens	6AV6 640-0AA00-0AX1	1
89	F17, F18	Control	1A Fuse, Digital Inputs	Bussmann	AGC-1	2
90	PLC	Control	S7-200 Dual Com Port Processor w/ 24 DI & 16 DO Points	Siemens	6ES7 216-2AD23-0XB0	1
91	AI	Control	S7-200 4 Point AI Module	Siemens	6ES7 231-0HC22-0XA0	1
92	AO	Control	S7-200 2 Point AO Module	Siemens	6ES7 232-0HB22-0XA0	1
93	PLC	Control	S7-200 Communication cable PC/PPI RS-232/485	Siemens	6ES7 901-3CB30-0XA0	1
94	SP1-SP3	Control	Plug In DI Surge Suppression, PT 4x1...DC	Phoenix Contact	2838322	3
95	SP1-SP3	Control	Terminal Block Base for Plugable Surge Supression, PT 4x1-BE	Phoenix Contact	2839363	3
96	LS1-LS4	Control	Panel Intrusion Switches, N.C. Contacts	NSI	76030PS	4
97	F21	Control	1-1/2A Fuse, PLC Supply	Bussmann	AGC-1-1/2	1
98	F22	Control	3/4A Fuse, Process Analyzer	Bussmann	AGC-3/4	1
99	PT	Control	Level Transmitter	Endress & Hauser	RMA42AAAM2	2
100	PT	-	Submersible Level Transducer, 20ft Range w/ 60ft Cable & Mounting Clamp (Ship Loose)	Endress & Hauser	FMX21-FE221GGE21APO	1
101	F29-F31	Control	24VDC Fused Terminal Block With Indication	Phoenix Contact	3046090	3
102	F29-F31	Control	1/4A Fuse, Analog Inputs	Bussmann	GMA-250	3
103	F4, F5	Pump 1 & 2	6A Fuse, RVSS Control Power	BUssmann	AGC-6	2
104	TBPP,1,DC,P1,1A,P2 & 2A	All	Terminal Block, Gray 26-10 AWG Wire	Phoenix Contact	3044102	120
105	TBPP,1,DC,P1,1A,P2 & 2A	All	Terminal Block End Barrier	Phoenix Contact	3047028	8
106	TBPP,1,DC,P1,1A,P2 & 2A	All	Terminal Block End Anchor	Phoenix Contact	0800886	17
107	TBP1A, TBP2A	Pump 1 & 2	Terminal Block, Gray 26-8 AWG Wire, TBVFD1A & TBVFD2A	Phoenix Contact	3044131	8
108	GND	Control	Control Panel Ground Bar	Square D	PK5GTA	3
109	-	Pump 1, 2 & Control	Meter Socket (SHIP LOOSE)	Milbank	UAP3566-X-HSP	1
110	-	-	Stainless Steel 60' Float (SHIP LOOSE)	Anchor Scientific	P60NO-SST	2
111	-	-	Insulated Ground Neutral (SHIP LOOSE)	Square D	SN400LA	1
112	-	-	Ground Bar Kit (SHIP LOOSE)	Square D	PKDGTU250	1
113	-	-	NEMA 4A S.S. Disconnect (SHIP LOOSE)	Square D	J250DS	1
114	-	-	Antenna Mast Stabilization Plate (Ship Loose)	EWS	Custom	1
115	-	-	Stainless Steel 'U' Bolt, 2" Pole, 5/16" Diameter Bolt w/ 2-1/2" Threads (SHIP LOOSE)			1
116	-	-	5/16" Stainless Steel Flat Washer for 'U' Bolt (SHIP LOOSE)			2
117	-	-	5/16" Stainless Steel Lock Washer for 'U' Bolt (SHIP LOOSE)			2
118	-	-	5/16" Stainless Steel Nut for 'U' Bolt (SHIP LOOSE)			2
119	-	-	Stainless Steel 'U' Bolt, 1/4" Diameter (SHIP LOOSE)			2
120	-	-	1/4" Stainless Steel 1/4" Nut for 'U' Bolt (SHIP LOOSE)			4
121	-	-	1-1/4" Reduction Bushing for Antenna Tower, ROHN R-TB50 (SHIP LOOSE)	Tessco	36882	1
122	PLC	Control	S7-200 Memory Module	Siemens	6ES7 291BGF230XA0	1
123	N	Power	Incoming Neutral Block	Square D	9080LBA163206	1
124	N	Power	Incoming Neutral Block Cover	Square D	9080LB31	1
125	N	Pump 1 & 2	Neutral Block	Square D	9080LBA161104	2
126	SPNL3	Power	32"X12" Aluminum Sidepanel	EWS	Custom	1
127	FM	Control	Flow Meter	Endress & Hauser	50P Compact	1
128	PR	Control	Pressure Transmitter	Endress & Hauser	PMP71-AAC1PG1RAA	1

REVISIONS	BY

IMPROVEMENTS TO WASTEWATER COLLECTION SYSTEM

LIFT STATION CONSTRUCTION DETAILS

ELECTRICAL STANDARDS

FINAL SUBMITTAL

EMERALD COAST UTILITIES AUTHORITY

APPROVED BY:

Drawn:
Designed:
Checked:
Date: MAY '13
Scale:
Project No:
Sheet No. 10
Of 18 Sheets

ALL WORK SHALL BE CONSTRUCTED IN ACCORDANCE WITH THE LATEST EDITION OF THE E.C.U.A. STANDARD SPECIFICATIONS

Horsepower Related Compontents Equipment List					
Item	Tag	240V Supply		208V Supply	
		Horsepower		Horsepower	
		10	15	10	15
Main Circuit Breaker	CB1	JDL36200	JDL36225	JDL36225	JDL36250
Starter Circuit Breaker	CB4, CB5	HDL36090	HDL36100	HDL36100	HDL36110
Reduced Voltage Soft Starter	M1, M2	RVS-DN-58-400-115-3+M+8+9+D+U-S	RVS-DN-72-400-115-3+M+8+9+D+U-S	RVS-DN-72-400-115-3+M+8+9+D+U-S	RVS-DN-85-400-115-3+M+8+9+D+U-S
Surge Arrestor	SA	SDLA3D1	SDLA3D1	SDLA3Y1	SDLA3Y1

Horsepower Related Power Conductors, CGB's and Hubs					
Conductor Tag		Horsepower (240V)		Horsepower (208V)	
		20	25	20	25
P-01, P-03 & P-04	Description	(3)#3/0	(3)#4/0	(3)#4/0	(3)#250
	Manufacturer	N/A	N/A	N/A	N/A
	Catalog #	N/A	N/A	N/A	N/A
	Length (Ft. Max)	N/A	N/A	N/A	N/A
	Cable Dia (in)	0.584"	0.642"	0.642"	0.711"
	Appleton Connector	(3) -CG-5075	(3) -CG-6275	(3) -CG-6275	(3) -CG-75100
	Connector Range	0.500"-0.625"	0.625"-0.750"	0.625"-0.750"	0.750"-0.875"
	Meyers Hub	(3) 3/4" - STA-2	(3) 3/4" - STA-2	(3) 3/4" - STA-2	(3) 1" - STA-3
P-02A	Description	(1)#6	(1)#4	(1)#4	(1)#4
	Manufacturer	N/A	N/A	N/A	N/A
	Catalog #	N/A	N/A	N/A	N/A
	Length (Ft. Max)	N/A	N/A	N/A	N/A
	Cable Dia (in)	0.254"	0.324"	0.324"	0.324"
	Appleton Connector	(1)-GC-1850	(1)-GC-3150	(1)-GC-3150	(1)-GC-3150
	Connector Range	0.187"-0.312"	0.312"-0.437"	0.312"-0.437"	0.312"-0.437"
	Hub	(1) 1/2" - STA-1	(1) 1/2" - STA-1	(1) 1/2" - STA-1	(1) 1/2" - STA-1
P-02B	Description	(1)#6	(1)#4	(1)#4	(1)#4
	Manufacturer	Southwire	Southwire	Southwire	Southwire
P-05 & P-06	Description	(3)#3/0	(3)#3/0	(3)#3/0	(3)#3/0
	Manufacturer	N/A	N/A	N/A	N/A
	Catalog #	N/A	N/A	N/A	N/A
	Length (Ft. Max)	N/A	N/A	N/A	N/A
	Cable Dia (in)	0.584"	0.584"	0.584"	0.584"
	Appleton Connector	(3) -CG-5075	(3) -CG-5075	(3) -CG-5075	(3) -CG-5075
	Connector Range	0.500"-0.625"	0.500"-0.625"	0.500"-0.625"	0.500"-0.625"
	Hub	(3) 3/4" - STA-2	(3) 3/4" - STA-2	(3) 3/4" - STA-2	(3) 3/4" - STA-2
P-07 & P-09	Description	(3)#4 W/G, TC	(3)#4 W/G, TC	(3)#4 W/G, TC	(3)#2 W/G, TC
	Manufacturer	Houston Wire	Houston Wire	Houston Wire	Houston Wire
	Catalog #	HW 154 00404	HW 154 00404	HW 154 00404	HW 154 00204
	Length (Ft. Max)	19 FT	19 FT	19 FT	19 FT
	Cable Dia (in)	0.97"	0.97"	0.97"	1.13"
	Appleton Connector	(2) - CG-87100	(2) - CG-87100	(2) - CG-87100	(2) - CG-112125
	Connector Range	0.875"-1.000"	0.875"-1.000"	0.875"-1.000"	1.125"-1.250"
	Hub	(2) 1" - STA-3	(2) 1" - STA-3	(2) 1" - STA-3	(2) 1-1/4" - STA-4
P-08 & P-10	Description	(3)#4	(3)#4	(3)#4	(3)#2
	Manufacturer	Southwire	Southwire	Southwire	Southwire

REVISIONS	BY

IMPROVEMENTS TO WASTEWATER COLLECTION SYSTEM

LIFT STATION CONSTRUCTION DETAILS

ELECTRICAL STANDARDS

FINAL SUBMITTAL

ECUA EMERALD COAST UTILITIES AUTHORITY

APPROVED BY:

Drawn:
Designed:
Checked:
Date: MAY '13
Scale:
Project No:
Sheet No. 11
OF 18 Sheets

ALL WORK SHALL BE CONSTRUCTED IN ACCORDANCE WITH THE LATEST EDITION OF THE E.C.U.A. STANDARD SPECIFICATIONS

Power & Control Conductors, CGB's and Hubs

Cable Number	Description	Manufacturer	Catalog Numer	Length (Ft. Max)	Cable Diameter	Appleton Liquidtight Cable Connector	Connector Cable Range	Crouse-Hinds Myers Hub	From Panel/Enclosure	To Panel/Enclosure
P-14	(1) #8 AWG	N/A	N/A	AS REQ'D	N/A	N/A	N/A	N/A	Field	Power Panel
P-15	3-1/C #12 AWG	N/A	N/A	AS REQ'D	N/A	N/A	N/A	N/A	Power Panel	Power Panel
P-16	3-1/C #12 AWG	N/A	N/A	AS REQ'D	N/A	N/A	N/A	N/A	Power Panel	Power Panel
C-01	(16) #14 AWG, Tray Cable	Houston Wire & Cable	HW 151 01416	24 FT	0.68"	(2) - CG-6275	0.625"-0.750"	(2) 3/4" - STA-2	Power Panel	Control Panel
C-02	(16) #14 AWG, Tray Cable	Houston Wire & Cable	HW 151 01416	22 FT	0.68"	(2) - CG-6275	0.625"-0.750"	(2) 3/4" - STA-2	Pump 1 Panel	Control Panel
C-03	(16) #14 AWG, Tray Cable	Houston Wire & Cable	HW 151 01416	19 FT	0.68"	(2) - CG-6275	0.625"-0.750"	(2) 3/4" - STA-2	Pump 2 Panel	Control Panel
C-04	1 Pair #16 SH, Tray Cable	Houston Wire & Cable	HW 120 01601	22 FT	0.33"	(2) - CG-2575	0.250"-0.375"	(2) 3/4" - STA-2	Pump 1 Panel	Control Panel
C-05	1 Pair #16 SH, Tray Cable	Houston Wire & Cable	HW 120 01601	22 FT	0.33"	(2) - CG-2575	0.250"-0.375"	(2) 3/4" - STA-2	Pump 2 Panel	Control Panel
PUMP 1-PWR	Per Mfg Specs	N/A	N/A	N/A	N/A	CG Series based on Mfg Specs	N/A	STA Series based on Mfg Specs	Field	Pump 1 Panel
PUMP 1-MTP	Per Mfg Specs	N/A	N/A	N/A	N/A	CG Series based on Mfg Specs	N/A	STA Series based on Mfg Specs	Field	Pump 1 Panel
PUMP 1-SF	Per Mfg Specs	N/A	N/A	N/A	N/A	CG Series based on Mfg Specs	N/A	STA Series based on Mfg Specs	Field	Pump 1 Panel
PUMP 2-PWR	Per Mfg Specs	N/A	N/A	N/A	N/A	CG Series based on Mfg Specs	N/A	STA Series based on Mfg Specs	Field	Pump 2 Panel
PUMP 2-MTP	Per Mfg Specs	N/A	N/A	N/A	N/A	CG Series based on Mfg Specs	N/A	STA Series based on Mfg Specs	Field	Pump 2 Panel
PUMP 2-SF	Per Mfg Specs	N/A	N/A	N/A	N/A	CG Series based on Mfg Specs	N/A	STA Series based on Mfg Specs	Field	Pump 2 Panel
Float Switch 1	Float Switch Cable	BY OTHERS	N/A	N/A	0.56"	(1) - CG-5050	0.500"-0.625"	(1) 1/2" - STA-1	Field	Control Panel
Float Switch 2	Float Switch Cable	BY OTHERS	N/A	N/A	0.56"	(1) - CG-5050	0.500"-0.625"	(1) 1/2" - STA-1	Field	Control Panel
Pressure Xducer	Pressure Transducer Cable	BY OTHERS	N/A	N/A	0.35"	(1) - G-3150	0.312"-0.437"	(1) 1/2" - STA-1	Field	Control Panel
Antenna COAX	Coaxial Cable	BY OTHERS	N/A	N/A	0.408"	(1) - CG-3750	0.375"-0.500"	(1) 1/2" - STA-1	Field	Control Panel
Comm-1	(37) #18 AWG, Tray Cable	Houston Wire & Cable	HW15001837	20 FT	0.74"	(1) - CG-6275	0.625"-0.750"	(1) 3/4" - STA-2	Control Panel	Pump 1 Panel
Comm-2	(37) #18	Houston Wire & Cable	HW15001837	20 FT	0.74"	(1) - CG-6275	0.625"-0.750"	(1) 3/4" - STA-2	Control Panel	Pump 2 Panel

REVISIONS	BY

IMPROVEMENTS TO WASTEWATER COLLECTION SYSTEM

LIFT STATION CONSTRUCTION DETAILS

ELECTRICAL STANDARDS

FINAL SUBMITTAL

EMERALD COAST UTILITIES AUTHORITY

APPROVED BY:

Drawn:
Designed:
Checked:
Date: MAY '13
Scale:
Project No:
Sheet No. 12
Of 18 Sheets

NOTES:

ALL WORK SHALL BE CONSTRUCTED IN ACCORDANCE WITH THE LATEST EDITION OF THE E.C.U.A. STANDARD SPECIFICATIONS

1) ALL SPARE WIRE WILL BE CLEARLY LABELED WITH THE CABLE NUMBER & A SPARE DESIGNATION ON INDIVIDUAL WIRES. THESE SPARES WILL BE LONG ENOUGH TO REACH ANY POINT IN THE PANEL.
2) SPARE CONDUCTORS SHOULD BE TRIMMED AND HEAT SHRINK SHOULD BE USED TO SECURE THE SPARE CONDUCTORS IN THE CABLE.
3) THE INNER CONNECTING CONDUCTORS BETWEEN THE PANELS ARE CODED AS FOLLOWS: THE FIRST GROUP OF CHARACTER IS THE WIRE NUMBER AND THE SECOND GROUP IS THE COLOR (I.E. 1(BK) SIGNIFIES THAT THE WIRE NUMBER IS 1 AND THE COLOR IS BLACK). WIRE COLOR CODE AS FOLLOWS: BK-BLACK, RD-RED, BU-BLUE, OR-ORANGE, YL-YELLOW, BN-BROWN. FOR COLORS THAT ARE DENOTED AS XX/YY, XX IS THE BASE COLOR AND YY IS THE SPIRAL STRIPE (I.E. RD/BK IS A RED WIRE WITH A BLACK SPIRAL STRIPE).
4) SEE SHEETS 11 & 12 FOR PANEL TO PANEL INNER CONNECTING CONDUCTOR AND CABLE DETAILS.

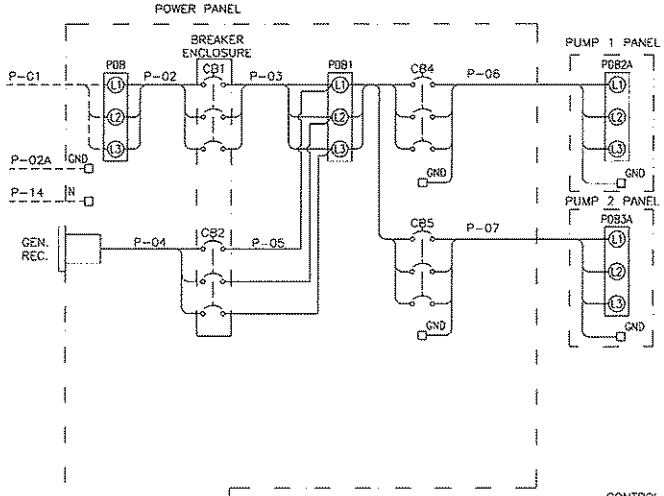

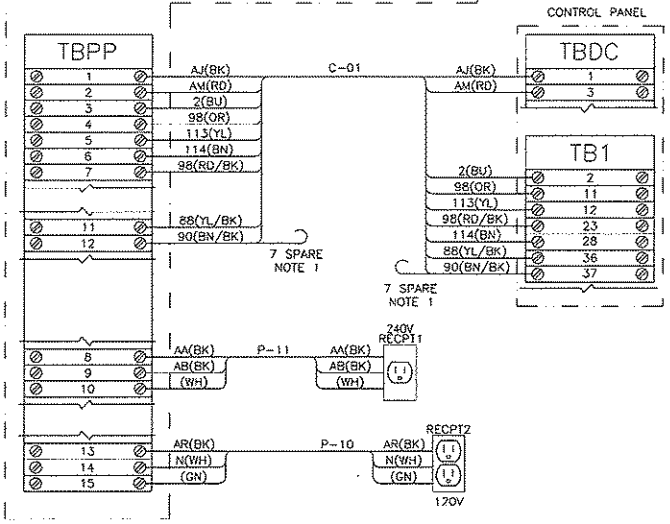

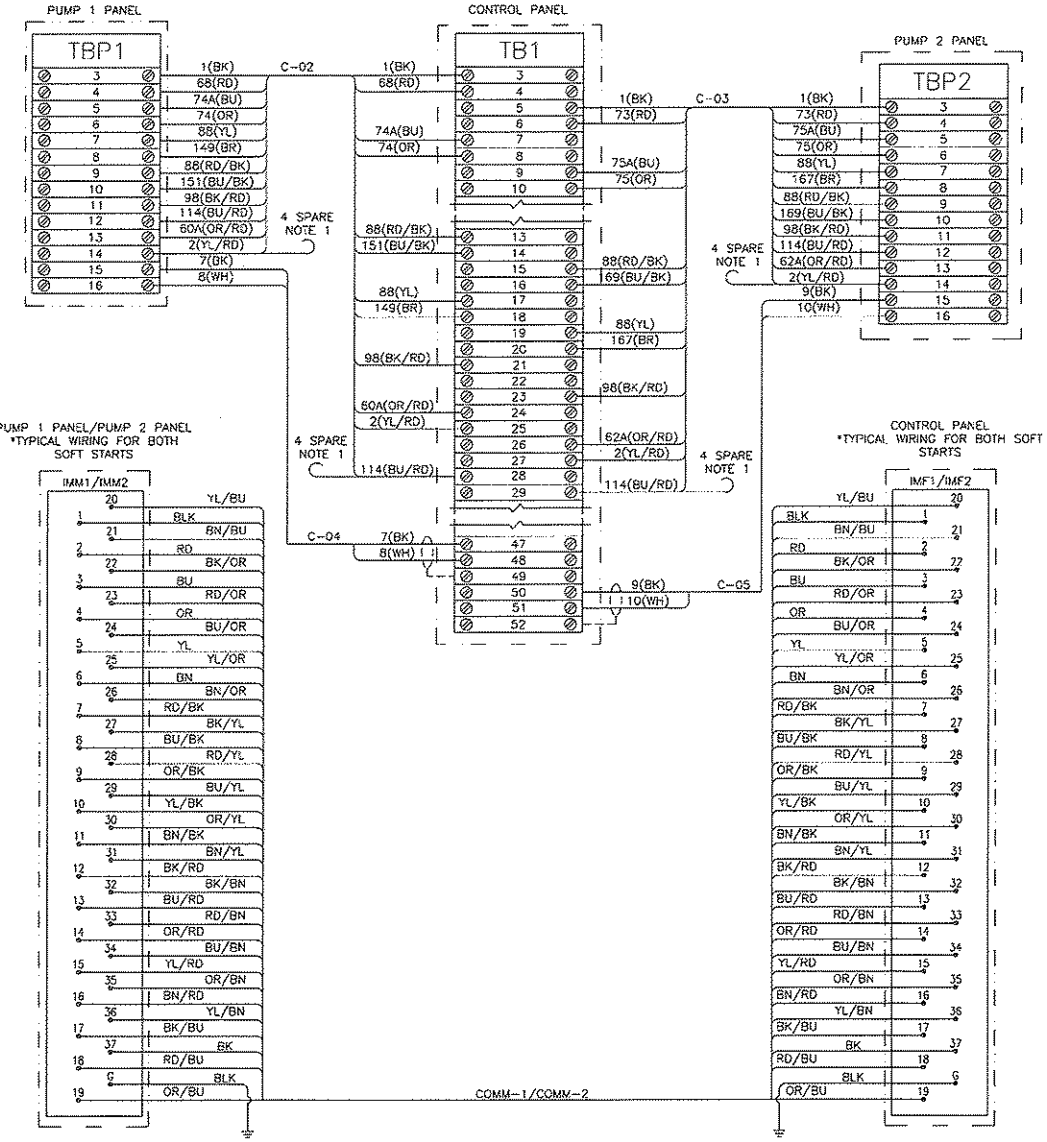

REVISIONS	BY

IMPROVEMENTS TO WASTEWATER COLLECTION SYSTEM

LIFT STATION CONSTRUCTION DETAILS

ELECTRICAL STANDARDS

FINAL SUBMITTAL

EMERALD COAST UTILITIES AUTHORITY

APPROVED BY:

Drawn:	
Designed:	
Checked:	
Date:	MAY '13
Scale:	
Project No:	
Sheet No.	13
	Of 18 Sheets

ALL WORK SHALL BE CONSTRUCTED IN ACCORDANCE WITH THE LATEST EDITION OF THE E.C.U.A. STANDARD SPECIFICATIONS

NOTES:

1. TOP AND BOTTOM OF BASE TO BE LEFT OPEN.
2. DRILL TOP OF BASE TO ATTACH ENCLOSURES AS REQUIRED.
3. DRILL BOTTOM OF BASE TO ATTACH TO SLAB AS REQUIRED.

ATTENTION

THIS LAYOUT IS ONE OF TWO (2) POSSIBLE CHOICES -- SEE SHEET 14A FOR THE OTHER OPTION. IF THIS LAYOUT OPTION IS SELECTED, SEE SHEET 7 FOR ASSOCIATED PANEL LAYOUT DETAILS.

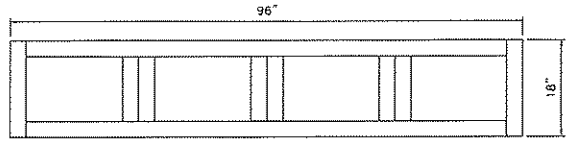

TOP VIEW

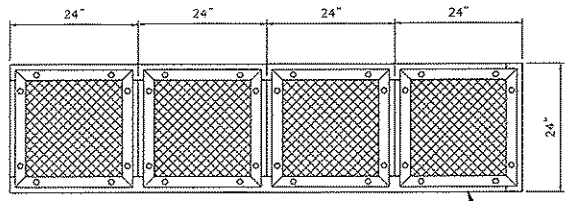

FRONT VIEW

FRONT OF BASE WILL HAVE REMOVABLE PANELS AT EACH OPENING AS SHOWN. ATTACH SCREENS TO BACK SIDE OF REMOVABLE PANELS

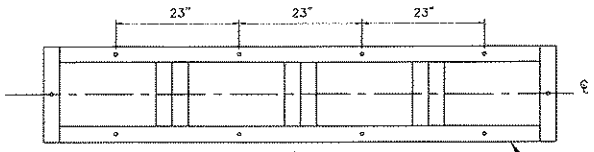

BOTTOM VIEW

DRILL (10) 5/8"ø HOLES AS SHOWN, CENTERED ON ANGLE

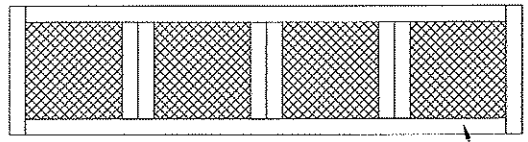

BACK VIEW

ENTIRE BASE MADE FROM 2" STAINLESS STEEL ANGLE, WELDED

REVISIONS	BY

IMPROVEMENTS TO WASTEWATER COLLECTION SYSTEM

LIFT STATION CONSTRUCTION DETAILS

ELECTRICAL STANDARDS

FINAL SUBMITTAL

EMERALD COAST UTILITIES AUTHORITY

APPROVED BY:

Drawn:
Designed:
Checked:
Date: MAY '13
Scale:
Project No:
Sheet No. 14
OF 18 Sheets

ALL WORK SHALL BE CONSTRUCTED IN ACCORDANCE WITH THE LATEST EDITION OF THE E.C.U.A. STANDARD SPECIFICATIONS

Power Panel Fuse Schedule				
Fuse	Type	Voltage	Amps	Description
F1	KTK-R-1	600	1A	Phase Monitor A Phase
F2	KTK-R-1	600	1A	Phase Monitor B Phase
F3	KTK-R-1	600	1A	Phase Monitor C Phase
F10	AGC-3	250	3A	Power Supply 1 Primary
F11	AGC-3	250	3A	Power Supply 2 Primary

Pump 1 Panel Fuse Schedule				
Fuse	Type	Voltage	Amps	Description
F4	FNQ-R-3-1/2	600	3-1/2A	Pump 1 CPT Phase A
F5	FNQ-R-3-1/2	600	3-1/2A	Pump 1 CPT Phase C
F6	FNQ-10	500	10A	Pump 1 CPT Secondary
F32	AGC-6	250	6A	RVSS Control Power

Pump 2 Panel Fuse Schedule				
Fuse	Type	Voltage	Amps	Description
F7	FNQ-R-3-1/2	600	3-1/2A	Pump 2 CPT Phase A
F8	FNQ-R-3-1/2	600	3-1/2A	Pump 2 CPT Phase C
F9	FNQ-10	500	10A	Pump 2 CPT Secondary
F33	AGC-6	250	6A	RVSS Control Power

Control Panel Fuse Schedule				
Fuse	Type	Voltage	Amps	Description
F12	AGC-10	250	10A	Power Supply 1 Secondary
F13	AGC-10	250	10A	Power Supply 2 Secondary
F14	AGC-10	250	10A	Control Power
F15	AGC-10	250	10A	Batteries
F16	AGC-2	250	2A	Radio Power Supply Primary
F17	AGC-2	250	2A	Radio Power Supply Secondary
F18	AGC-1/4	250	1/4A	Pump 1 Motor Thermal
F19	AGC-1/4	250	1/4A	Pump 2 Motor Thermal
F20	AGC-1/10	250	1/10A	Operator Interface
F21	AGC-1	250	1A	Digital Inputs 0.0-1.4
F22	AGC-1	250	1A	Digital Inputs 1.5-2.7
F23	AGC-2	250	2A	Digital Outputs 0.0-0.7
F24	AGC-2	250	2A	Digital Outputs 1.0-1.7
F25	AGC-1-1/2	250	1-1/2A	PLC Power
F26	AGC-3/4	250	3/4A	Process Transmitter Supply
F27	AGC-1/10	250	1/10A	Analog Inputs
F28	AGC-1/10	250	1/10A	Analog Outputs
F29	GMA-1/4	250	1/4A	Analog Input 2
F30	GMA-1/4	250	1/4A	Analog Input 3
F31	GMA-1/4	250	1/4A	Analog Input 4

HMI BUTTON LEGEND
F1 — FAULT RESET/ENABLE INTRUSION
SHIFT+F1 — DISABLE INTRUSION
F2 — ALTERNATE PUMP ASSIGNMENTS
F3 — RESET PUMP 1 RUNTIME
SHIFT+F3 — RESET PUMP 2 RUNTIME
F4 — ALARMS SCREEN
F5 — OVERVIEW SCREEN
F6 — PUMP 1 SCREEN
F7 — PUMP 2 SCREEN
F8 — SETPOINTS SCREEN

CONTROL PANEL ISA INFORMATION TAGS

THIS AREA IN BLUE IS FOR INTRINSICALLY SAFE CIRCUITS AND DEVICES ONLY. THIS AREA INCLUDES A 1.5 INCH DIAMETER IN THE CENTER OF THE BLUE AREA BETWEEN THE BACKPANEL AND THE DIN RAILS AND DOOR INCLUDING THE BOTTOM OF THE ENCLOSURE. ONLY INTRINSICALLY SAFE DEVICES AND WIRING ARE ALLOWED IN THIS AREA. DO NOT ROUTE NON-INTRINSICALLY SAFE WIRING THROUGH THE AREA OF ENCLOSURE.

WARNING

SUBSTITUTION OF COMPONENTS MAY IMPAIR INTRINSIC SAFETY

CONTROL PANEL EXTERIOR TAG INFORMATION

WARNING

TO PREVENT IGNITION OF FLAMMABLE OR COMBUSTIBLE ATMOSPHERES, DISCONNECT POWER BEFORE SERVICING

PROVIDES INTRINSICALLY SAFE GROUNDING VIA DIN RAIL IN CLASS I, GROUPS A, B, C, AND D WHEN CONNECTED PER ELECTRICAL DRAWINGS ON DIN RAIL PANEL

CONTROL PANEL DEAD-FRONT TAG INFORMATION

SECURELY WIRED ALL INNER DOOR LATCHES BEFORE CLOSING OUTER DOOR. FAILURE TO FOLLOW THESE INSTRUCTIONS COULD CAUSE THE OUTER DOOR TO JAM WHEN RE-OPENED

Nameplate Data					
Total Load (FLA)	73	99	127	155	181
Motor Hp	20	30	40	50	60
Motor FLA	27	40	52	65	77

Torque Rating Table					
	Horsepower				
Component	20	30	40	50	60
Incoming Distribution Block (PDB1)	120lb-in/13.5N-m	275lb-in/31.0N-m	275lb-in/31.0N-m	275lb-in/31.0N-m	275lb-in/31.0N-m
Main Ground Block	35lb-in/3.9N-m	35lb-in/3.9N-m	35lb-in/3.9N-m	35lb-in/3.9N-m	35lb-in/3.9N-m
Motor Distribution Block (PDB2 & 3)	40lb-in/4.5N-m	120lb-in/13.5N-m	120lb-in/13.5N-m	120lb-in/13.5N-m	120lb-in/13.5N-m
Motor Ground Block	35lb-in/4.0N-m	45lb-in/5.1N-m	45lb-in/5.1N-m	45lb-in/5.1N-m	45lb-in/5.1N-m

REVISIONS	BY

IMPROVEMENTS TO WASTEWATER COLLECTION SYSTEM

LIFT STATION CONSTRUCTION DETAILS

ELECTRICAL STANDARDS

FINAL SUBMITTAL

ECUA EMERALD COAST UTILITIES AUTHORITY

APPROVED BY:

Drawn:
Designed:
Checked:
Date: MAY '13
Scale:
Project No:
Sheet No. 15
Of 18 Sheets

ALL WORK SHALL BE CONSTRUCTED IN ACCORDANCE WITH THE LATEST EDITION OF THE E.C.U.A. STANDARD SPECIFICATIONS

HAZARDOUS (CLASSIFIED) LOCATION	NON-HAZARDOUS LOCATION
CLASS I, ZONE 0 OR 1, GROUPS IIC, IIB, IIA or CLASS I, DIVISION 1, GROUPS A,B,C,D CLASS II, DIVISION 1, GROUPS E,F,G CLASS III, DIVISION 1	CLASS I, ZONE 2, GROUPS IIC, IIB, IIA or CLASS I, DIVISION 2, GROUPS A,B,C,D

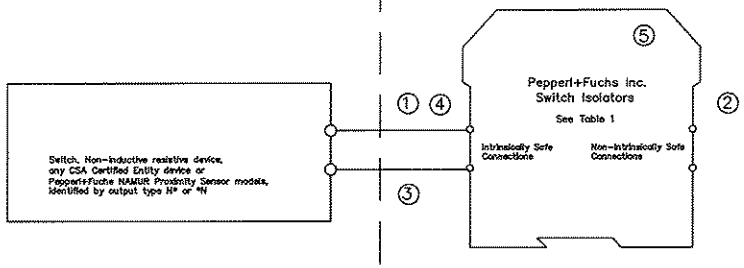

Notes:

① The intrinsically safe wiring must be installed in accordance with the Canadian Electrical Code CSA C22.1, Part 1, Appendix F.

② Barriers listed in Table 1 shall not be connected to any device that uses or generates in excess of 250Vrms or DC unless it has been determined that the voltage is adequately isolated from the barrier. Barriers listed in Table 2 shall not be connected to any device that uses or generates in excess of 60Vrms or DC unless the voltage is limited by an adequate means.

③ Any combination of up to 10 channels of the barriers listed in Table 1 or Table 2 may be connected in parallel and connected to a switch in a hazardous location.

④ The Entity concept allows interconnection of intrinsically safe apparatus with associated apparatus not specifically examined in combination as a system when the approved values of Voc and Isc for the associated apparatus are less than or equal to Vmax and Imax for the intrinsically safe apparatus and the approved values of Ca and La for the associated apparatus are greater than Ci + Ccable and Li + Lcable, respectively, for the intrinsically safe apparatus.

⑤ The following models with part number greater than 100000 are approved for mounting in a Class I, Zone 2, Groups IIC,IIB,IIA or Class I, Division 2, Groups A,B,C,D hazardous (classified) location: KF**-SR2-EX1.W, KF**-SR2-EX1.W.LB, KF**-SR2-EX2.W, KFD2-SR2-EX2.2S, KFD2-ST2-EX1.*, KFD2-ST2-EX2.*, KFD2-SOT2-EX1.*, KFD2-SOT2-EX2.*.

WARNING: Substitution of components may impair intrinsic safety and/or suitability for use in Class I, Division 2, Groups A,B,C,D or Class I, Zone 2, Groups IIC,IIB,IIA.
ADVERTISSEMENT: La substitution de composants peut compromettre la sécurité intrinsèque.

TABLE 1: Barriers Certified to CSA Standard C22.2 No. 157 (Um = 250 V)

Model Numbers	Terminals	SYSTEM V_{max}(V)	SYSTEM Res. (Ω)	ENTITY V_{oc} (V)	ENTITY I_{sc}(mA)	ENTITY C_a(uF) GRPS A,B	ENTITY C_a(uF) GRPS C,E	ENTITY C_a(uF) GRPS D,F,G	ENTITY L_a(mH) GRPS A,B	ENTITY L_a(mH) GRPS C,E	ENTITY L_a(mH) GRPS D,F,G
KFD2-SOT-Ex1*,KFD2-SOT-Ex2* KFD2-SR-Ex1*,KFD2-SR-Ex2* KFD2-SRT-Ex1* KFD2-ST-Ex1*,KFD2-ST-Ex2* KFA5-SR2-Ex1*,KFA5_SR2-Ex2* KFA6-SR2-Ex1*,KFA6-SR2-Ex2* KFD2-SR2-Ex1*,KFD2-SR2-Ex2*	1-3, 2-3; 4-6, 5-6	12.6	650	12.9	19.8	1.273	3.820	10.18	84.88	298.7	744.4
KFA5-SOT2-Ex1*,KFA5-SOT2-Ex2* KFA6-SOT2-Ex1*,KFA6-SOT2-Ex2*	1-3, 2-3; 4-6, 5-6	10.5	811	10.5	13.0	2.66	7.9	21.3	192	671	1000

TABLE 2: Barriers Certified to CSA Standard E79-11 (Um = 60 V)

Model Numbers	Terminals	Load Parameters U_o (V_{oc})	I_o (I_{sc})	C_o(uF) GRPS IIC (A,B)	C_o(uF) GRPS IIB (C,E)	C_o(uF) GRPS IIA (D,F,G)	L_o(mH) GRPS IIC (A,B)	L_o(mH) GRPS IIB (C,E)	L_o(mH) GRPS IIA (D,F,G)
KFD2-SOT2-Ex1*,KFD2-SOT2-Ex2* KFD2-ST2-Ex1*,KFD2-ST2-Ex2*	1-3, 2-3; 4-6, 5-6	10.5	13.0	2.66	7.9	21.3	192	671	1000

No changes without prior permission
CSA
THIS DRAWING CONTAINS PROPRIETARY DATA. NO DISCLOSURE, REPRODUCTION, OR USE OF ANY PART MAY BE MADE EXCEPT BY WRITTEN PERMISSION.

Title: Installation Drawing for CSA Certified Switch Isolators

Revisions	ECO No.				
2-20-2008					
In.	Date	Cons.	Resp.	Appr.	

Pepperl+Fuchs® Inc. Twinsburg, OH 44087-2202 | Repl. No. - | Draw. No. 116-0047j | Sh. 1 of 2

No changes without prior permission
CSA
THIS DRAWING CONTAINS PROPRIETARY DATA. NO DISCLOSURE, REPRODUCTION, OR USE OF ANY PART MAY BE MADE EXCEPT BY WRITTEN PERMISSION.

Title: Installation Drawing for CSA Certified Switch Isolators

Revisions	ECO No.				
2-20-2008					
In.	Date	Cons.	Resp.	Appr.	

Pepperl+Fuchs® Inc. Twinsburg, OH 44087-2202 | Repl. No. - | Draw. No. 116-0047j | Sh. 2 of 2

REVISIONS	BY

IMPROVEMENTS TO WASTEWATER COLLECTION SYSTEM
LIFT STATION CONSTRUCTION DETAILS
ELECTRICAL STANDARDS
FINAL SUBMITTAL

ECUA
EMERALD COAST UTILITIES AUTHORITY

APPROVED BY:

Drawn:
Designed:
Checked:
Date: MAY '13
Scale:
Project No:
Sheet No. 16
OF 18 Sheets

GENERAL ELECTRICAL NOTES

NEW WORK:

1. ENTIRE ELECTRICAL INSTALLATION SHALL BE IN ACCORDANCE WITH THE LATEST EDITION (UNLESS NOTED OTHERWISE) OF THE FOLLOWING CODES AND STANDARDS:
   1.1. NATIONAL ELECTRICAL CODE (NFPA 70).
   1.2. STANDARD FOR FIRE PROTECTION IN WASTEWATER TREATMENT AND COLLECTION FACILITIES (NFPA 820).
2. THE CONTRACTOR SHALL BE RESPONSIBLE FOR READING ALL PROJECT SPECIFICATIONS AND WILL BE RESPONSIBLE FOR MEETING ALL REQUIREMENTS OUTLINED IN THE SPECIFICATIONS.
3. CONTRACTOR SHALL COORDINATE ALL WORK WITH OTHER TRADES PRIOR TO ROUGH-IN AND INSTALLATION.
4. WORKING SPACE FOR ALL ELECTRICAL AND CONTROL EQUIPMENT OPERATING AT 600V VOLTS OR LESS TO GROUND AND LIKELY TO REQUIRE EXAMINATION, ADJUSTMENT, SERVICING, OR MAINTENANCE WHILE ENERGIZED SHALL COMPLY WITH NEC, ARTICLE 110.26.
5. THE ELECTRICAL DESIGN PROVIDES A NUMBER OF BRANCH CIRCUITS, AMPACITY AND OVERCURRENT PROTECTION FOR OTHER DIVISIONS DESIGN BASIS EQUIPMENT CONFORMING TO MANUFACTURER'S SPECIFICATIONS AVAILABLE AT TIME OF DESIGN. THE CONTRACTOR SHALL VERIFY ALL EQUIPMENT LOADS PRIOR TO ROUGH-IN. IF REQUIREMENTS OF EQUIPMENT ACTUALLY PROVIDED UNDER CONTRACT FOR CONSTRUCTION ARE DIFFERENT, CONTRACTOR SHALL MAKE ALL CHANGES NECESSARY WITHOUT INCREASE IN THE CONTRACT AMOUNT. SUCH CHANGES SHALL BE BASED UPON REQUIREMENTS, NAMEPLATE VALUES AND CODE REQUIREMENTS, WHICHEVER IS MORE STRINGENT, AND MAY INCLUDE, BUT ARE NOT LIMITED TO: SIZE OF CONDUCTORS, SIZE OF CONDUIT, QUANTITY OF CONDUCTORS AND CONDUITS, TYPE AND SIZE OF CIRCUIT BREAKER OR DISCONNECT, OVERLOADS, FULL-VOLTAGE STARTERS, REDUCED VOLTAGE SOFT STARTERS, VARIABLE FREQUENCY DRIVES, AND FUSE PROTECTION.
6. THE ELECTRICAL CONTRACTOR IS REQUIRED TO COORDINATE, PROVIDE, AND INSTALL A FULLY OPERATIONAL AND CODE COMPLIANT ELECTRICAL SYSTEM. THIS MAY INCLUDE THE ADDITION OF ELECTRICAL ITEMS NOT SHOWN ON THE ELECTRICAL PLANS, BUT REQUIRED FOR SYSTEM OPERATION.
7. CONTRACTOR SHALL COORDINATE INSTALLATION OF ELECTRICAL SERVICE WITH ELECTRICAL UTILITY COMPANY PROVIDING ELECTRICAL SERVICE TO FACILITY. CONTRACTOR SHALL PAY ALL FEES ASSESSED BY ELECTRICAL UTILITY COMPANY TO PROVIDE ELECTRICAL SERVICE TO FACILITY.
8. CONTRACTOR SHALL EXCAVATE AND CONDUCT DEMOLITION SO AS TO AVOID DAMAGE TO EXISTING UTILITIES AND OTHER UNDERGROUND OR CONCEALED ITEMS. IF EXISTING OR NEW ITEMS ARE DAMAGED, THE CONTRACTOR SHALL NOTIFY THE OWNER AT ONCE OF ALL DAMAGE AND SHALL REPAIR (OR REPLACE IF NECESSARY) TO THE ORIGINAL CONDITION TO THE SATISFACTION OF OWNER AND ENGINEER AT NO CHARGE IN THE CONTRACT AMOUNT.
9. THE CONTRACTOR SHALL BE RESPONSIBLE FOR PROVIDING DETAILED ELECTRICAL AND CONTROL EQUIPMENT LAYOUT DRAWINGS TO THE ENGINEER AND OWNER FOR APPROVAL PRIOR TO INSTALLATION.
10. ALL CONDUITS NOT LOCATED UNDER SLAB SHALL HAVE A MINIMUM BURIAL DEPTH OF 42", UNLESS NOTED OTHERWISE.
11. CONDUITS SHALL BE BURIED 42" (MINIMUM) BELOW GRADE WITH MARKER TAPE 6" ABOVE TOP OF CONDUIT, UNLESS NOTED OTHERWISE.
12. MINIMUM SIZE CONDUIT SHALL BE 1" (UNLESS NOTED OTHERWISE).
13. CONDUIT ROUTINGS AND DEVICE/EQUIPMENT LOCATIONS SHOWN ARE DIAGRAMMATIC ONLY. CONTRACTOR SHALL FIELD ROUTE AND LOCATE AS REQUIRED.
14. CONTRACTOR SHALL PROVIDE PULL BOXES IN POWER CIRCUIT CONDUIT AS REQUIRED TO LIMIT THE NUMBER OF BENDS TO A MAXIMUM OF 270° OR THREE 90° BENDS.
15. ALL WIRE SHALL BE COPPER.
16. ALL ELECTRICAL CIRCUITS SHALL INCLUDE A GREEN GROUNDING CONDUCTOR SIZED PER NEC.
17. CONDUCTORS SHALL BE TERMINATED ON TERMINAL BLOCKS.
18. THE CONTRACTOR SHALL TAG ALL POWER AND CONTROL SYSTEM CABLING AT ALL TERMINATION POINTS.
19. FINAL CONNECTION TO ALL EQUIPMENT IS SHOWN DIAGRAMMATIC. PROVIDE FINAL CONNECTION AS REQUIRED PER MANUFACTURER OF EQUIPMENT.
20. CONTRACTOR SHALL MAINTAIN A SET OF PRINTS AND MARK-UP DURING CONSTRUCTION TO REFLECT "AS-BUILT" CONDITIONS. PRINTS SHALL BE DELIVERED TO THE ENGINEER UPON COMPLETION OF THE PROJECT.
21. ALL HARDWARE SHALL BE STAINLESS STEEL.
22. ALUMINUM CONDUIT SHALL BE COATED WITH (2) WRAPS OF ANTI-CORROSION TAPE OR RUN THROUGH A SCHEDULE 80 PVC SLEEVE TO WHEN IN CONTACT WITH CONCRETE.
23. BARE COPPER SHALL BE COATED WITH (2) WRAPS OF ANTI-CORROSION TAPE OR RUN THROUGH A SCHEDULE 80 PVC SLEEVE TO WHEN IN CONTACT WITH CONCRETE.
24. ENGINEER OF RECORD SHALL BE RESPONSIBLE FOR FINAL SIZING OF ALL EQUIPMENT.

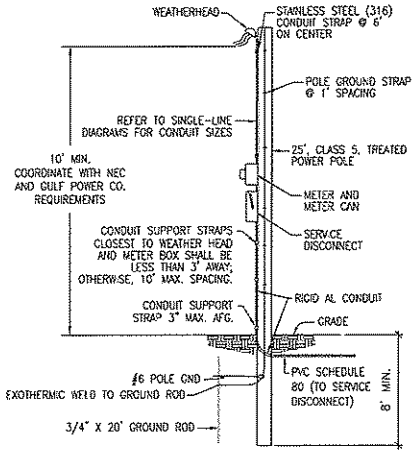

SERVICE LATERAL CONDUIT SHALL BE 3" (MIN) SCHEDULE 80 PVC BELOW GRADE AND 3" (MIN) RIGID AL CONDUIT ABOVE GRADE. ANY REQUIREMENTS BY THE UTILITY COMPANY SHALL PREVAIL OVER THE REQUIREMENTS OUTLINED HERE AND SHALL BE COORDINATED BY THE ELECTRICAL CONTRACTOR PRIOR TO INSTALLATION.

A3 UTILITY POLE DETAIL
NOT TO SCALE

ALL WORK SHALL BE CONSTRUCTED IN ACCORDANCE WITH THE LATEST EDITION OF THE E.C.U.A. STANDARD SPECIFICATIONS

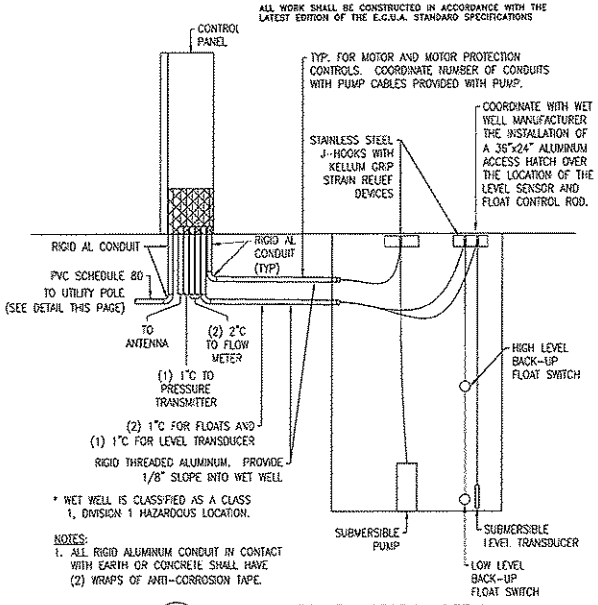

* WET WELL IS CLASSIFIED AS A CLASS 1, DIVISION 1 HAZARDOUS LOCATION.

NOTES:
1. ALL RIGID ALUMINUM CONDUIT IN CONTACT WITH EARTH OR CONCRETE SHALL HAVE (2) WRAPS OF ANTI-CORROSION TAPE.

B4 TYPICAL WET WELL SECTION DETAIL
NOT TO SCALE

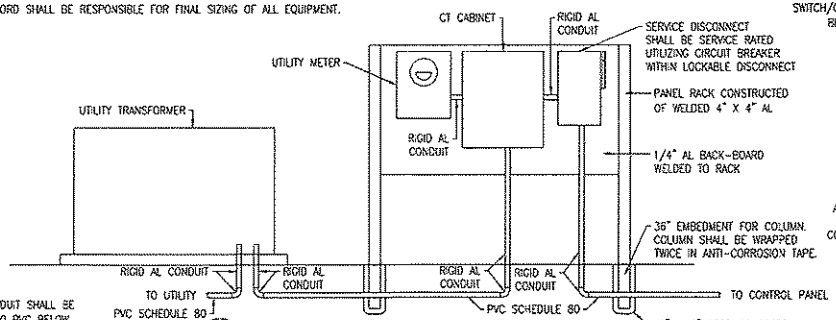

* SERVICE LATERAL CONDUIT SHALL BE 3" (MIN) SCHEDULE 80 PVC BELOW GRADE AND 3" (MIN) RIGID ALUMINUM CONDUIT ABOVE GRADE.

A1 PAD MOUNTED TRANSFORMER UTILITY DETAIL
NOT TO SCALE

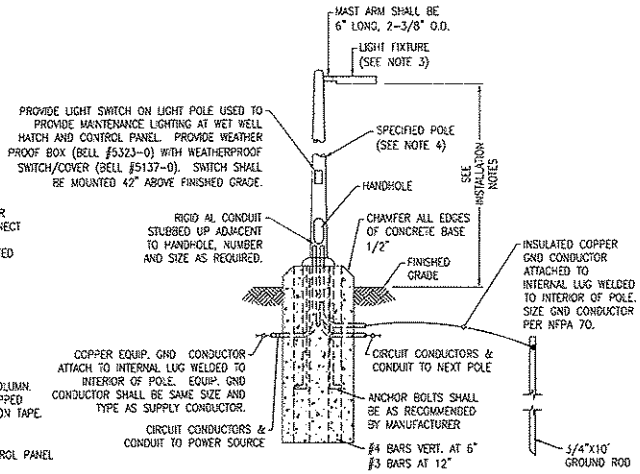

A4 LIGHT POLE INSTALLATION DETAIL
NOT TO SCALE

LIGHTING PERFORMANCE CRITERIA:
1. LIGHTING FIXTURE LAYOUT SHALL BE BASED UPON ACHIEVING 20 FOOT CANDLES (+/- 20%) AT THE FRONT OF THE CONTROL PANEL (WORK-PLANE OF 24" AFG) AND AT THE WET WELL ACCESS HATCH (WORKPLANE OF 0" AFG).
2. GENERAL SECURITY LIGHTING SHALL ENCOMPASS ACCESS GATE AND ALL PIPING/EQUIPMENT AT A MIN: AVERAGE 1 FOOT-CANDLE (+/- 20%, AT WORKPLANE OF 0" AFG).
3. REFER TO LIGHTING CONTROL DIAGRAM ON SHEET No. 18 FOR ADDITIONAL REQUIREMENTS.

LIGHT POLE INSTALLATION NOTES:
1. BURIAL AND DIAMETER DIMENSIONS INDICATED ARE FOR NOMINAL MINIMAL SIZES ONLY. FINAL DIMENSIONS SHALL BE DETERMINED BY A REGISTERED STRUCTURAL ENGINEER IN THE STATE OF FLORIDA BASED UPON FIXTURES PROVIDED. PROVIDE SIGNED, DATED, AND SEALED PLANS FOR EACH INSTALLATION TYPE AND FIXTURE TYPE AS PART OF LIGHTING SUBMITTAL PACKAGE.
2. THE POLE AND FOUNDATION DESIGN SHALL BE BY A DELEGATED PROFESSIONAL ENGINEER TO MEET THE FOLLOWING CRITERIA:
   2.1. DESIGN WIND SPEED 160 MPH WITH A 1.3 GUST FACTOR. EXPOSURE CATEGORY C.
   2.2. SIZE EMBEDMENT FOR A MAXIMUM PERMANENT POLE DEFLECTION AFTER DESIGN WIND SPEED EVENT OF 1.00".
   2.3. ALUMINUM, ROUND OR SQUARE, TAPERED.
3. FIXTURE SHALL BE AMERICAN ELECTRIC LIGHTING AIB2 FIXTURE, 40 LED, 1000mA DRIVER, 120V, TYPE 4, WITH PHOTOCONTROL.
4. REFER TO SPECIFICATIONS SECTION 16521 "EXTERIOR LIGHTING" FOR ADDITIONAL REQUIREMENTS.
5. LIGHT FIXTURES SHALL BE MOUNTED AT 15'-0" (MAXIMUM) ABOVE FINISHED GRADE.

REVISIONS	BY

IMPROVEMENTS TO WASTEWATER COLLECTION SYSTEM
LIFT STATION CONSTRUCTION DETAILS
ELECTRICAL STANDARDS
FINAL SUBMITTAL

ECUA
EMERALD COAST UTILITIES AUTHORITY

APPROVED BY:

Drawn:	
Designed:	
Checked:	
Date:	MAY '13
Scale:	
Project No:	
Sheet No.	17
	Of 18 Sheets

ALL WORK SHALL BE CONSTRUCTED IN ACCORDANCE WITH THE LATEST EDITION OF THE E.C.U.A. STANDARD SPECIFICATIONS

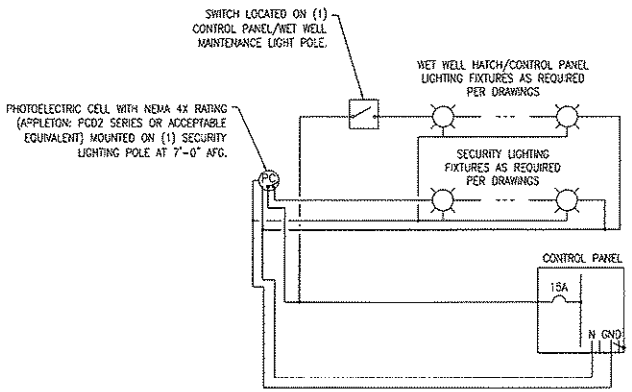

C2 TYPICAL LIGHTING CONTROL DIAGRAM
NOT TO SCALE

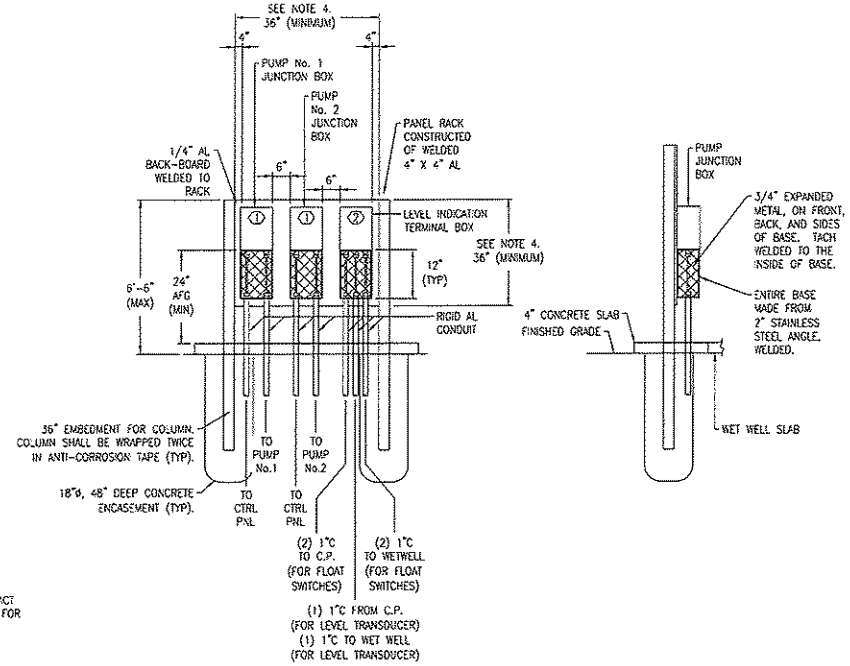

FRONT ELEVATION

SIDE ELEVATION

DETAIL NOTES:

1. THIS DETAIL SHALL ONLY APPLY WHEN THE CONTROL PANEL CANNOT BE PLACED WITHIN 6'-0" OF THE WET WELL TO ALLOW FOR CONNECTION OF STANDARD 50 FOOT PUMP CABLE CONNECTIONS.
2. BACKBOARD SHALL BE PLACED AT THE EDGE OF THE WET WELL SLAB BETWEEN THE WET WELL AND CONTROL PANEL.
3. JUNCTION BOXES SHALL BE MOUNTED SUCH THAT THEY ARE FACING THE WET WELL.
4. ENGINEER/CONTRACTOR SHALL SIZE JUNCTION BOXES AND BACKBOARDS BASED UPON INSTALLATION REQUIREMENTS PROVIDED AT TIME OF DESIGN.

KEY NOTES

① REFER TO "TYPICAL PUMP JUNCTION BOX ELEVATION" (THIS SHEET) FOR ADDITIONAL REQUIREMENTS.

② REFER TO "TYPICAL LEVEL INDICATION JUNCTION BOX ELEVATION" (THIS SHEET) FOR ADDITIONAL REQUIREMENTS.

A4 TYPICAL PUMP JUNCTION BOXES
NOT TO SCALE

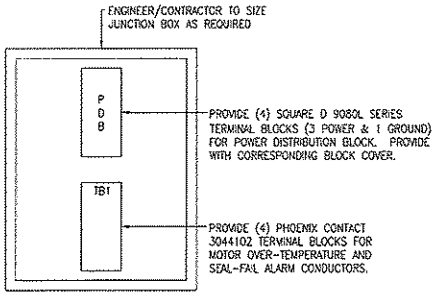

INTERIOR ELEVATION

DETAIL NOTES:

1. ALL TERMINAL BLOCKS SHALL BE PROVIDED WITH CORRESPONDING END BRACKETS AND END COVERS.
2. PROVIDE SEPARATE GROUND LUG IN EACH JUNCTION BOX, BONDED TO JUNCTION BOX.

A1 TYPICAL PUMP JUNCTION BOX ELEVATION
NOT TO SCALE

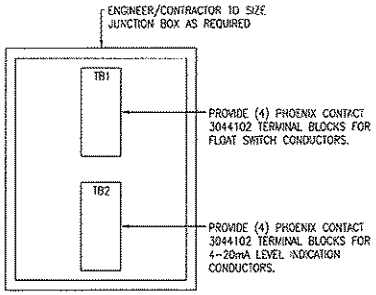

INTERIOR ELEVATION

DETAIL NOTES:

1. ALL TERMINAL BLOCKS SHALL BE PROVIDED WITH CORRESPONDING END BRACKETS AND END COVERS.
2. PROVIDE SEPARATE GROUND LUG IN EACH JUNCTION BOX, BONDED TO JUNCTION BOX.

A3 TYPICAL LEVEL INDICATION JUNCTION BOX ELEVATION
NOT TO SCALE

REVISIONS	BY

IMPROVEMENTS TO WASTEWATER COLLECTION SYSTEM

LIFT STATION CONSTRUCTION DETAILS

ELECTRICAL STANDARDS

FINAL SUBMITTAL

EMERALD COAST UTILITIES AUTHORITY

APPROVED BY:

Drawn:
Designed:
Checked:
Date: MAY '13
Scale:
Project No:
Sheet No. 18
Of 18 Sheets

ALL WORK SHALL BE CONSTRUCTED IN ACCORDANCE WITH THE LATEST EDITION OF THE E.C.U.A. STANDARD SPECIFICATIONS

240-208V 3ø 20HP - 25HP REDUCED VOLTAGE SOFT STARTER ELECTRICAL STANDARD

FOR

EMERALD COAST UTILITY AUTHORITY
ESCAMBIA COUNTY, FL

SHEET NO.	SHEET DESCRIPTION
1	MAIN POWER DISTRIBUTION SCHEMATIC
2	CONTROL SCHEMATIC
3	DIGITAL INPUTS SCHEMATIC
4	DIGITAL OUTPUTS & ANALOG INPUTS SCHEMATIC
5	ANALOG OUTPUTS & STARTER CONTROL SCHEMATIC
6	TERMINAL BLOCK LAYOUT AND FIELD CONNECTIONS
7	LINEAR EXTERIOR PANEL LAYOUT & FIELD CONDUIT REQUIREMENTS
8	POWER & PUMP 1 INTERNAL PANEL LAYOUTS
9	PUMP 2 & CONTROL PANEL INTERNAL LAYOUTS
10	EQUIPMENT LIST
11	HORSEPOWER RELATED EQUIPMENT & POWER CONDUCTORS
12	PANEL TO PANEL CONDUCTORS & EQUIPMENT
13	PANEL TO PANEL WIRING
14	LINEAR STAINLESS STEEL FRAME LAYOUT
15	TABLES, LEGENDS & TAGS
16	ISR INSTRUCTIONS
17	GENERAL NOTES AND DETAILS
18	GENERAL NOTES AND DETAILS

REVISIONS	BY

IMPROVEMENTS TO WASTEWATER COLLECTION SYSTEM

LIFT STATION CONSTRUCTION DETAILS

ELECTRICAL STANDARDS

FINAL SUBMITTAL

ECUA

EMERALD COAST UTILITIES AUTHORITY

APPROVED BY:

Drawn:
Designed:
Checked:
Date: MAY '13
Scale:
Project No:
Sheet No. 0
OF 18 Sheets

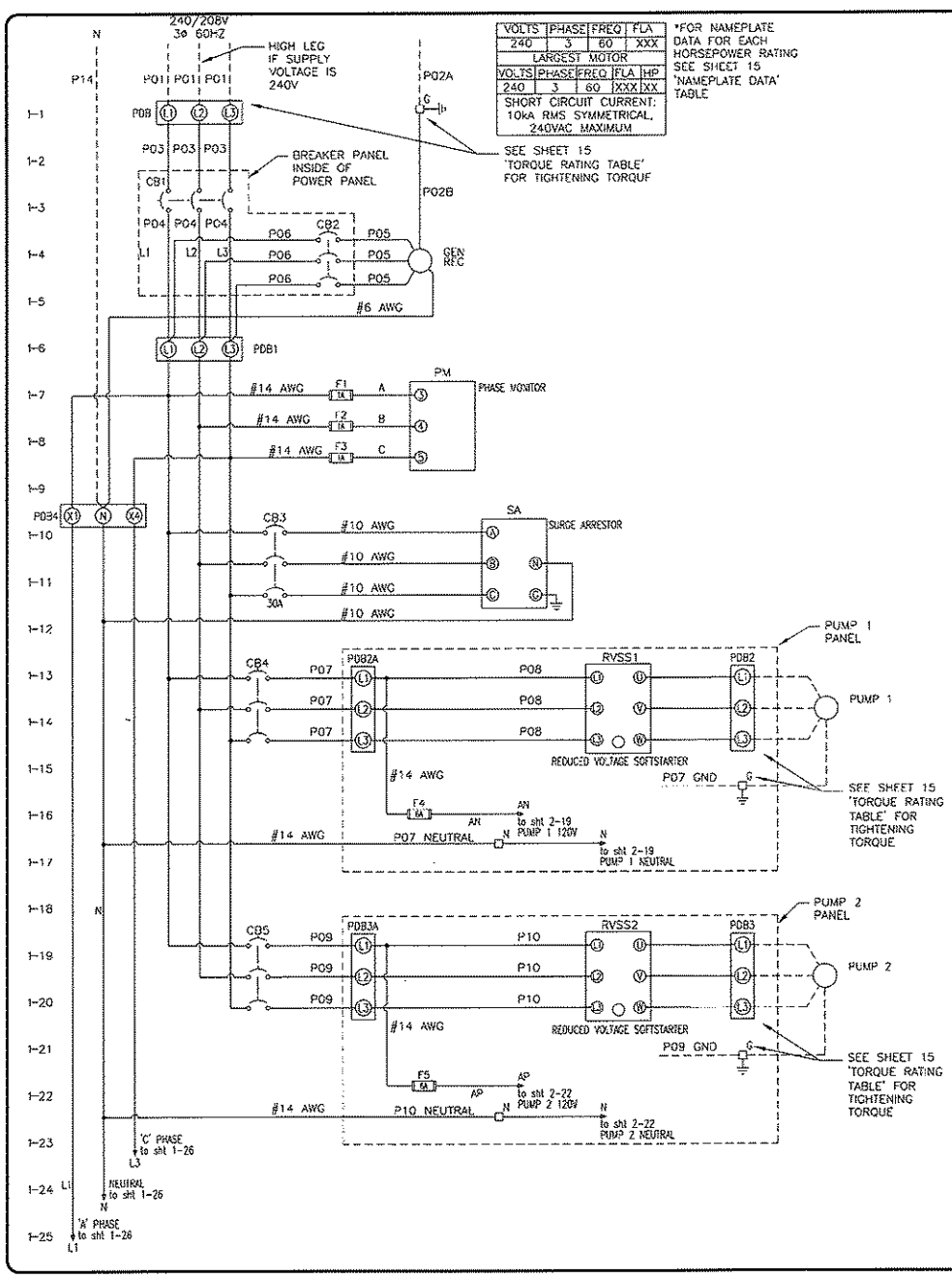

VOLTS	PHASE	FREQ	FLA
240	3	60	XXX
LARGEST MOTOR			
VOLTS	PHASE	FREQ	FLA	HP
240	3	60	XXX	XX
SHORT CIRCUIT CURRENT: 10ka RMS SYMMETRICAL, 240VAC MAXIMUM			

*FOR NAMEPLATE DATA FOR EACH HORSEPOWER RATING SEE SHEET 15 'NAMEPLATE DATA' TABLE

ALL WORK SHALL BE CONSTRUCTED IN ACCORDANCE WITH THE LATEST EDITION OF THE E.C.U.A. STANDARD SPECIFICATIONS

NOTES:

1. THE COMPLETED CONTROL PANEL SHALL BE LABELED AND MANUFACTURED TO MEET U.L. 508A AND 698A CERTIFICATION.
2. CONTROL PANEL WIRING SHALL BE STRANDED COPPER, MINIMUM SIZE #16 AWG WITH 600V 90DEGREE C TYPE THHN INSULATION.
3. CONTROL PANEL WIRING SHALL BE NUMBERED AT BOTH ENDS WITH TYPE WRITTEN, HEAT SHRINKABLE WIRE MARKERS.
4. ALL WIRING WITHIN THE CONTROL PANEL SHALL BE COLOR CODED OR CODED USING ELECTRICAL TAPE IN SIZES WHERE COLORED INSULATION IS NOT AVAILABLE. THE FOLLOWING CODING SHALL BE USED:
   - 4.1. UNGROUNDED AC CONDUCTORS AT SUPPLY VOLTAGE – BLACK
   - 4.2. GROUNDED AC CURRENT CARRYING CONDUCTORS – WHITE
   - 4.3. UNGROUNDED AC CONDUCTORS BELOW SUPPLY VOLTAGE – RED
   - 4.4. UNGROUNDED AC CONTROL CONDUCTORS & CONDUCTORS THAT REMAIN ENERGIZED WHEN THE MAIN DISCONNECT IS OFF – YELLOW
   - 4.5. UNGROUNDED DC CONTROL CONDUCTORS – ORANGE
   - 4.6. GROUNDED DC CURRENT CARRYING CONDUCTORS – BROWN
   - 4.7. INTRINSICALLY SAFE WIRING – BLUE
   - 4.8. GROUND CONDUCTORS – GREEN
5. SEE SHEETS 11 & 12 FOR DETAILS REGARDING ALL POWER CONDUCTORS LABELED PXX.
6. SEE SHEET 11 'HORSEPOWER RELATED COMPONENTS EQUIPMENT LIST' FOR RATINGS OF OVERCURRENT PROTECTION DEVICES.

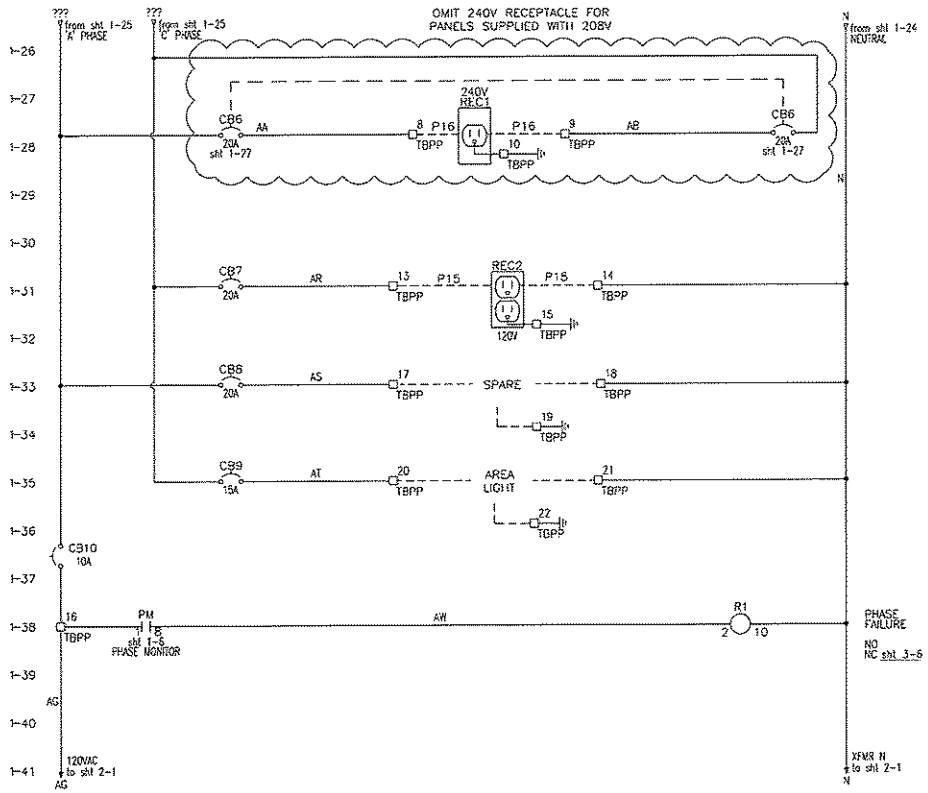

REVISIONS	BY

IMPROVEMENTS TO WASTEWATER COLLECTION SYSTEM

LIFT STATION CONSTRUCTION DETAILS

ELECTRICAL STANDARDS

FINAL SUBMITTAL

EMERALD COAST UTILITIES AUTHORITY

APPROVED BY:

Drawn:	
Designed:	
Checked:	
Date:	MAY '13
Scale:	
Project No:	
Sheet No.	1
	OF 18 Sheets

ALL WORK SHALL BE CONSTRUCTED IN ACCORDANCE WITH THE LATEST EDITION OF THE E.C.U.A. STANDARD SPECIFICATIONS

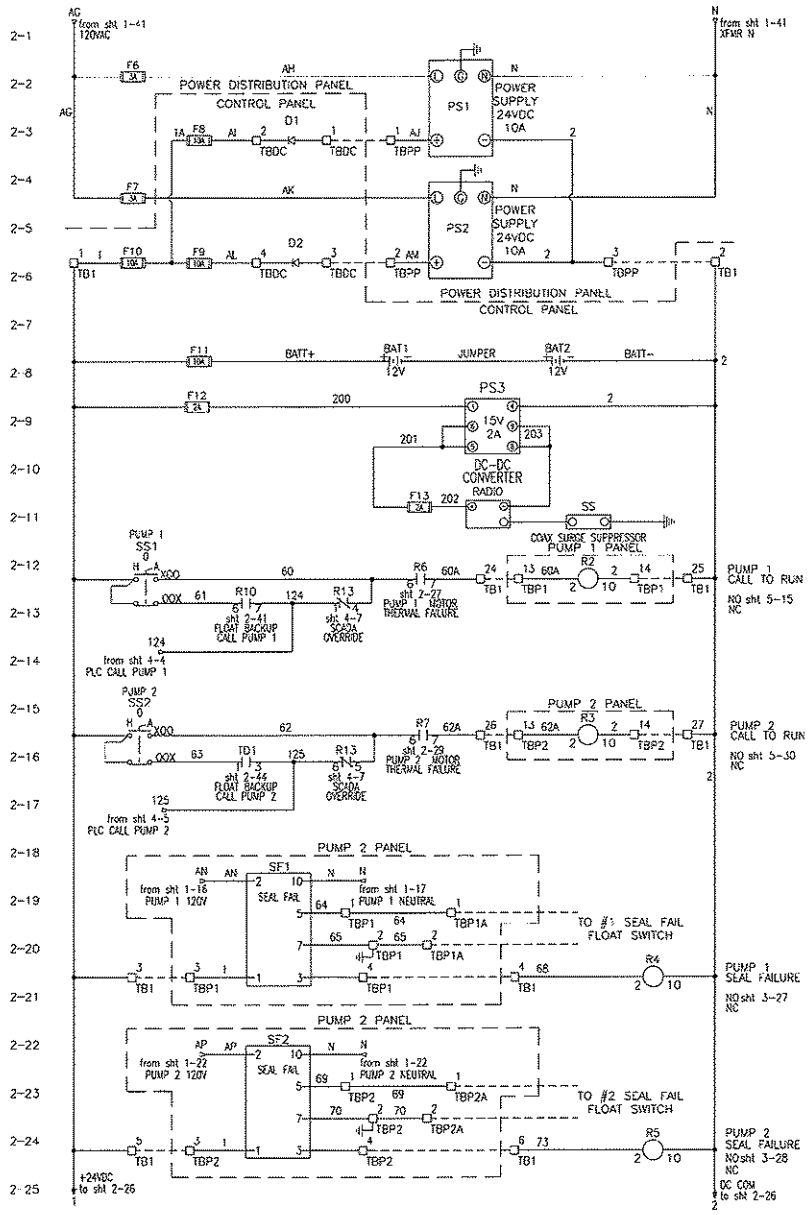

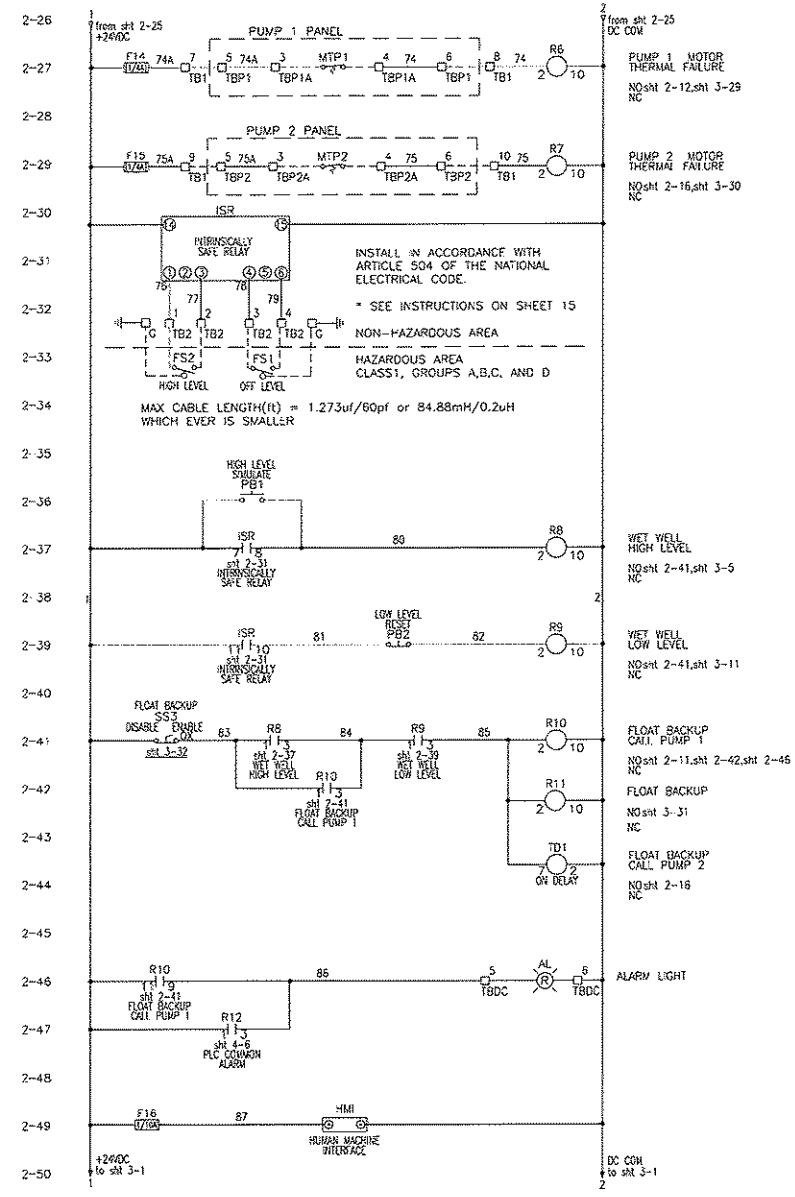

REVISIONS	BY

IMPROVEMENTS TO WASTEWATER COLLECTION SYSTEM

LIFT STATION CONSTRUCTION DETAILS

ELECTRICAL STANDARDS

FINAL SUBMITTAL

EMERALD COAST UTILITIES AUTHORITY

APPROVED BY:

Drawn:	
Designed:	
Checked:	
Date:	MAY '13
Scale:	
Project No:	
Sheet No.	2
	OF 18 Sheets

ALL WORK SHALL BE CONSTRUCTED IN ACCORDANCE WITH THE LATEST EDITION OF THE E.C.U.A. STANDARD SPECIFICATIONS

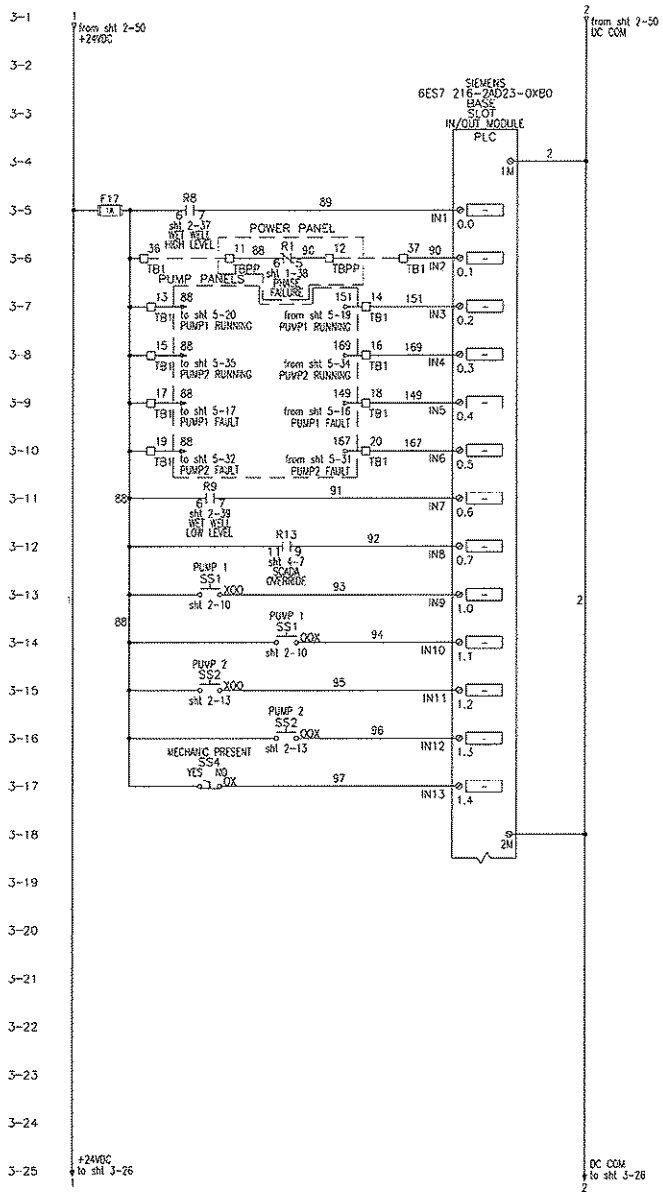

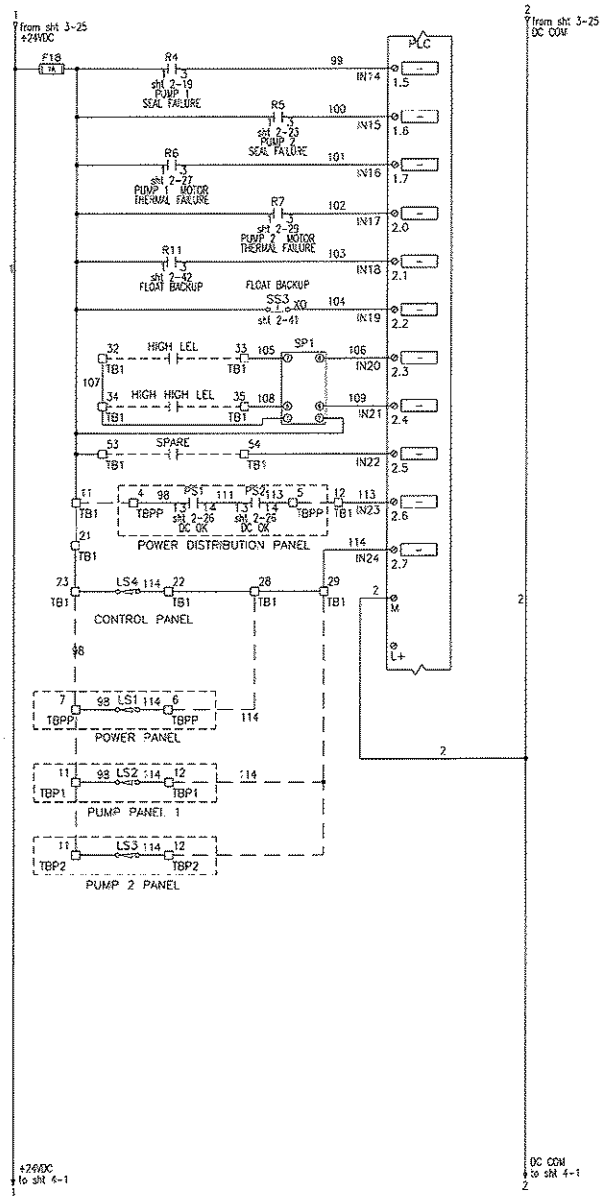

REVISIONS	BY

IMPROVEMENTS TO WASTEWATER COLLECTION SYSTEM

LIFT STATION CONSTRUCTION DETAILS

ELECTRICAL STANDARDS

FINAL SUBMITTAL

EMERALD COAST UTILITIES AUTHORITY

APPROVED BY:

Drawn:
Designed:
Checked:
Date: MAY '13
Scale:
Project No:
Sheet No. 3
OF 18 Sheets

ALL WORK SHALL BE CONSTRUCTED IN ACCORDANCE WITH THE LATEST EDITION OF THE E.C.U.A. STANDARD SPECIFICATIONS

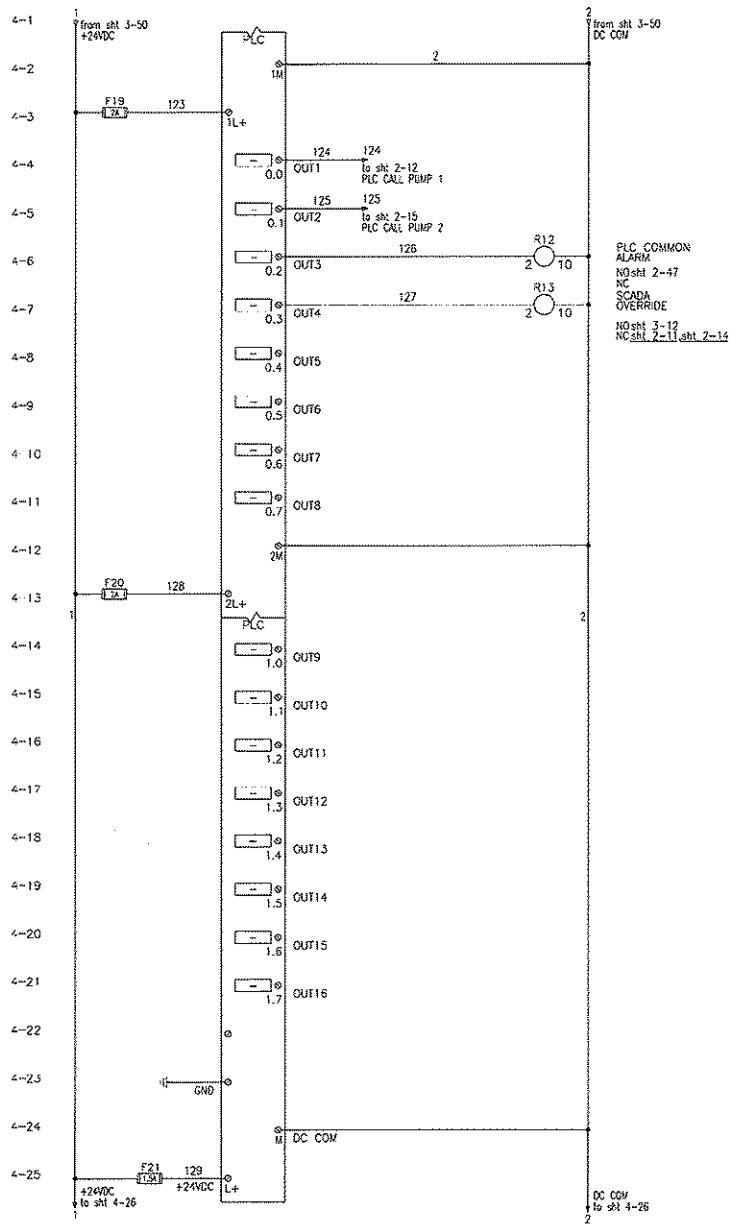

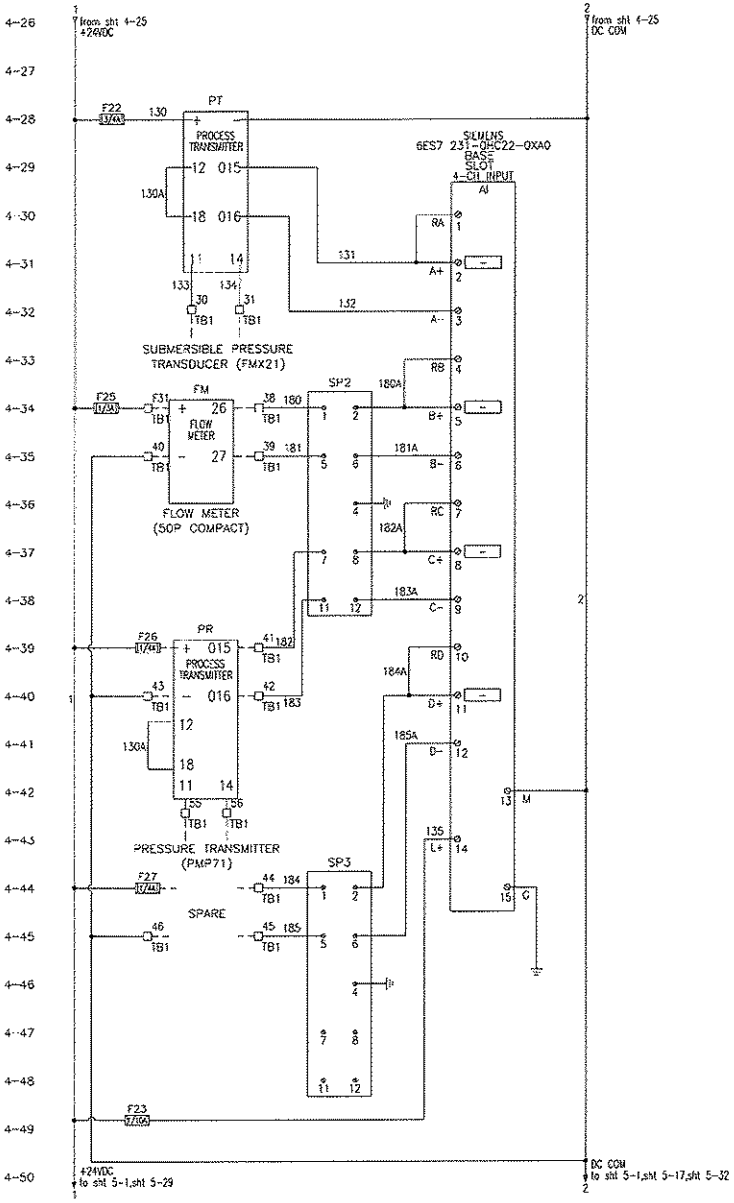

REVISIONS	BY

IMPROVEMENTS TO WASTEWATER COLLECTION SYSTEM

LIFT STATION CONSTRUCTION DETAILS

ELECTRICAL STANDARDS

FINAL SUBMITTAL

EMERALD COAST UTILITIES AUTHORITY

APPROVED BY:

Drawn:
Designed:
Checked:
Date: MAY '13
Scale:
Project No:
Sheet No. 4
Of 18 Sheets

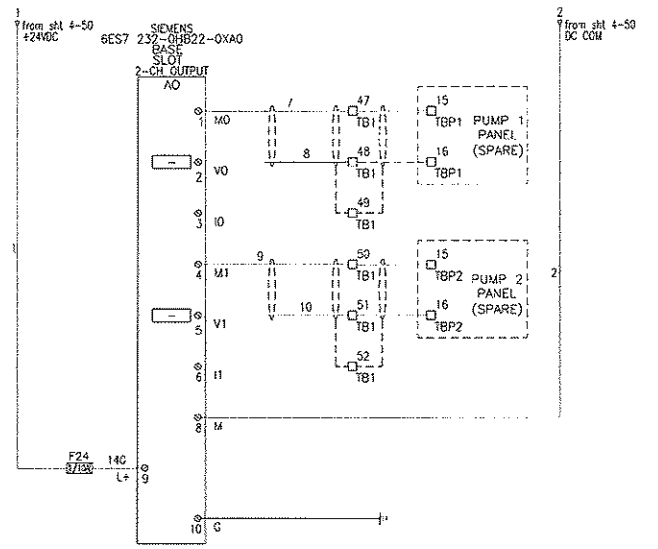

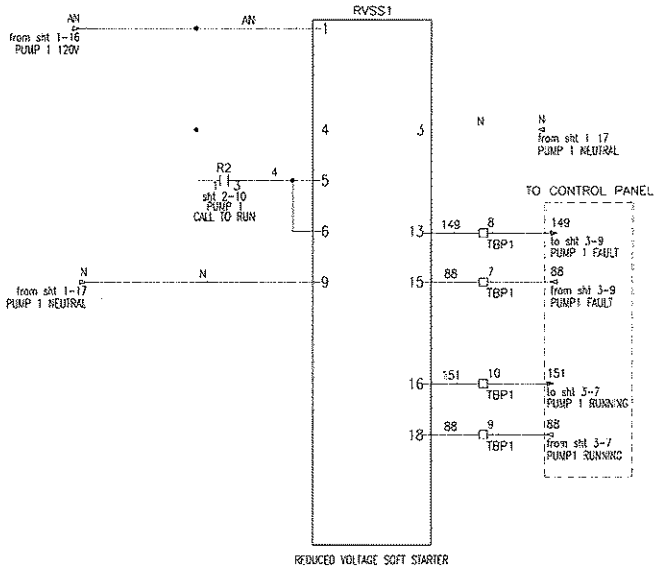

RVSS PARAMETERS
FAULT PARAMETERS -
FAULT RESET = YES

I/O PROGRAMMING PARAMETERS-
FAULT RELAY TYPE = FAILSAFE

ALL WORK SHALL BE CONSTRUCTED IN ACCORDANCE WITH THE LATEST EDITION OF THE E.C.U.A. STANDARD SPECIFICATIONS

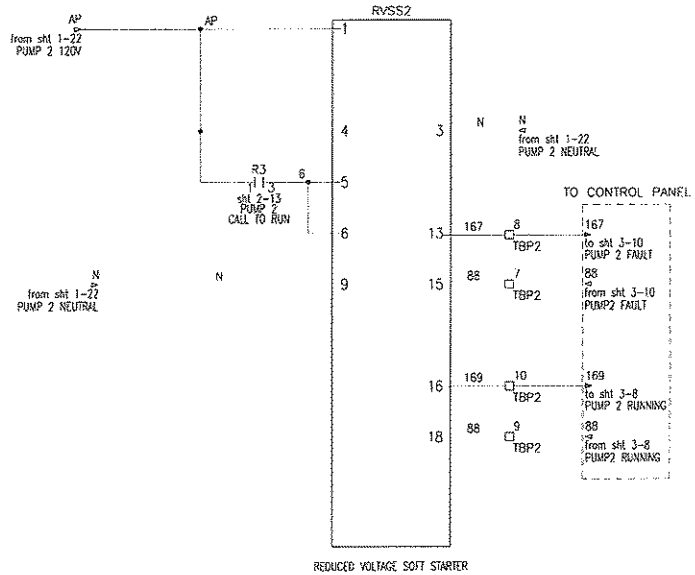

RVSS PARAMETERS
FAULT PARAMETERS -
FAULT RESET = YES

I/O PROGRAMMING PARAMETERS-
FAULT RELAY TYPE = FAILSAFE

REVISIONS	BY

IMPROVEMENTS TO WASTEWATER COLLECTION SYSTEM

LIFT STATION CONSTRUCTION DETAILS

ELECTRICAL STANDARDS

FINAL SUBMITTAL

EMERALD COAST UTILITIES AUTHORITY

APPROVED BY:

Drawn:	
Designed:	
Checked:	
Date:	MAY '13
Scale:	
Project No:	
Sheet No.	5
	Of 18 Sheets

ALL WORK SHALL BE CONSTRUCTED IN ACCORDANCE WITH THE LATEST EDITION OF THE E.C.U.A. STANDARD SPECIFICATIONS

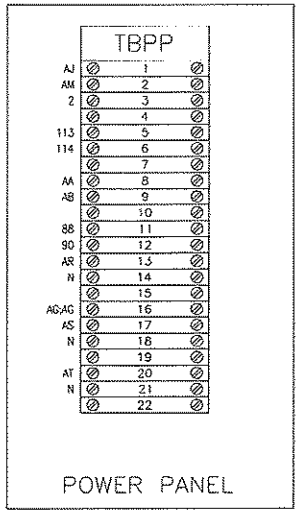

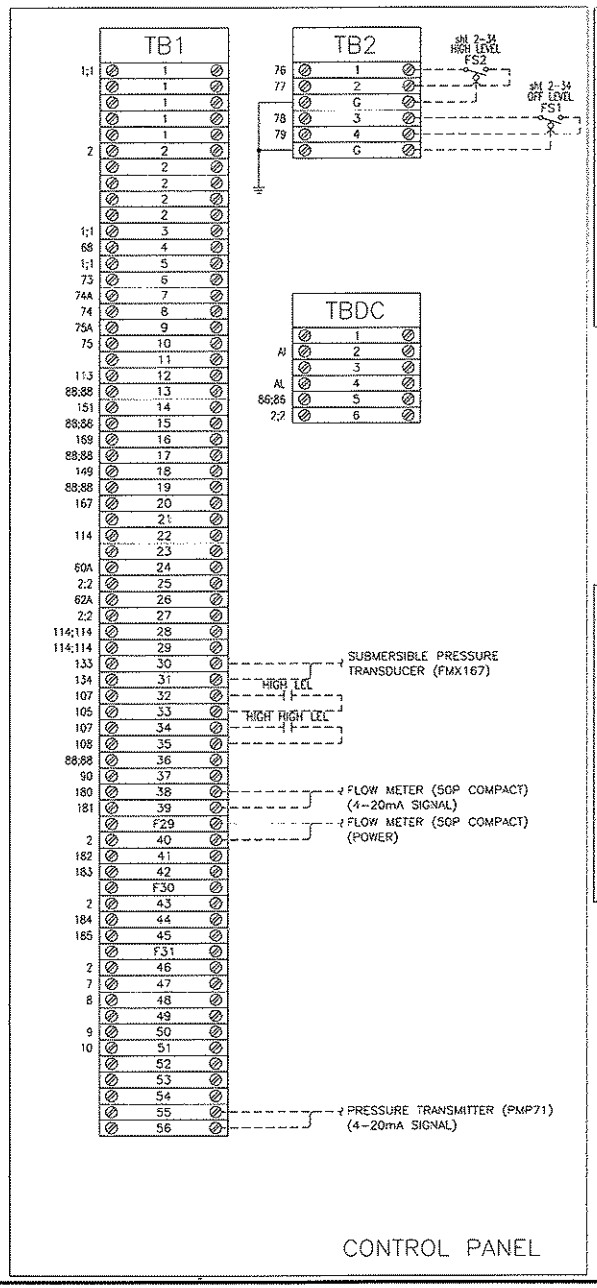

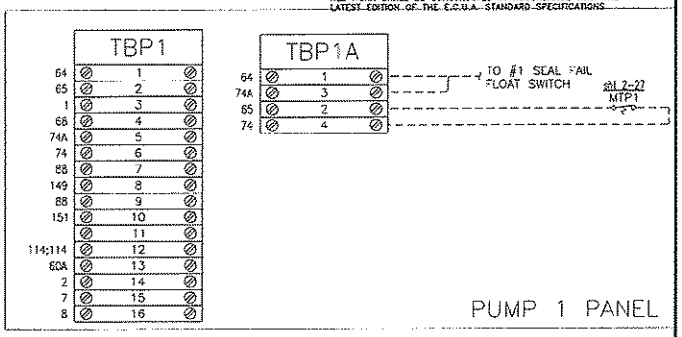

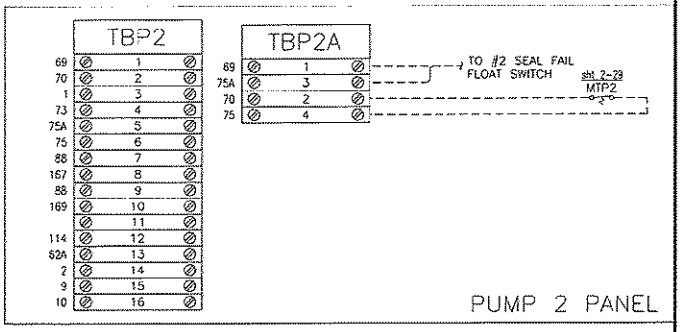

NOTES:

TERMINAL BLOCK DESIGNATIONS:

- TBPP – POWER PANEL TERMINAL BLOCK
- TB1 – CONTROL PANEL TERMINAL BLOCK
- TB2 – INTRINSICALLY SAFE TERMINAL BLOCK
- TBP1 – PUMP 1 TERMINAL BLOCK
- TBP1A – PUMP 1 TERMINAL BLOCK (MOTOR THERMAL AND SEAL FAILURE)
- TBP2 – PUMP 2 TERMINAL BLOCK
- TBP2A – PUMP 2 TERMINAL BLOCK (MOTOR THERMAL AND SEAL FAILURE)

TYPICAL FOR ALL TERMINAL BLOCKS ON THIS DRAWING

USE COPPER CONDUCTORS ONLY
75 DEG C (167 DEG F)
5.3-7.0 LB/IN TIGHTENING TORQUE

REVISIONS	BY

IMPROVEMENTS TO WASTEWATER COLLECTION SYSTEM

LIFT STATION CONSTRUCTION DETAILS

ELECTRICAL STANDARDS

FINAL SUBMITTAL

EMERALD COAST UTILITIES AUTHORITY

APPROVED BY:

Drawn:	
Designed:	
Checked:	
Date:	MAY '13
Scale:	
Project No:	
Sheet No.	6
	OF 18 Sheets

ALL WORK SHALL BE CONSTRUCTED IN ACCORDANCE WITH THE LATEST EDITION OF THE E.C.U.A. STANDARD SPECIFICATIONS

NOTES

1. SEE SHEET 15 FOR SCHEDULES, LEGENDS AND PANEL TAGS.

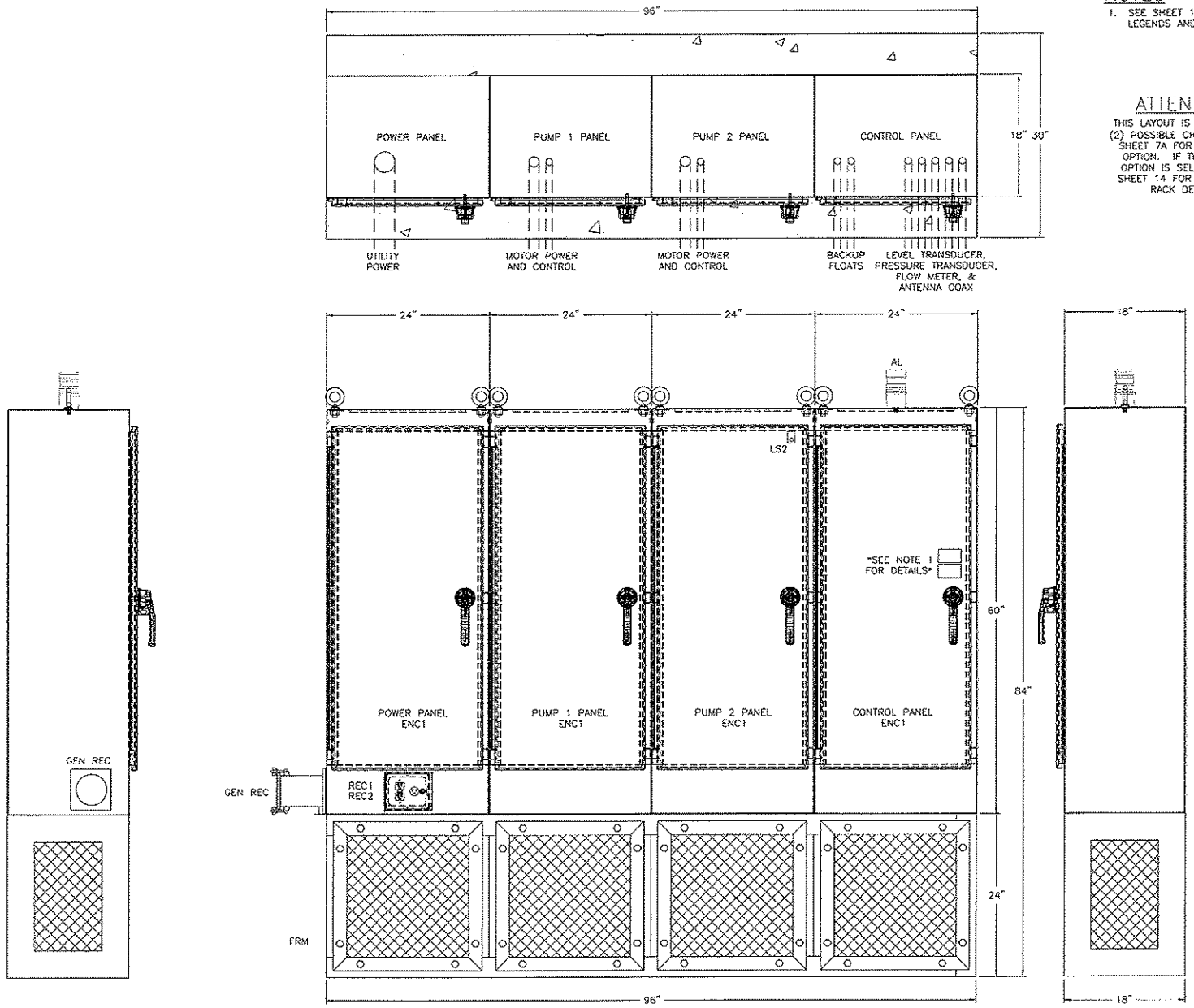

ATTENTION

THIS LAYOUT IS ONE OF TWO (2) POSSIBLE CHOICES - SEE SHEET 7A FOR THE OTHER OPTION. IF THIS LAYOUT OPTION IS SELECTED, SEE SHEET 14 FOR ASSOCIATED RACK DETAILS.

REVISIONS	BY

IMPROVEMENTS TO WASTEWATER COLLECTION SYSTEM

LIFT STATION CONSTRUCTION DETAILS

ELECTRICAL STANDARDS

FINAL SUBMITTAL

ECUA
EMERALD COAST UTILITIES AUTHORITY

APPROVED BY:

Drawn:
Designed:
Checked:
Date: MAY '13
Scale:
Project No:
Sheet No. 7
OF 18 Sheets

ALL WORK SHALL BE CONSTRUCTED IN ACCORDANCE WITH THE LATEST EDITION OF THE E.C.U.A. STANDARD SPECIFICATIONS

NOTES

1. SEE SHEET 15 FOR SCHEDULES, LEGENDS AND PANEL TAGS.
2. LAYOUT OF THE POWER & STARTER SECTIONS DEPICTS THE LARGEST POSSIBLE HORSEPOWER CONFIGURATION.

POWER ENCLOSURE LEFT SIDE PANEL LAYOUT

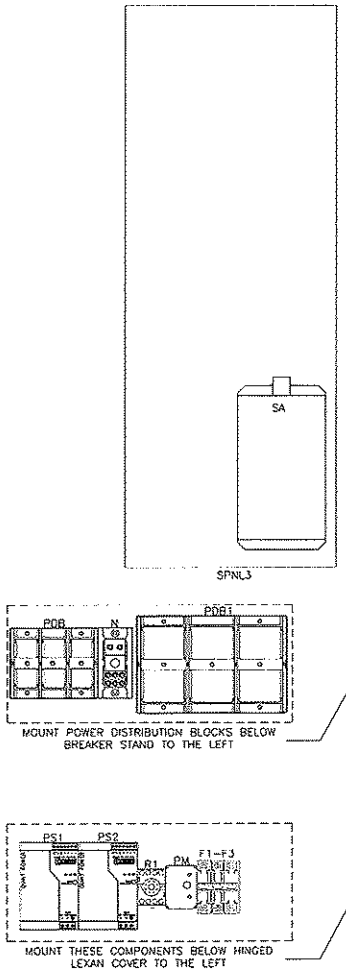

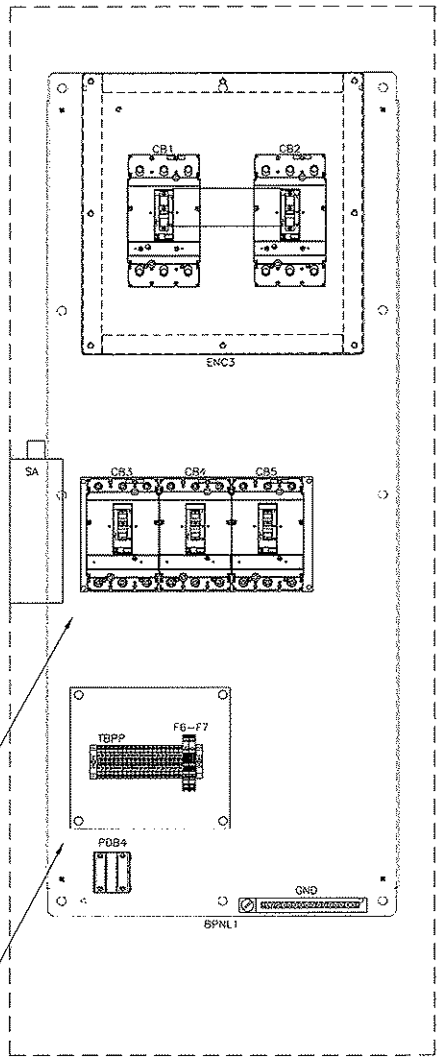

POWER ENCLOSURE BACKPANEL LAYOUT

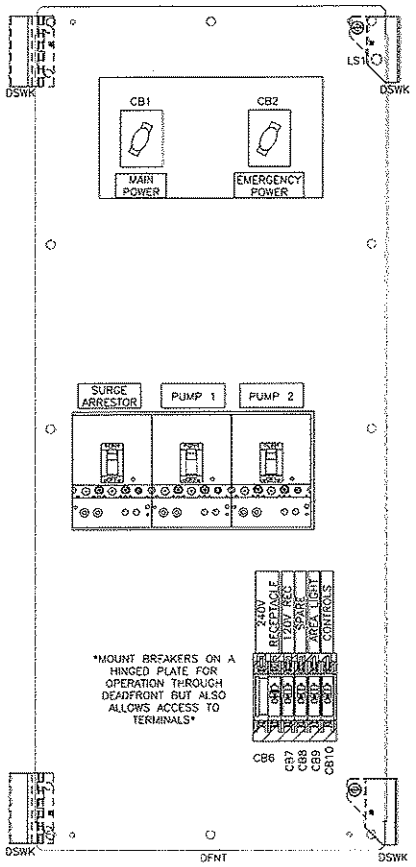

POWER ENCLOSURE DEADFRONT LAYOUT

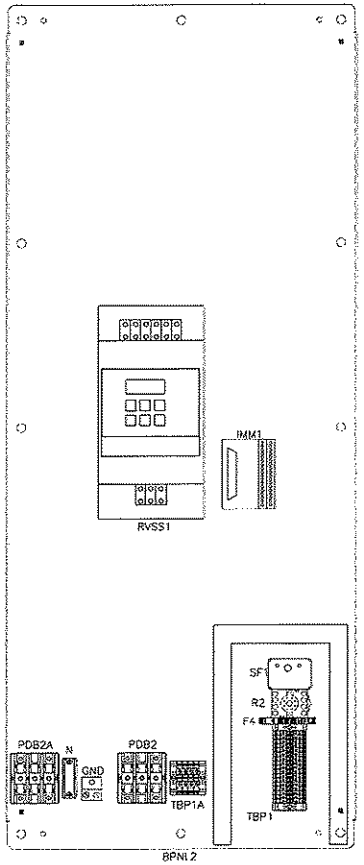

PUMP 1 ENCLOSURE BACKPANEL LAYOUT

REVISIONS	BY

IMPROVEMENTS TO WASTEWATER COLLECTION SYSTEM

LIFT STATION CONSTRUCTION DETAILS

ELECTRICAL STANDARDS

FINAL SUBMITTAL

EMERALD COAST UTILITIES AUTHORITY

APPROVED BY:

Drawn:	
Designed:	
Checked:	
Date:	MAY '13
Scale:	
Project No:	
Sheet No.	8
	OF 18 Sheets

ALL WORK SHALL BE CONSTRUCTED IN ACCORDANCE WITH THE LATEST EDITION OF THE E.C.U.A. STANDARD SPECIFICATIONS

NOTES

1. SEE SHEET 15 FOR SCHEDULES, LEGENDS AND PANEL TAGS.
2. LAYOUT OF THE VFD SECTION DEPICTS THE LARGEST POSSIBLE HORSEPOWER CONFIGURATION.

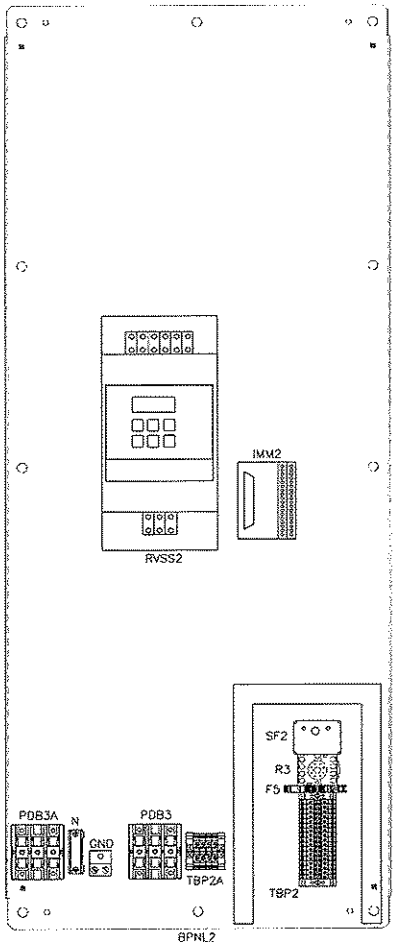

PUMP 2 ENCLOSURE BACKPANEL LAYOUT

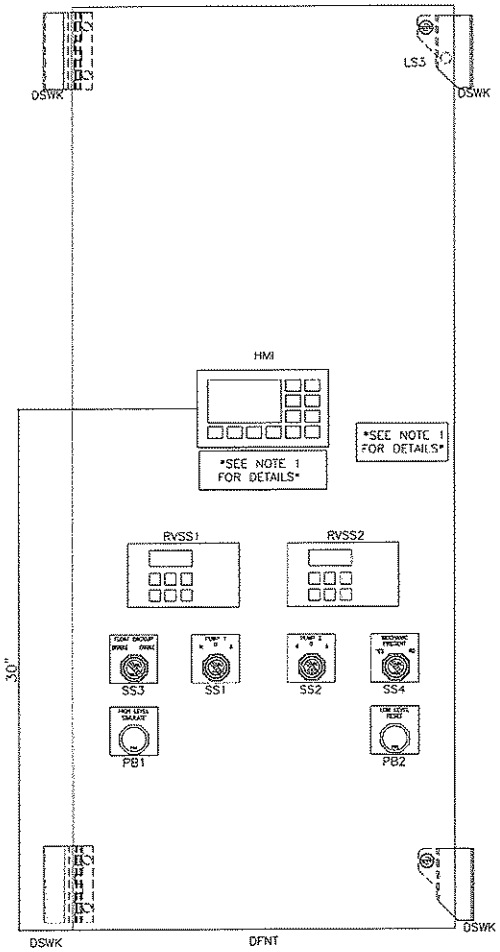

CONTROL ENCLOSURE DEADFRONT LAYOUT

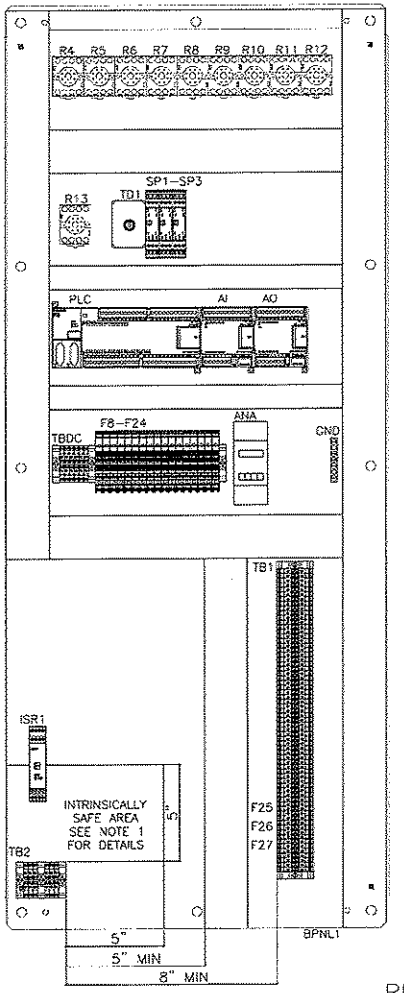

CONTROL ENCLOSURE BACKPANEL LAYOUT

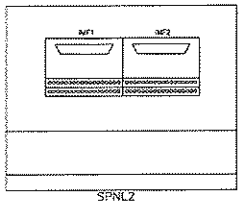

CONTROL ENCLOSURE LEFT SIDEPANEL LAYOUT

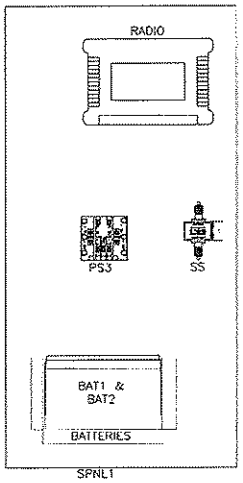

CONTROL ENCLOSURE RIGHT SIDEPANEL LAYOUT

REVISIONS	BY

IMPROVEMENTS TO WASTEWATER COLLECTION SYSTEM

LIFT STATION CONSTRUCTION DETAILS

ELECTRICAL STANDARDS

FINAL SUBMITTAL

EMERALD COAST UTILITIES AUTHORITY

APPROVED BY:

Drawn:
Designed:
Checked:
Date: MAY '13
Scale:
Project No:
Sheet No. 9
OF 18 Sheets

240-208V RVSS Equipment List

Item	Tag	Panel	Description	Manufacturer	Model	Qty
1	ENC1	All	60X24X18 NEMA 4X SS Enclosure	Hoffman	A60241SSFSN4	4
2	BPNL1	All	60x24 Painted Steel Backpanel	Hoffman	A60P24F1	4
3	SPNL1	Control	28"H x 12"W Aluminum Sidepanel	EWS	Custom	1
4	DFNT	Power & Control	60x24 Aluminum Deadfront Panel	EWS	Custom	2
5	DSWK	Power & Control	Door Swing Kit	Hoffman	ANADFK	2
6	FRM	Power	Expanded Metal Stainless Steel Frame	EWS	SEE DRAWINGS	1
7	PDB	Power	Incoming Power Distribution Block PDB	Square D	9080LBA363101	1
8	PDB	Power	Incoming Power Distribution Block PDB Cover	Square D	9080LB33	1
9	GND	Power	Power Panel Ground Bar	Square D	PK1SGTA-L	1
10	ENC3	Power	16"H x 16"W x 8"D Screw Cover Type 3R Enclosure	Hoffman	A16168SCC	1
11	CB1	Power	600V Main Circuit Breaker	Square D	SEE HP TABLE SHEET 11	1
12	CB2	Power	600V Emergency Circuit Breaker	Square D	JDL36200	1
13	CB1,CB2	Power	Mechanical Interlock for H/J Frame Circuit Breakers	Square D	S29369	1
14	CB1,CB2	Power	Door Mounted Rotary Handle for H/J Frame Circuit Breakers	Square D	S29338	2
15	GEN REC	Power	NEMA 4X Generator Receptacle	Appleton	AR20044RS	1
16	GEN REC	Power	NEMA 4X Generator Plug (Ship Loose)	Appleton	AP20044E-RS	1
17	PDB1	Power	Main Power Distribution Block PDB1	Square D	9080LBA365208	1
18	PDB1	Power	Main Power Distribution Block PDB1 Cover	Square D	9080LB53	1
19	F1-F3	Power	3 Pole Rejection type Fuse Block	Bussmann	BC6033PQ	1
20	F1-F3	Power	1A Rejection Type Fuse, Class CC	Bussmann	KTK-R-1	3
21	F1-F3	Power	Fuse Cover	Bussmann	SAMI-7H	3
22	PM	Power	240V Phase Monitor	Timemark	257B	1
23	PM	Power	600V, 8-Pin Relay Base	ABB	OTO8PC	1
24	CB3-CB5	Power	Breaker Stand	EWS	Custom	1
25	CB3	Power	30A 600V 3 Pole Circuit Breaker, Main Surge Arrestor	Square D	HDL36030	1
26	SA	Power	Main Surge Arrestor	SSI	SEE HP TABLE SHEET 11	1
27	CB4, CB5	Power	600V 3 Pole Circuit Breaker, Starter	Square D	SEE HP TABLE SHEET 11	2
28	CB4, CB5	Power	H & J Frame Circuit Breaker Locking System	Square D	S29371	2
29	PDB2A, PDB3A	Pump 1 & 2	Power Distribution Block, (1)#14-2/0.....(4)#14-4 (PDB2A, PDB3A)	Square D	9080LBA362104	2
30	PDB2A, PDB3A	Pump 1 & 2	Power Distribution Block Cover, (1)#14-2/0.....(1)#14-2/0	Square D	9080LB23	2
31	F4, F5	Pump 1 & 2	6A Fuse, RVSS Control Power	Bussmann	AGC-6	2
32	RVSS1, RVSS2	Pump 1 & 2	Reduced Voltage Soft Starter	Solcon	SEE HP TABLE SHEET 11	2
33	RVSS1, RVSS2	Control	Remote keypad for Solcon RVS-DN SoftStarter	Solcon	DISP6640043	2
34	IMM1, IMM2	Pump 1 & 2	FLKM-037 SUB/S Interface Cable Male	Phoenix Contact	2281115	2
35	IMF1, IMF2	Control	FLKM-037 SUB/B Interface Cable Female	Phoenix Contact	2281212	2
36	IMM1, IMM2, IMF1, IMF2	Pump 1, 2 & Control	37 Pin D-Sub Cable, DB-37 Male to DB-37 Female	GC Electronics	45-463	2
37	SPNL2	Control	10"H x 12"W Aluminum Sidepanel	EWS	Custom	1
38	GND	Pump 1 & 2	Motor Ground Lug	NSI	2-0T	2
39	PDB2, PDB3	Pump 1 & 2	Motor Power Distribution Block PDB2&3, (1)#14-2/0.....(1)#14-2/0	Square D	9080LBA362101	2
40	PDB2, PDB3	Pump 1 & 2	Motor Power Distribution Block PDB2&3 Cover	Square D	9080LB23	2
41	CB6-CB9	Power	Hinged Aluminum Bracked for Mounting 240/120V Circuit Breakers through Deadfront	EWS	Custom	1
42	PDB4	Power	240V/120V Power Distribution Block PDB4, (1) #14-2 .. (4) #18-10	Square D	9080LBA361104	1
43	CB5	Power	20A, 240V, 2 Pole Circuit Breaker	Square D	QOU220	1
44	REC1	Power	20A, 250V, 6-20R Receptacle	P&S	5372I	1
45	CB7, CB8	Power	20A, 120V 1 Pole Circuit Breaker	Square D	QOU120	2
46	REC2	Power	120V 20A GFCI Duplex Receptacle NEMA5-20R	P&S	2094-I	1
47	REC1, REC2	Power	Custom Receptacle Cover NEMA 4X S.S.	HOFFMAN	HIDRPSS-MOD	1
48	REC1, REC2	Power	3/4 1G AL FD BOX	Appelton	4CS-1/2	2
49	CB9	Power	15A, 120V, 1 Pole Circuit Breaker	Square D	QOU115	1
50	CB10	Power	10A, 120V, 1 Pole Circuit Breaker	Square D	QOU110	1
51	R1	Power	120V 3PDT General Purpose Relay w/ Indicator Lamp	Potter Brumfield	KRPA-14AN-120	1
52	R1-R13, SF1, SF2	All	11 Pin Relay Base	ABB	NDS-11	15
53	F4 - F7	Pump 1, 2 & Power	Fused Terminal Block w/ 120V Blown Fuse Indication	Allen Bradley	1492-H4	4
54	-	Pump 1, 2 & Power	1492-H4 &HS Fused Terminal Block End Cover	Allen Bradley	1492-N37	4
55	F6, F7	Power	3A Fuse, Power Supply Primary	Bussmann	AGC-3	2
56	PS1, PS2	Power	10A 24VDC Power Supply	Phoenix Contact	2938604	2
57	D1, D2	Power	10A Diode, P1000A	Newark	51R7094	2
58	-	Power	Custom Stand/Lexan Hinged Cover w/Alum Stand for TBPP & Power Supply Fuses	EWS	Custom	1
59	F8-F24	Control	Fused Terminal Block w/ 24VDC Blown Fuse Indication	Allen Bradley	1492-H5	17
60	F8 - F11	Control	10A Fuse, Power Supply Secondary & Batteries	Bussmann	AGC-10	4
61	BAT1, BAT2	Control	12VDC Battery	Power Sonic	PS1290	2
62	PS3	Control	24VDC-15VDC Converter, 2A	Vicor	V1-J12-EY-B1	1
63	RADIO	Control	400MHz Radio	GE MDS	SD04MD	1

240-208V RVSS Equipment List

ALL WORK SHALL BE CONSTRUCTED IN ACCORDANCE WITH THE LATEST EDITION OF THE E.C.U.A. STANDARD SPECIFICATIONS

Item	Tag	Panel	Description	Manufacturer	Model	Qty
64	RADIO	Control	DB9 Male/Male Gender Changer	Office Depot	946660	1
65	RADIO/SS	Control	3 Foot LMR400UF Coaxial Jumper NMale to TNCMale	Tessco	324503	1
66	SS	Control	Coaxial Surge Suppressor, 50-700MHz	Polyphaser	IS-50NX-C1	1
67	-	-	50FT Coaxial Cable, NMale-Nmale, Wireless Solutions 400-07-07-P50 (Ship Loose)	Tessco	370875	1
68	-	-	400MHz Yagi Antenna w/ N Female Connector, MAXRAD MYA4506N (Ship Loose)	Tessci	37634	1
69	-	-	Antenna Tower 5' Base Section, ROHN R-SB25G5 (Ship Loose)	Tessco	64559	1
70	-	-	Antenna Tower 10' Mid Section, ROHN R-25G (Ship Loose)	Tessco	56866	1
71	-	-	Antenna Tower 5' Top Section, ROHN R-25AG2 (Ship Loose)	Tessco	70080	1
72	-	-	21' 1-1/4" S.S. Antenna Mast (Ship Loose)	Bell Steel	023008	1
73	F14, F15	Control	1/4A Fuse, Motor Thermal Inputs	Bussmann	AGC-1/4	2
74	F12, F13, F19, F20	Control	2A Fuse, Radio Power Supply, Radio & Digital Outputs	Bussmann	AGC-2	4
75	SS1, SS2	Control	3 Position Selector Switch, 30MM	Square D	9001SK543BH2	2
76	R2-R13	Control	24VDC 3PDT General Purpose Relay w/ Indicator Lamp	Potter Brumfield	KRPA-14DN-24	12
77	SF1, SF2	Control	120V Seal Failure Relay	ATC	SPM-120-AAA-10K	2
78	ISR1	Control	Intrinsically Safe Barrier Relay, 24VDC	Pepperl & Fuchs	KFD2-SR2-Ex2.W	1
79	TB2	Control	Terminal Block, Blue TB2	Phoenix Contact	3044115	4
80	TB2	Control	Terminal Block, Blue End Barrier, TB2	Phoenix Contact	3047235	1
81	TB2	Control	Ground Terminal Blocks, TB2	Phoenix Contact	3044128	2
82	PB1, PB2	Control	Push Button, Black 1NO 1NC	Square D	9001SKR1BH13	2
83	SS3, SS4	Control	2 Position Selector Switch, 30MM	Square D	9001SKS11BH2	2
84	TD1	Control	24VDC 0-180 Second Time Delay Relay	Square D	RE48ATM12MW	1
85	TD1	Control	8 Pin Relay Base	ABB	NDS-8	1
86	AL	Control	24VDC Red Alarm Light	Federal Signal	LP3M-012-048R	1
87	F16, F23, F24	Control	1/10A Fuse, Analog Inputs, Analog Outputs & HMI	Bussmann	AGC-1/10	3
88	HMI	Control	TD400C Text Display	Siemens	6AV6 640-0AA00-0AX1	1
89	F17, F18	Control	1A Fuse, Digital Inputs	Bussmann	AGC-1	2
90	PLC	Control	S7-200 Dual Com Port Processor w/ 24 DI & 16 DO Points	Siemens	6ES7 216-2AD23-0XB0	1
91	AI	Control	S7-200 4 Point AI Module	Siemens	6ES7 231-0HC22-0XA0	1
92	AO	Control	S7-200 2 Point AO Module	Siemens	6ES7 232-0HB22-0XA0	1
93	PLC	Control	S7-200 Communication cable PC/PPI RS-232/485	Siemens	6ES7 901-3CB30-0XA0	1
94	SP1-SP3	Control	Plug In DI Surge Suppression, PT 4x1...DC	Phoenix Contact	2838922	3
95	SP1-SP3	Control	Terminal Block Base for Plugable Surge Supression, PT 4x1-BE	Phoenix Contact	2839363	3
96	LS1-LS4	Control	Panel Intrusion Switches, N.C. Contacts	NSI	7603GPS	4
97	F21	Control	1-1/2A Fuse, PLC Supply	Bussmann	AGC-1-1/2	1
98	F22	Control	3/4A Fuse, Process Analyzer	Bussmann	AGC-3/4	1
99	PT	Control	Level Transmitter	Endress & Hauser	RMA42AAAH2	2
100	PT	-	Submersible Level Transducer, 20ft Range w/ 60ft Cable & Mounting Clamp (Ship Loose)	Endress & Hauser	FMX21-FE221GGE21APO	1
101	F29-F31	Control	24VDC Fused Terminal Block With Indication	Phoenix Contact	3046090	3
102	F29-F31	Control	1/4A Fuse, Analog Inputs	Bussmann	GMA-250	3
103	F4, F5	Pump 1 & 2	6A Fuse, RVSS Control Power	BUssmann	AGC-6	2
104	TBPP,1,DC,P1,1A,P2 & 2A	All	Terminal Block, Gray 26-10 AWG Wire	Phoenix Contact	3044102	120
105	TBPP,1,DC,P1,1A,P2 & 2A	All	Terminal Block End Barrier	Phoenix Contact	3047028	8
106	TBPP,1,DC,P1,1A,P2 & 2A	All	Terminal Block End Anchor	Phoenix Contact	0800886	17
107	TBP1A, TBP2A	Pump 1 & 2	Terminal Block, Gray 26-8 AWG Wire, TBVFD1A & TBVFD2A	Phoenix Contact	3044131	8
108	GND	Control	Control Panel Ground Bar	Square D	PK5GTA	3
109	-	Pump 1, 2 & Control	Meter Socket (SHIP LOOSE)	Milbank	UAP3566-X-H5P	1
110	-	-	Stainless Steel 60' Float (SHIP LOOSE)	Anchor Scientific	P60NO-SST	2
111	-	-	Insulated Ground Neutral (SHIP LOOSE)	Square D	SN400LA	1
112	-	-	Ground Bar Kit (SHIP LOOSE)	Square D	PKDGTI250	1
113	-	-	NEMA 4A S.S. Disconnect (SHIP LOOSE)	Square D	J250DS	1
114	-	-	Antenna Mast Stabilization Plate (Ship Loose)	EWS	Custom	1
115	-	-	Stainless Steel 'U' Bolt, 2" Pole, 5/16" Diameter Bolt w/ 2-1/2" Threads (SHIP LOOSE)			1
116	-	-	5/16" Stainless Steel Flat Washer for 'U' Bolt (SHIP LOOSE)			2
117	-	-	5/16" Stainless Steel Lock Washer for 'U' Bolt (SHIP LOOSE)			2
118	-	-	5/16" Stainless Steel Nut for 'U' Bolt (SHIP LOOSE)			2
119	-	-	Stainless Steel 'U' Bolt, 1/4" Diameter (SHIP LOOSE)			2
120	-	-	1/4" Stainless Steel 1/4" Nut for 'U' Bolt (SHIP LOOSE)			4
121	-	-	1-1/4" Reduction Bushing for Antenna Tower, ROHN R-TB50 (SHIP LOOSE)	Tessco	36882	1
122	PLC	Control	S7-200 Memory Module	Siemens	6ES7 291BGF230AX0	1
123	N	Power	Incoming Neutral Block	Square D	9080LBA163206	1
124	N	Power	Incoming Neutral Block Cover	Square D	9080LB31	1
125	N	Pump 1 & 2	Neutral Block	Square D	9080LBA161104	2
126	SPNL3	Power	32"X12" Aluminum Sidepanel	EWS	Custom	1
127	FM	Control	Flow Meter	Endress & Hauser	50P Compact	1
128	PR	Control	Pressure Transmitter	Endress & Hauser	PMP71-AAC1PG1RAA	1

REVISIONS	BY

IMPROVEMENTS TO WASTEWATER COLLECTION SYSTEM

LIFT STATION CONSTRUCTION DETAILS

ELECTRICAL STANDARDS

FINAL SUBMITTAL

EMERALD COAST UTILITIES AUTHORITY

APPROVED BY

Drawn:
Designed:
Checked:
Date: MAY '13
Scale:
Project No:
Sheet No. 10
Of 18 Sheets

ALL WORK SHALL BE CONSTRUCTED IN ACCORDANCE WITH THE LATEST EDITION OF THE E.C.U.A. STANDARD SPECIFICATIONS

Horsepower Related Components Equipment List					
Item	Tag	240V Supply		208V Supply	
		Horsepower		Horsepower	
		10	15	10	15
Main Circuit Breaker	CB1	JDL36200	JDL36225	JDL36225	JDL36250
Starter Circuit Breaker	CB4, CB5	HDL36090	HDL36100	HDL36100	HDL36110
Reduced Voltage Soft Starter	M1, M2	RVS-DN-58-400-115-3+M+8+9+D+U-S	RVS-DN-72-400-115-3+M+8+9+D+U-S	RVS-DN-72-400-115-3+M+8+9+D+U-S	RVS-DN-85-400-115-3+M+8+9+D+U-S
Surge Arrestor	SA	SDLA3D1	SDLA3D1	SDLA3Y1	SDLA3Y1

Horsepower Related Power Conductors, CGB's and Hubs					
Conductor Tag		Horsepower (240V)		Horsepower (208V)	
		20	25	20	25
P-01, P-03 & P-04	Description	(3)#3/0	(3)#4/0	(3)#4/0	(3)#250
	Manufacturer	N/A	N/A	N/A	N/A
	Catalog #	N/A	N/A	N/A	N/A
	Length (Ft. Max)	N/A	N/A	N/A	N/A
	Cable Dia (in)	0.584"	0.642"	0.642"	0.711"
	Appleton Connector	(3) -CG-5075	(3) -CG-6275	(3) -CG-6275	(3) -CG-75100
	Connector Range	0.500"-0.625"	0.625"-0.750"	0.625"-0.750"	0.750"-0.875"
	Meyers Hub	(3) 3/4" - STA-2	(3) 3/4" - STA-2	(3) 3/4" - STA-2	(3) 1" - STA-3
P-02A	Description	(1)#6	(1)#4	(1)#4	(1)#4
	Manufacturer	N/A	N/A	N/A	N/A
	Catalog #	N/A	N/A	N/A	N/A
	Length (Ft. Max)	N/A	N/A	N/A	N/A
	Cable Dia (in)	0.254"	0.324"	0.324"	0.324"
	Appleton Connector	(1)-GC-1850	(1)-GC-3150	(1)-GC-3150	(1)-GC-3150
	Connector Range	0.187"-0.312"	0.312"-0.437"	0.312"-0.437"	0.312"-0.437"
	Hub	(1) 1/2" - STA-1	(1) 1/2" - STA-1	(1) 1/2" - STA-1	(1) 1/2" - STA-1
P-02B	Description	(1)#6	(1)#4	(1)#4	(1)#4
	Manufacturer	Southwire	Southwire	Southwire	Southwire
P-05 & P-06	Description	(3)#3/0	(3)#3/0	(3)#3/0	(3)#3/0
	Manufacturer	N/A	N/A	N/A	N/A
	Catalog #	N/A	N/A	N/A	N/A
	Length (Ft. Max)	N/A	N/A	N/A	N/A
	Cable Dia (in)	0.584"	0.584"	0.584"	0.584"
	Appleton Connector	(3) -CG-5075	(3) -CG-5075	(3) -CG-5075	(3) -CG-5075
	Connector Range	0.500"-0.625"	0.500"-0.625"	0.500"-0.625"	0.500"-0.625"
	Hub	(3) 3/4" - STA-2	(3) 3/4" - STA-2	(3) 3/4" - STA-2	(3) 3/4" - STA-2
P-07 & P-09	Description	(3)#4 W/G, TC	(3)#4 W/G, TC	(3)#4 W/G, TC	(3)#2 W/G, TC
	Manufacturer	Houston Wire	Houston Wire	Houston Wire	Houston Wire
	Catalog #	HW 154 00404	HW 154 00404	HW 154 00404	HW 154 00204
	Length (Ft. Max)	19 FT	19 FT	19 FT	19 FT
	Cable Dia (in)	0.97"	0.97"	0.97"	1.13"
	Appleton Connector	(2) - CG-87100	(2) - CG-87100	(2) - CG-87100	(2) - CG-112125
	Connector Range	0.875"-1.000"	0.875"-1.000"	0.875"-1.000"	1.125"-1.250"
	Hub	(2) 1" - STA-3	(2) 1" - STA-3	(2) 1" - STA-3	(2) 1-1/4" - STA-4
P-08 & P-10	Description	(3)#4	(3)#4	(3)#4	(3)#2
	Manufacturer	Southwire	Southwire	Southwire	Southwire

REVISIONS	BY

IMPROVEMENTS TO WASTEWATER COLLECTION SYSTEM

LIFT STATION CONSTRUCTION DETAILS

ELECTRICAL STANDARDS

FINAL SUBMITTAL

ECUA

EMERALD COAST UTILITIES AUTHORITY

APPROVED BY:

Drawn:
Designed:
Checked:
Date: MAY '13
Scale:
Project No:
Sheet No. 11
Of 18 Sheets

ALL WORK SHALL BE CONSTRUCTED IN ACCORDANCE WITH THE LATEST EDITION OF THE E.C.U.A. STANDARD SPECIFICATIONS

Power & Control Conductors, CGB's and Hubs

Cable Number	Description	Manufacturer	Catalog Numer	Length (Ft. Max)	Cable Diameter	Appleton Liquidtight Cable Connector	Connector Cable Range	Crouse-Hinds Myers Hub	From Panel/Enclosure	To Panel/Enclosure
P-14	(1) #8 AWG	N/A	N/A	AS REQ'D	N/A	N/A	N/A	N/A	Field	Power Panel
P-15	3-1/C #12 AWG	N/A	N/A	AS REQ'D	N/A	N/A	N/A	N/A	Power Panel	Power Panel
P-16	3-1/C #12 AWG	N/A	N/A	AS REQ'D	N/A	N/A	N/A	N/A	Power Panel	Power Panel
C-01	(16) #14 AWG, Tray Cable	Houston Wire & Cable	HW 151 01416	24 FT	0.68"	(2) - CG-6275	0.625"-0.750"	(2) 3/4" - STA-2	Power Panel	Control Panel
C-02	(16) #14 AWG, Tray Cable	Houston Wire & Cable	HW 151 01416	22 FT	0.68"	(2) - CG-6275	0.625"-0.750"	(2) 3/4" - STA-2	Pump 1 Panel	Control Panel
C-03	(16) #14 AWG, Tray Cable	Houston Wire & Cable	HW 151 01416	19 FT	0.68"	(2) - CG-6275	0.625"-0.750"	(2) 3/4" - STA-2	Pump 2 Panel	Control Panel
C-04	1 Pair #16 SH, Tray Cable	Houston Wire & Cable	HW 120 01601	22 FT	0.33"	(2) - CG-2575	0.250"-0.375"	(2) 3/4" - STA-2	Pump 1 Panel	Control Panel
C-05	1 Pair #16 SH, Tray Cable	Houston Wire & Cable	HW 120 01601	22 FT	0.33"	(2) - CG-2575	0.250"-0.375"	(2) 3/4" - STA-2	Pump 2 Panel	Control Panel
PUMP 1-PWR	Per Mfg Specs	N/A	N/A	N/A	N/A	CG Series based on Mfg Specs	N/A	STA Series based on Mfg Specs	Field	Pump 1 Panel
PUMP 1-MTP	Per Mfg Specs	N/A	N/A	N/A	N/A	CG Series based on Mfg Specs	N/A	STA Series based on Mfg Specs	Field	Pump 1 Panel
PUMP 1-SF	Per Mfg Specs	N/A	N/A	N/A	N/A	CG Series based on Mfg Specs	N/A	STA Series based on Mfg Specs	Field	Pump 1 Panel
PUMP 2-PWR	Per Mfg Specs	N/A	N/A	N/A	N/A	CG Series based on Mfg Specs	N/A	STA Series based on Mfg Specs	Field	Pump 2 Panel
PUMP 2-MTP	Per Mfg Specs	N/A	N/A	N/A	N/A	CG Series based on Mfg Specs	N/A	STA Series based on Mfg Specs	Field	Pump 2 Panel
PUMP 2-SF	Per Mfg Specs	N/A	N/A	N/A	N/A	CG Series based on Mfg Specs	N/A	STA Series based on Mfg Specs	Field	Pump 2 Panel
Float Switch 1	Float Switch Cable	BY OTHERS	N/A	N/A	0.56"	(1) - CG-5050	0.500"-0.625"	(1) 1/2" - STA-1	Field	Control Panel
Float Switch 2	Float Switch Cable	BY OTHERS	N/A	N/A	0.56"	(1) - CG-5050	0.500"-0.625"	(1) 1/2" - STA-1	Field	Control Panel
Pressure Xducer	Pressure Transducer Cable	BY OTHERS	N/A	N/A	0.35"	(1) - G-3150	0.312"-0.437"	(1) 1/2" - STA-1	Field	Control Panel
Antenna COAX	Coaxial Cable	BY OTHERS	N/A	N/A	0.408"	(1) - CG-3750	0.375"-0.500"	(1) 1/2" - STA-1	Field	Control Panel
Comm-1	(37) #18 AWG, Tray Cable	Houston Wire & Cable	HW15001837	20 FT	0.74"	(1) - CG-6275	0.625"-0.750"	(1) 3/4" - STA-2	Control Panel	Pump 1 Panel
Comm-2	(37) #18	Houston Wire & Cable	HW15001837	20 FT	0.74"	(1) - CG-6275	0.625"-0.750"	(1) 3/4" - STA-2	Control Panel	Pump 2 Panel

REVISIONS	BY

IMPROVEMENTS TO WASTEWATER COLLECTION SYSTEM

LIFT STATION CONSTRUCTION DETAILS

ELECTRICAL STANDARDS

FINAL SUBMITTAL

EMERALD COAST UTILITIES AUTHORITY

APPROVED BY:

Drawn:
Designed:
Checked:
Date: MAY '13
Scale:
Project No:
Sheet No. 12
OF 18 Sheets

NOTES:

ALL WORK SHALL BE CONSTRUCTED IN ACCORDANCE WITH THE LATEST EDITION OF THE E.C.U.A. STANDARD SPECIFICATIONS

1) ALL SPARE WIRE WILL BE CLEARLY LABELED WITH THE CABLE NUMBER & A SPARE DESIGNATION ON INDIVIDUAL WIRES. THESE SPARES WILL BE LONG ENOUGH TO REACH ANY POINT IN THE PANEL.
2) SPARE CONDUCTORS SHOULD BE TRIMMED AND HEAT SHRINK SHOULD BE USED TO SECURE THE SPARE CONDUCTORS IN THE CABLE.
3) THE INNER CONNECTING CONDUCTORS BETWEEN THE PANELS ARE CODED AS FOLLOWS: THE FIRST GROUP OF CHARACTER IS THE WIRE NUMBER AND THE SECOND GROUP IS THE COLOR (I.E. 1(BK) SIGNIFIES THAT THE WIRE NUMBER IS 1 AND THE COLOR IS BLACK). WIRE COLOR CODE AS FOLLOWS: BK-BLACK, RD-RED, BU-BLUE, OR-ORANGE, YL-YELLOW, BN-BROWN. FOR COLORS THAT ARE DENOTED AS XX/YY, XX IS THE BASE COLOR AND YY IS THE SPIRAL STRIPE (I.E. RD/BK IS A RED WIRE WITH A BLACK SPIRAL STRIPE).
4) SEE SHEETS 11 & 12 FOR PANEL TO PANEL INNER CONNECTING CONDUCTOR AND CABLE DETAILS.

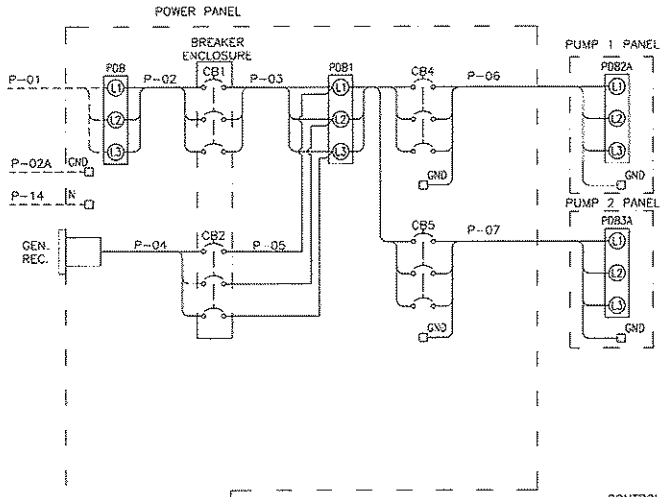

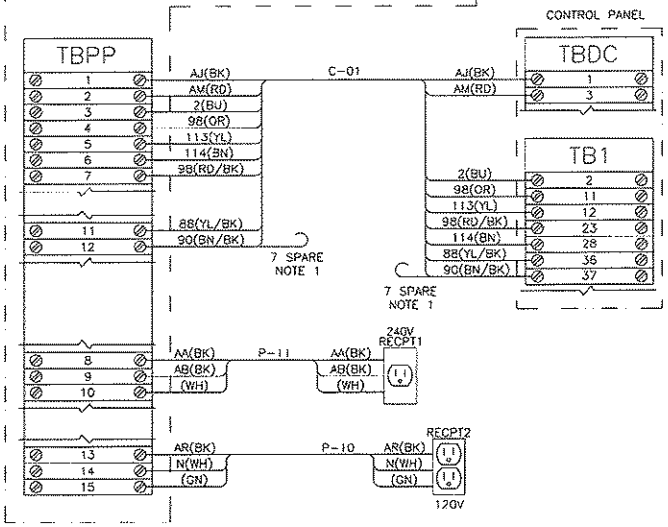

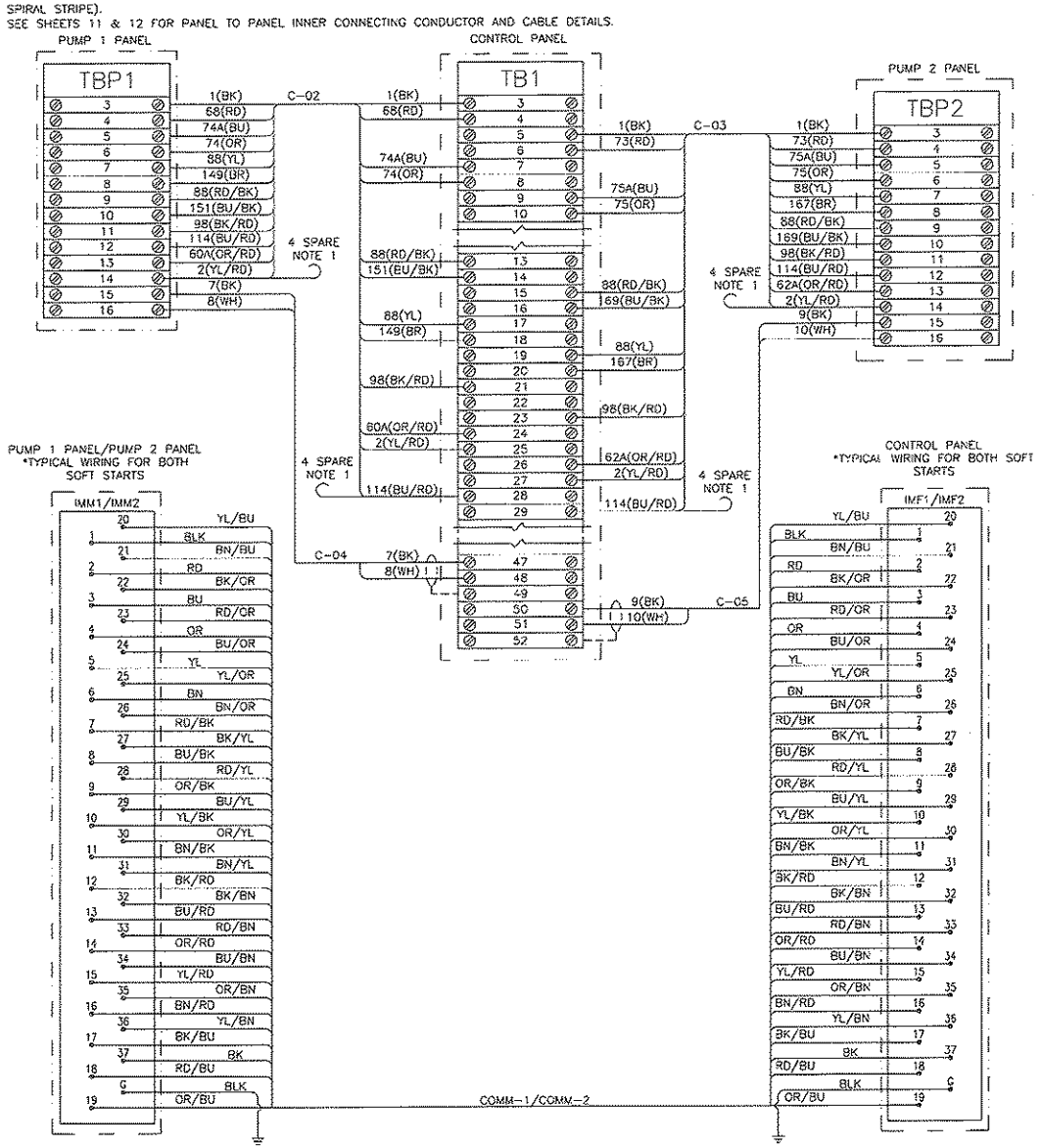

REVISIONS	BY

IMPROVEMENTS TO WASTEWATER COLLECTION SYSTEM

LIFT STATION CONSTRUCTION DETAILS

ELECTRICAL STANDARDS

FINAL SUBMITTAL

EMERALD COAST UTILITIES AUTHORITY

APPROVED BY:

Drawn:	
Designed:	
Checked:	
Date:	MAY '13
Scale:	
Project No:	
Sheet No.	13
	OF 18 Sheets

ALL WORK SHALL BE CONSTRUCTED IN ACCORDANCE WITH THE LATEST EDITION OF THE E.C.U.A. STANDARD SPECIFICATIONS

NOTES:

1. TOP AND BOTTOM OF BASE TO BE LEFT OPEN.
2. DRILL TOP OF BASE TO ATTACH ENCLOSURES AS REQUIRED.
3. DRILL BOTTOM OF BASE TO ATTACH TO SLAB AS REQUIRED.

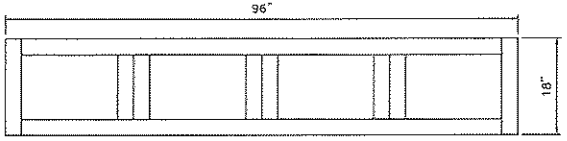

TOP VIEW

ATTENTION

THIS LAYOUT IS ONE OF TWO (2) POSSIBLE CHOICES - SEE SHEET 14A FOR THE OTHER OPTION. IF THIS LAYOUT OPTION IS SELECTED, SEE SHEET 7 FOR ASSOCIATED PANEL LAYOUT DETAILS.

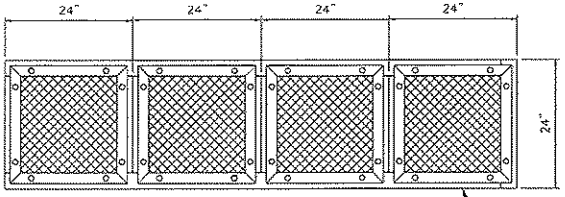

FRONT VIEW

FRONT OF BASE WILL HAVE REMOVABLE PANELS AT EACH OPENING AS SHOWN. ATTACH SCREENS TO BACK SIDE OF REMOVABLE PANELS

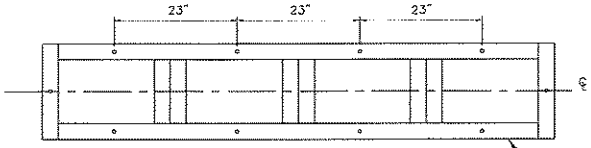

BOTTOM VIEW

DRILL (10) 5/8"Φ HOLES AS SHOWN, CENTERED ON ANGLE

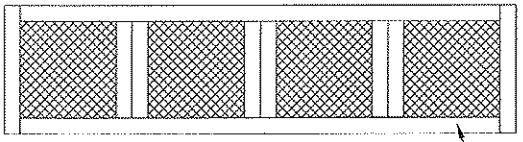

BACK VIEW

ENTIRE BASE MADE FROM 2" STAINLESS STEEL ANGLE, WELDED

REVISIONS	BY

IMPROVEMENTS TO WASTEWATER COLLECTION SYSTEM

LIFT STATION CONSTRUCTION DETAILS

ELECTRICAL STANDARDS

FINAL SUBMITTAL

EMERALD COAST UTILITIES AUTHORITY

APPROVED BY:

Drawn:	
Designed:	
Checked:	
Date:	MAY '13
Scale:	
Project No:	
Sheet No.	14
	OF 18 Sheets

ALL WORK SHALL BE CONSTRUCTED IN ACCORDANCE WITH THE LATEST EDITION OF THE E.C.U.A. STANDARD SPECIFICATIONS

Power Panel Fuse Schedule				
Fuse	Type	Voltage	Amps	Description
F1	KTK-R-1	600	1A	Phase Monitor A Phase
F2	KTK-R-1	600	1A	Phase Monitor B Phase
F3	KTK-R-1	600	1A	Phase Monitor C Phase
F10	AGC-3	250	3A	Power Supply 1 Primary
F11	AGC-3	250	3A	Power Supply 2 Primary

Pump 1 Panel Fuse Schedule				
Fuse	Type	Voltage	Amps	Description
F4	FNQ-R-3-1/2	600	3-1/2A	Pump 1 CPT Phase A
F5	FNQ-R-3-1/2	600	3-1/2A	Pump 1 CPT Phase C
F6	FNQ-10	500	10A	Pump 1 CPT Secondary
F32	AGC-6	250	6A	RVSS Control Power

Pump 2 Panel Fuse Schedule				
Fuse	Type	Voltage	Amps	Description
F7	FNQ-R-3-1/2	600	3-1/2A	Pump 2 CPT Phase A
F8	FNQ-R-3-1/2	600	3-1/2A	Pump 2 CPT Phase C
F9	FNQ-10	500	10A	Pump 2 CPT Secondary
F33	AGC-6	250	6A	RVSS Control Power

Control Panel Fuse Schedule				
Fuse	Type	Voltage	Amps	Description
F12	AGC-10	250	10A	Power Supply 1 Secondary
F13	AGC-10	250	10A	Power Supply 2 Secondary
F14	AGC-10	250	10A	Control Power
F15	AGC-10	250	10A	Batteries
F16	AGC-2	250	2A	Radio Power Supply Primary
F17	AGC-2	250	2A	Radio Power Supply Secondary
F18	AGC-1/4	250	1/4A	Pump 1 Motor Thermal
F19	AGC-1/4	250	1/4A	Pump 2 Motor Thermal
F20	AGC-1/10	250	1/10A	Operator Interface
F21	AGC-1	250	1A	Digital Inputs 0.0-1.4
F22	AGC-1	250	1A	Digital Inputs 1.5-2.7
F23	AGC-2	250	2A	Digital Outputs 0.0-0.7
F24	AGC-2	250	2A	Digital Outputs 1.0-1.7
F25	AGC-1-1/2	250	1-1/2A	PLC Power
F26	AGC-3/4	250	3/4A	Process Transmitter Supply
F27	AGC-1/10	250	1/10A	Analog Inputs
F28	AGC-1/10	250	1/10A	Analog Outputs
F29	GMA-1/4	250	1/4A	Analog Input 2
F30	GMA-1/4	250	1/4A	Analog Input 3
F31	GMA-1/4	250	1/4A	Analog Input 4

HMI BUTTON LEGEND	
F1	FAULT RESET/ENABLE INTRUSION
SHIFT+F1	DISABLE INTRUSION
F2	ALTERNATE PUMP ASSIGNMENTS
F3	RESET PUMP 1 RUNTIME
SHIFT+F3	RESET PUMP 2 RUNTIME
F4	ALARMS SCREEN
F5	OVERVIEW SCREEN
F6	PUMP 1 SCREEN
F7	PUMP 2 SCREEN
F8	SETPOINTS SCREEN

CONTROL PANEL INSIDE INFORMATION TAG

THIS AREA IN REAR IS FOR IN-CONTROL SAFE CIRCUITS AND DEVICES ONLY. THIS AREA INCLUDES THE ENTIRE SPACE BEHIND IN THE BLUE AREA BETWEEN THE BACKPANEL AND THE ENCLOSURE WALLS AND DOOR INCLUDING THE BOTTOM OF THE ENCLOSURE. ONLY INTRINSICALLY SAFE DEVICES AND WIRING ARE ALLOWED IN THIS AREA. DO NOT ROUTE NON-INTRINSICALLY SAFE WIRE THROUGH THE AREA OF ENCLOSURE.

WARNING

SUBSTITUTION OF COMPONENTS MAY IMPAIR INTRINSIC SAFETY

CONTROL PANEL EXTERIOR TAG INFORMATION

WARNING

TO PREVENT IGNITION OF FLAMMABLE OR COMBUSTIBLE ATMOSPHERE DISCONNECT POWER BEFORE OPENING

PROVIDES INTRINSICALLY SAFE CIRCUITS FOR USE IN CLASS I, GROUPS A, B, C, AND D WHEN CONNECTED PER INSTALLATION DRAWINGS ON NON-HAZARDOUS LOCATION

CONTROL PANEL DEAD-FRONT TAG INFORMATION

SECURELY FASTEN ALL INNER DOOR LATCHES BEFORE CLOSING OUTER DOOR. FAILURE TO DO SO MAY REFLECTIONS COULD CAUSE THE OUTER DOOR TO JAM IN A PROTRUDED

Nameplate Data					
Total Load (FLA)	73	99	127	155	181
Motor Hp	20	30	40	50	60
Motor FLA	27	40	52	65	77

Torque Rating Table					
	Horsepower				
Component	20	30	40	50	60
Incoming Distribution Block (PDB1)	120lb-in/13.5N-m	275lb-in/31.0N-m	275lb-in/31.0N-m	275lb-in/31.0N-m	275lb-in/31.0N-m
Main Ground Block	35lb-in/3.9N-m	35lb-in/3.9N-m	35lb-in/3.9N-m	35lb-in/3.9N-m	35lb-in/3.9N-m
Motor Distribution Block (PDB2 & 3)	40lb-in/4.5N-m	120lb-in/13.5N-m	120lb-in/13.5N-m	120lb-in/13.5N-m	120lb-in/13.5N-m
Motor Ground Block	35lb-in/4.0N-m	45lb-in/5.1N-m	45lb-in/5.1N-m	45lb-in/5.1N-m	45lb-in/5.1N-m

REVISIONS	BY

IMPROVEMENTS TO WASTEWATER COLLECTION SYSTEM

LIFT STATION CONSTRUCTION DETAILS

ELECTRICAL STANDARDS

FINAL SUBMITTAL

EMERALD COAST UTILITIES AUTHORITY

APPROVED BY:

Drawn:
Designed:
Checked:
Date: MAY '13
Scale:
Project No:
Sheet No. 15
Of 18 Sheets

ALL WORK SHALL BE CONSTRUCTED IN ACCORDANCE WITH THE LATEST EDITION OF THE E.C.U.A. STANDARD SPECIFICATIONS

HAZARDOUS (CLASSIFIED) LOCATION	NON-HAZARDOUS LOCATION
CLASS I, ZONE 0 OR 1, GROUPS IIC, IIB, IIA or CLASS I, DIVISION 1, GROUPS A,B,C,D CLASS II, DIVISION 1, GROUPS E,F,G CLASS III, DIVISION 1	CLASS I, ZONE 2, GROUPS IIC, IIB, IIA or CLASS I, DIVISION 2, GROUPS A,B,C,D

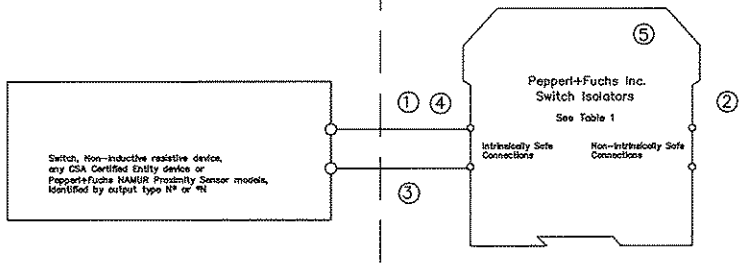

Notes:

① The intrinsically safe wiring must be installed in accordance with the Canadian Electrical Code CSA C22.1, Part 1, Appendix F.

② Barriers listed in Table 1 shall not be connected to any device that uses or generates in excess of 250Vrms or DC unless it has been determined that the voltage is adequately isolated from the barrier. Barriers listed in Table 2 shall not be connected to any device that uses or generates in excess of 60Vrms or DC unless the voltage is limited by an adequate means.

③ Any combination of up to 10 channels of the barriers listed in Table 1 or Table 2 may be connected in parallel and connected to a switch in a hazardous location.

④ The Entity concept allows interconnection of intrinsically safe apparatus with associated apparatus not specifically examined in combination as a system when the approved values of Voc and Isc for the associated apparatus are less than or equal to Vmax and Imax for the intrinsically safe apparatus and the approved values of Ca and La for the associated apparatus are greater than Ci + Ccable and Li + Lcable, respectively, for the intrinsically safe apparatus.

⑤ The following models with part number greater than 100000 are approved for mounting in a Class I, Zone 2, Groups IIC,IIB,IIA or Class I, Division 2, Groups A,B,C,D hazardous (classified) location: KF**-SR2-EX1.W, KF**-SR2-EX1.W.LB, KF**-SR2-EX2.W, KFD2-SR2-EX2.2S, KFD2-ST2-EX1.*, KFD2-ST2-EX2.*, KFD2-SOT2-EX1.*, KFD2-SOT2-EX2.*.

WARNING: Substitution of components may impair intrinsic safety and/or suitability for use in Class I, Division 2, Groups A,B,C,D or Class I, Zone 2, Groups IIC,IIB,IIA.
ADVERTISSEMENT: La substitution de composants peut compromettre la sécurité intrinsèque.

No changes without prior permission CSA

THIS DRAWING CONTAINS PROPRIETARY DATA. NO DISCLOSURE, REPRODUCTION, OR USE OF ANY PART MAY BE MADE EXCEPT BY WRITTEN PERMISSION.

Title Installation Drawing for CSA Certified Switch Isolators

Revisions				ECO No.	Pepperl+Fuchs® Inc. Twinsburg, OH 44087-2202	Repl.No.	Draw. No. 116-0047j	Sh. 1 of 2
2-20-2008						-		
In.	Date	Cons.	Resp.	Appr.				

TABLE 1: Barriers Certified to CSA Standard C22.2 No. 157 (Um = 250 V)

Model Numbers	Terminals	SYSTEM		ENTITY							
		V_{max}(V)	Res. (Ω)	V_{oc} (V)	I_{sc}(mA)	C_a(uF) GRPS			L_a(mH) GRPS		
						A,B	C,E	D,F,G	A,B	C,E	D,F,G
KFD2-SOT-Ex1*,KFD2-SOT-Ex2* KFD2-SR-Ex1*,KFD2-SR-Ex2* KFD2-SRT-Ex1* KFD2-ST-Ex1*,KFD2-ST-Ex2* KFA5-SR2-Ex1*,KFA5_SR2-Ex2* KFA6-SR2-Ex1*,KFA6-SR2-Ex2* KFD2-SR2-Ex1*,KFD2-SR2-Ex2*	1-3, 2-3; 4-6, 5-6	12.6	650	12.9	19.8	1.273	3.820	10.19	84.88	298.7	744.4
KFA5-SOT2-Ex1*,KFA5-SOT2-Ex2* KFA6-SOT2-Ex1*,KFA6-SOT2-Ex2*	1-3, 2-3; 4-6, 5-6	10.5	811	10.5	13.0	2.66	7.9	21.3	192	671	1000

TABLE 2: Barriers Certified to CSA Standard E79-11 (Um = 60 V)

Model Numbers	Terminals	Load Parameters							
		U_o (V_{oc})	I_o (I_{sc})	C_a(uF) GRPS			L_a(mH) GRPS		
				IIC (A,B)	IIB (C,E)	IIA (D,F,G)	IIC (A,B)	IIB (C,E)	IIA (D,F,G)
KFD2-SOT2-Ex1*,KFD2-SOT2-Ex2* KFD2-ST2-Ex1*,KFD2-ST2-Ex2*	1-3, 2-3; 4-6, 5-6	10.5	13.0	2.66	7.9	21.3	192	671	1000

No changes without prior permission CSA

THIS DRAWING CONTAINS PROPRIETARY DATA. NO DISCLOSURE, REPRODUCTION, OR USE OF ANY PART MAY BE MADE EXCEPT BY WRITTEN PERMISSION.

Title Installation Drawing for CSA Certified Switch Isolators

Revisions				ECO No.	Pepperl+Fuchs® Inc. Twinsburg, OH 44087-2202	Repl.No.	Draw. No. 116-0047j	Sh. 2 of 2
2-20-2008						-		
In.	Date	Cons.	Resp.	Appr.				

REVISIONS	BY

IMPROVEMENTS TO WASTEWATER COLLECTION SYSTEM

LIFT STATION CONSTRUCTION DETAILS

ELECTRICAL STANDARDS

FINAL SUBMITTAL

EMERALD COAST UTILITIES AUTHORITY

APPROVED BY:

Drawn:
Designed:
Checked:
Date: MAY '13
Scale:
Project No:
Sheet No. 16
OF 18 Sheets

GENERAL ELECTRICAL NOTES

NEW WORK:

1. ENTIRE ELECTRICAL INSTALLATION SHALL BE IN ACCORDANCE WITH THE LATEST EDITION (UNLESS NOTED OTHERWISE) OF THE FOLLOWING CODES AND STANDARDS:
   1.1. NATIONAL ELECTRICAL CODE (NFPA 70).
   1.2. STANDARD FOR FIRE PROTECTION IN WASTEWATER TREATMENT AND COLLECTION FACILITIES (NFPA 820).
2. THE CONTRACTOR SHALL BE RESPONSIBLE FOR READING ALL PROJECT SPECIFICATIONS AND WILL BE RESPONSIBLE FOR MEETING ALL REQUIREMENTS OUTLINED IN THE SPECIFICATIONS.
3. CONTRACTOR SHALL COORDINATE ALL WORK WITH OTHER TRADES PRIOR TO ROUGH-IN AND INSTALLATION.
4. WORKING SPACE FOR ALL ELECTRICAL AND CONTROL EQUIPMENT OPERATING AT 600V VOLTS OR LESS TO GROUND AND LIKELY TO REQUIRE EXAMINATION, ADJUSTMENT, SERVICING, OR MAINTENANCE WHILE ENERGIZED SHALL COMPLY WITH NEC, ARTICLE 110.26.
5. THE ELECTRICAL DESIGN PROVIDES A NUMBER OF BRANCH CIRCUITS, AMPACITY AND OVERCURRENT PROTECTION FOR OTHER DIVISIONS DESIGN BASIS EQUIPMENT CONFORMING TO MANUFACTURER'S SPECIFICATIONS AVAILABLE AT TIME OF DESIGN. THE CONTRACTOR SHALL VERIFY ALL EQUIPMENT LOADS PRIOR TO ROUGH-IN. IF REQUIREMENTS OF EQUIPMENT ACTUALLY PROVIDED UNDER CONTRACT FOR CONSTRUCTION ARE DIFFERENT, CONTRACTOR SHALL MAKE ALL CHANGES NECESSARY WITHOUT INCREASE IN THE CONTRACT AMOUNT. SUCH CHANGES SHALL BE BASED UPON REQUIREMENTS, NAMEPLATE VALUES AND CODE REQUIREMENTS, WHICHEVER IS MORE STRINGENT, AND MAY INCLUDE, BUT ARE NOT LIMITED TO: SIZE OF CONDUCTORS, SIZE OF CONDUIT, QUANTITY OF CONDUCTORS AND CONDUITS, TYPE AND SIZE OF CIRCUIT BREAKER OR DISCONNECT, OVERLOADS, FULL-VOLTAGE STARTERS, REDUCED VOLTAGE SOFT STARTERS, VARIABLE FREQUENCY DRIVES, AND FUSE PROTECTION.
6. THE ELECTRICAL CONTRACTOR IS REQUIRED TO COORDINATE, PROVIDE, AND INSTALL A FULLY OPERATIONAL AND CODE COMPLIANT ELECTRICAL SYSTEM. THIS MAY INCLUDE THE ADDITION OF ELECTRICAL ITEMS NOT SHOWN ON THE ELECTRICAL PLANS, BUT REQUIRED FOR SYSTEM OPERATION.
7. CONTRACTOR SHALL COORDINATE INSTALLATION OF ELECTRICAL SERVICE WITH ELECTRICAL UTILITY COMPANY PROVIDING ELECTRICAL SERVICE TO FACILITY. CONTRACTOR SHALL PAY ALL FEES ASSESSED BY ELECTRICAL UTILITY COMPANY TO PROVIDE ELECTRICAL SERVICE TO FACILITY.
8. CONTRACTOR SHALL EXCAVATE AND CONDUCT DEMOLITION SO AS TO AVOID DAMAGE TO EXISTING UTILITIES AND OTHER UNDERGROUND OR CONCEALED ITEMS. IF EXISTING OR NEW ITEMS ARE DAMAGED, THE CONTRACTOR SHALL NOTIFY THE OWNER AT ONCE OF ALL DAMAGE AND SHALL REPAIR (OR REPLACE IF NECESSARY) TO THE ORIGINAL CONDITION TO THE SATISFACTION OF OWNER AND ENGINEER AT NO CHARGE IN THE CONTRACT AMOUNT.
9. THE CONTRACTOR SHALL BE RESPONSIBLE FOR PROVIDING DETAILED ELECTRICAL AND CONTROL EQUIPMENT LAYOUT DRAWINGS TO THE ENGINEER AND OWNER FOR APPROVAL PRIOR TO INSTALLATION.
10. ALL CONDUITS NOT LOCATED UNDER SLAB SHALL HAVE A MINIMUM BURIAL DEPTH OF 42", UNLESS NOTED OTHERWISE.
11. CONDUITS SHALL BE BURIED 42" (MINIMUM) BELOW GRADE WITH MARKER TAPE 6" ABOVE TOP OF CONDUIT, UNLESS NOTED OTHERWISE.
12. MINIMUM SIZE CONDUIT SHALL BE 1" (UNLESS NOTED OTHERWISE).
13. CONDUIT ROUTINGS AND DEVICE/EQUIPMENT LOCATIONS SHOWN ARE DIAGRAMMATIC ONLY. CONTRACTOR SHALL FIELD ROUTE AND LOCATE AS REQUIRED.
14. CONTRACTOR SHALL PROVIDE PULL BOXES IN POWER CIRCUIT CONDUIT AS REQUIRED TO LIMIT THE NUMBER OF BENDS TO A MAXIMUM OF 270° OR THREE 90° BENDS.
15. ALL WIRE SHALL BE COPPER.
16. ALL ELECTRICAL CIRCUITS SHALL INCLUDE A GREEN GROUNDING CONDUCTOR SIZED PER NEC.
17. CONDUCTORS SHALL BE TERMINATED ON TERMINAL BLOCKS.
18. THE CONTRACTOR SHALL TAG ALL POWER AND CONTROL SYSTEM CABLING AT ALL TERMINATION POINTS.
19. FINAL CONNECTION TO ALL EQUIPMENT IS SHOWN DIAGRAMMATIC. PROVIDE FINAL CONNECTION AS REQUIRED PER MANUFACTURER OF EQUIPMENT.
20. CONTRACTOR SHALL MAINTAIN A SET OF PRINTS AND MARK-UP DURING CONSTRUCTION TO REFLECT "AS-BUILT" CONDITIONS. PRINTS SHALL BE DELIVERED TO THE ENGINEER UPON COMPLETION OF THE PROJECT.
21. ALL HARDWARE SHALL BE STAINLESS STEEL.
22. ALUMINUM CONDUIT SHALL BE COATED WITH (2) WRAPS OF ANTI-CORROSION TAPE OR RUN THROUGH A SCHEDULE 80 PVC SLEEVE TO WHEN IN CONTACT WITH CONCRETE.
23. BARE COPPER SHALL BE COATED WITH (2) WRAPS OF ANTI-CORROSION TAPE OR RUN THROUGH A SCHEDULE 80 PVC SLEEVE TO WHEN IN CONTACT WITH CONCRETE.
24. ENGINEER OF RECORD SHALL BE RESPONSIBLE FOR FINAL SIZING OF ALL EQUIPMENT.

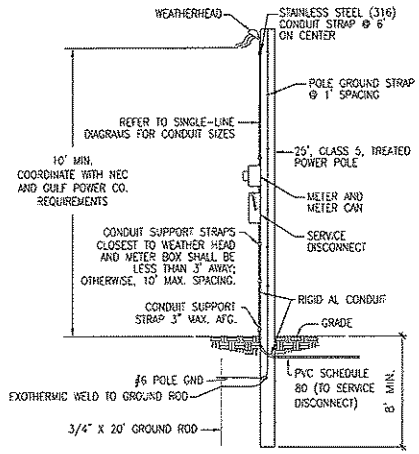

SERVICE LATERAL CONDUIT SHALL BE 3" (MIN) SCHEDULE 80 PVC BELOW GRADE AND 3" (MIN) RIGID AL CONDUIT ABOVE GRADE. ANY REQUIREMENTS BY THE UTILITY COMPANY SHALL PREVAIL OVER THE REQUIREMENTS OUTLINED HERE AND SHALL BE COORDINATED BY THE ELECTRICAL CONTRACTOR PRIOR TO INSTALLATION.

A3 UTILITY POLE DETAIL
NOT TO SCALE

ALL WORK SHALL BE CONSTRUCTED IN ACCORDANCE WITH THE LATEST EDITION OF THE E.C.U.A. STANDARD SPECIFICATIONS

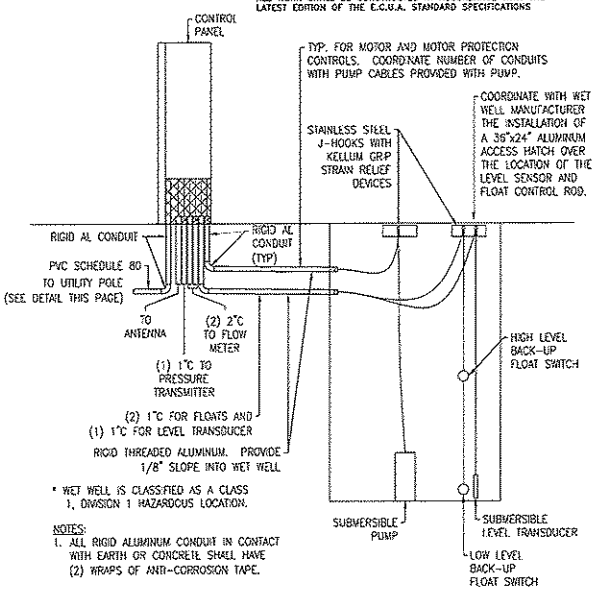

* WET WELL IS CLASSIFIED AS A CLASS 1, DIVISION 1 HAZARDOUS LOCATION.

NOTES:
1. ALL RIGID ALUMINUM CONDUIT IN CONTACT WITH EARTH OR CONCRETE SHALL HAVE (2) WRAPS OF ANTI-CORROSION TAPE.

B4 TYPICAL WET WELL SECTION DETAIL
NOT TO SCALE

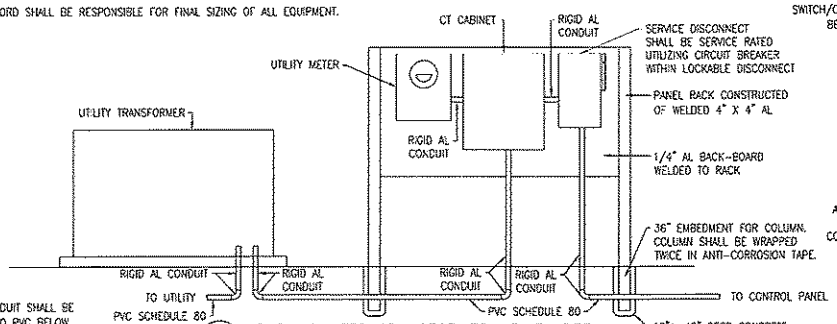

* SERVICE LATERAL CONDUIT SHALL BE 3" (MIN) SCHEDULE 80 PVC BELOW GRADE AND 3" (MIN) RIGID ALUMINUM CONDUIT ABOVE GRADE.

A1 PAD MOUNTED TRANSFORMER UTILITY DETAIL
NOT TO SCALE

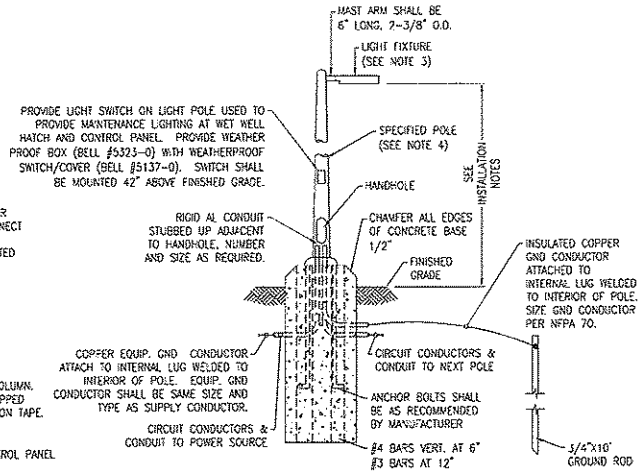

A4 LIGHT POLE INSTALLATION DETAIL
NOT TO SCALE

LIGHTING PERFORMANCE CRITERIA:
1. LIGHTING FIXTURE LAYOUT SHALL BE BASED UPON ACHIEVING 20 FOOT CANDLES (+/- 20%) AT THE FRONT OF THE CONTROL PANEL (WORK-PLANE OF 24" AFG) AND AT THE WET WELL ACCESS HATCH (WORKPLANE OF 0" AFG).
2. GENERAL SECURITY LIGHTING SHALL ENCOMPASS ACCESS GATE AND ALL PIPING/EQUIPMENT AT A MIN: AVERAGE 1 FOOT-CANDLE (+/- 20%, AT WORKPLANE OF 0" AFG).
3. REFER TO LIGHTING CONTROL DIAGRAM ON SHEET No. 18 FOR ADDITIONAL REQUIREMENTS.

LIGHT POLE INSTALLATION NOTES:
1. BURIAL AND DIAMETER DIMENSIONS INDICATED ARE FOR NOMINAL MINIMAL SIZES ONLY. FINAL DIMENSIONS SHALL BE DETERMINED BY A REGISTERED STRUCTURAL ENGINEER IN THE STATE OF FLORIDA. BASED UPON FIXTURES PROVIDED. PROVIDE SIGNED, DATED, AND SEALED PLANS FOR EACH INSTALLATION TYPE AND FIXTURE TYPE AS PART OF LIGHTING SUBMITTAL PACKAGE.
2. THE POLE AND FOUNDATION DESIGN SHALL BE BY A DELEGATED PROFESSIONAL ENGINEER TO MEET THE FOLLOWING CRITERIA:
   2.1. DESIGN WIND SPEED 160 MPH WITH A 1.3 GUST FACTOR. EXPOSURE CATEGORY C.
   2.2. SIZE EMBEDMENT FOR A MAXIMUM PERMANENT POLE DEFLECTION AFTER DESIGN WIND SPEED EVENT OF 1.00".
   2.3. ALUMINUM, ROUND OR SQUARE, TAPERED.
3. FIXTURE SHALL BE AMERICAN ELECTRIC LIGHTING AT82 FIXTURE, 40 LED, 1500mA DRIVER, 120V, TYPE 4, WITH PHOTOCONTROL.
4. REFER TO SPECIFICATIONS SECTION 16521 "EXTERIOR LIGHTING" FOR ADDITIONAL REQUIREMENTS.
5. LIGHT FIXTURES SHALL BE MOUNTED AT 15'-0" (MAXIMUM) ABOVE FINISHED GRADE.

REVISIONS	BY

IMPROVEMENTS TO WASTEWATER COLLECTION SYSTEM

LIFT STATION CONSTRUCTION DETAILS

ELECTRICAL STANDARDS

FINAL SUBMITTAL

EMERALD COAST UTILITIES AUTHORITY

APPROVED BY:

Drawn:
Designed:
Checked:
Date: MAY '13
Scale:
Project No:
Sheet No. 17
OF 18 Sheets

ALL WORK SHALL BE CONSTRUCTED IN ACCORDANCE WITH THE LATEST EDITION OF THE E.C.U.A. STANDARD SPECIFICATIONS

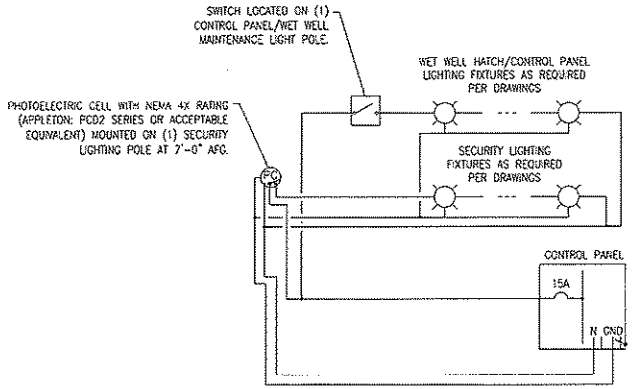

C2 TYPICAL LIGHTING CONTROL DIAGRAM
NOT TO SCALE

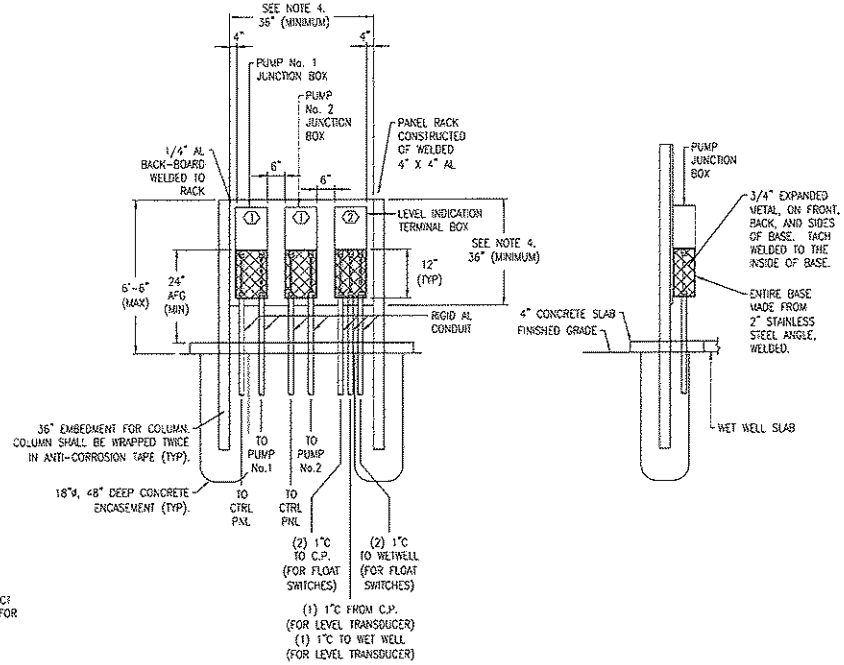

FRONT ELEVATION

SIDE ELEVATION

DETAIL NOTES:

1. THIS DETAIL SHALL ONLY APPLY WHEN THE CONTROL PANEL CANNOT BE PLACED WITHIN 6'-0" OF THE WET WELL TO ALLOW FOR CONNECTION OF STANDARD 50 FOOT PUMP CABLE CONNECTIONS.
2. BACKBOARD SHALL BE PLACED AT THE EDGE OF THE WET WELL SLAB BETWEEN THE WET WELL AND CONTROL PANEL.
3. JUNCTION BOXES SHALL BE MOUNTED SUCH THAT THEY ARE FACING THE WET WELL.
4. ENGINEER/CONTRACTOR SHALL SIZE JUNCTION BOXES AND BACKBOARDS BASED UPON INSTALLATION REQUIREMENTS PROVIDED AT TIME OF DESIGN.

KEY NOTES

① REFER TO "TYPICAL PUMP JUNCTION BOX ELEVATION" (THIS SHEET) FOR ADDITIONAL REQUIREMENTS.

② REFER TO "TYPICAL LEVEL INDICATION JUNCTION BOX ELEVATION" (THIS SHEET) FOR ADDITIONAL REQUIREMENTS.

A4 TYPICAL PUMP JUNCTION BOXES
NOT TO SCALE

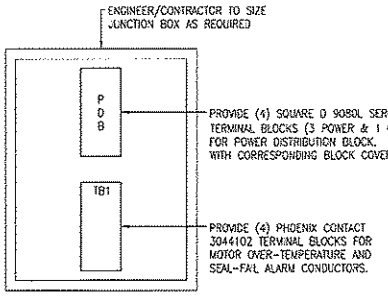

INTERIOR ELEVATION

DETAIL NOTES:

1. ALL TERMINAL BLOCKS SHALL BE PROVIDED WITH CORRESPONDING END BRACKETS AND END COVERS.
2. PROVIDE SEPARATE GROUND LUG IN EACH JUNCTION BOX, BONDED TO JUNCTION BOX.

A1 TYPICAL PUMP JUNCTION BOX ELEVATION
NOT TO SCALE

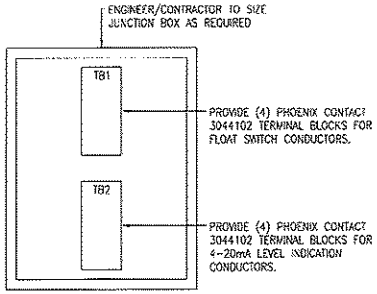

INTERIOR ELEVATION

DETAIL NOTES:

1. ALL TERMINAL BLOCKS SHALL BE PROVIDED WITH CORRESPONDING END BRACKETS AND END COVERS.
2. PROVIDE SEPARATE GROUND LUG IN EACH JUNCTION BOX, BONDED TO JUNCTION BOX.

A3 TYPICAL LEVEL INDICATION JUNCTION BOX ELEVATION
NOT TO SCALE

REVISIONS	BY

IMPROVEMENTS TO WASTEWATER COLLECTION SYSTEM

LIFT STATION CONSTRUCTION DETAILS

ELECTRICAL STANDARDS

FINAL SUBMITTAL

EMERALD COAST UTILITIES AUTHORITY

APPROVED BY

Drawn:	
Designed:	
Checked:	
Date:	MAY '13
Scale:	
Project No:	
Sheet No.	18
	Of 18 Sheets

ALL WORK SHALL BE CONSTRUCTED IN ACCORDANCE WITH THE LATEST EDITION OF THE E.C.U.A. STANDARD SPECIFICATIONS

480V 3ø 1HP – 15HP FULL VOLTAGE STARTER ELECTRICAL STANDARD – ALTERNATE

FOR

EMERALD COAST UTILITY AUTHORITY
ESCAMBIA COUNTY, FL

SHEET NO.	SHEET DESCRIPTION
1	MAIN POWER DISTRIBUTION SCHEMATIC
2	CONTROL SCHEMATIC
3	DIGITAL INPUTS SCHEMATIC
4	DIGITAL OUTPUTS & ANALOG INPUTS SCHEMATIC
5	ANALOG OUTPUTS & STARTER CONTROL SCHEMATIC
6	TERMINAL BLOCK LAYOUT AND FIELD CONNECTIONS
7A	BACK-TO-BACK EXTERIOR PANEL LAYOUT & FIELD CONDUIT REQUIREMENTS
8	POWER & PUMP 1 INTERNAL PANEL LAYOUTS
9	PUMP 2 & CONTROL PANEL INTERNAL LAYOUTS
10	EQUIPMENT LIST
11	HORSEPOWER RELATED EQUIPMENT & POWER CONDUCTORS
12	PANEL TO PANEL CONDUCTORS & EQUIPMENT
13	PANEL TO PANEL WIRING
14A	BACK-TO-BACK STAINLESS STEEL FRAME LAYOUT
15	TABLES, LEGENDS & TAGS
16	ISR INSTRUCTIONS
17	GENERAL NOTES AND DETAILS
18	GENERAL NOTES AND DETAILS

REVISIONS	BY

IMPROVEMENTS TO WASTEWATER COLLECTION SYSTEM

LIFT STATION CONSTRUCTION DETAILS

ELECTRICAL STANDARDS

FINAL SUBMITTAL

EMERALD COAST UTILITIES AUTHORITY

APPROVED BY:

Drawn:
Designed:
Checked:
Date: MAY '13
Scale:
Project No:
Sheet No. 0
Of 18 Sheets

VOLTS	PHASE	FREQ	FLA
480	3	60	XXX
LARGEST MOTOR			
VOLTS	PHASE	FREQ	FLA	HP
480	3	60	XXX	XX
SHORT CIRCUIT CURRENT: 10kA RMS SYMMETRICAL, 480VAC MAXIMUM			

*FOR NAMEPLATE DATA FOR EACH HORSEPOWER RATING SEE SHEET 15 'NAMEPLATE DATA' TABLE

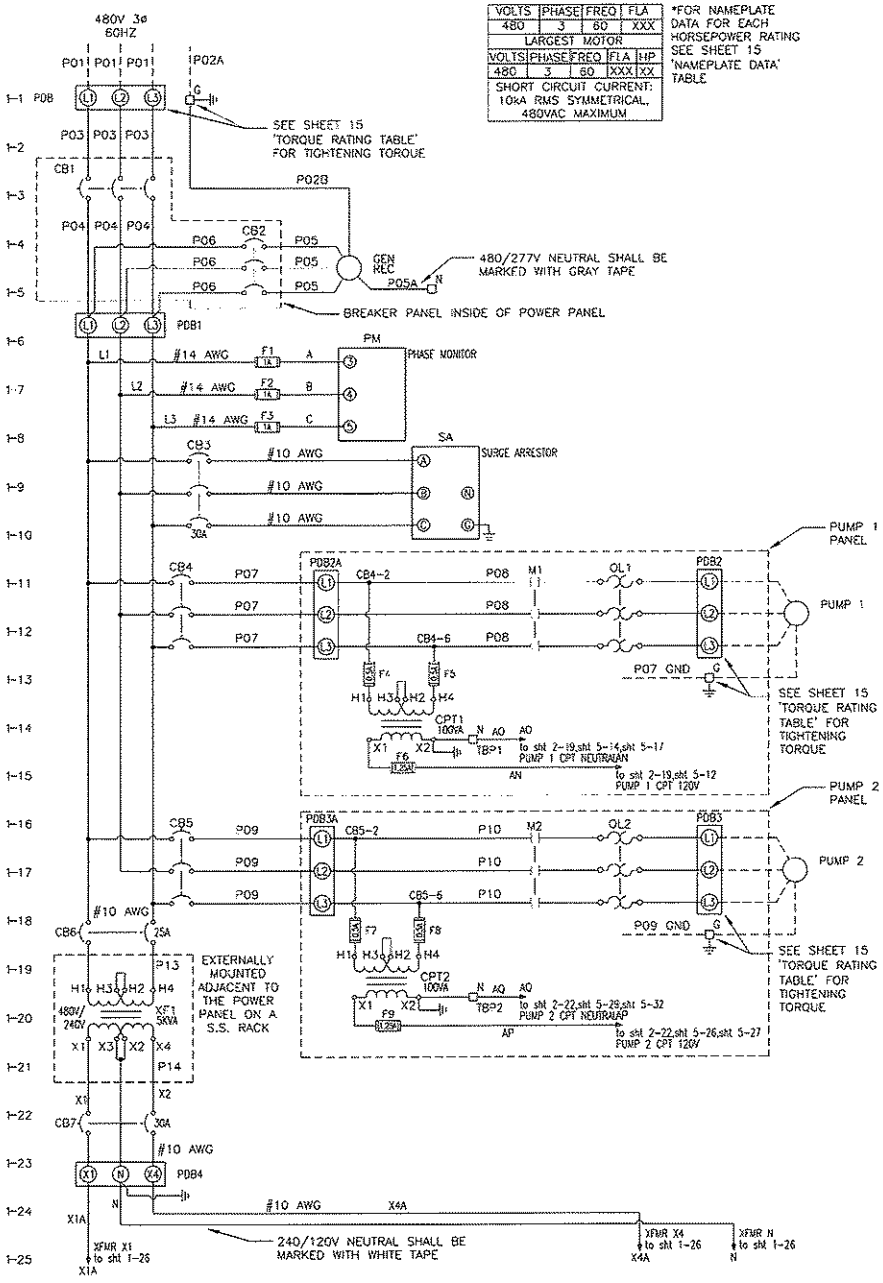

ALL WORK SHALL BE CONSTRUCTED IN ACCORDANCE WITH THE LATEST EDITION OF THE E.C.U.A. STANDARD SPECIFICATIONS

NOTES:

1. THE COMPLETED CONTROL PANEL SHALL BE LABELED AND MANUFACTURED TO MEET U.L. 508A AND 698A CERTIFICATION.
2. CONTROL PANEL WIRING SHALL BE STRANDED COPPER, MINIMUM SIZE #16 AWG WITH 600V 90DEGREE C TYPE THHN INSULATION.
3. CONTROL PANEL WIRING SHALL BE NUMBERED AT BOTH ENDS WITH TYPE WRITTEN, HEAT SHRINKABLE WIRE MARKERS.
4. ALL WIRING WITHIN THE CONTROL PANEL SHALL BE COLOR CODED OR CODED USING ELECTRICAL TAPE IN SIZES WHERE COLORED INSULATION IS NOT AVAILABLE. THE FOLLOWING CODING SHALL BE USED:
   - 4.1. UNGROUNDED AC CONDUCTORS AT SUPPLY VOLTAGE – BLACK
   - 4.2. GROUNDED AC CURRENT CARRYING CONDUCTORS – WHITE
   - 4.3. UNGROUNDED AC CONDUCTORS BELOW SUPPLY VOLTAGE – RED
   - 4.4. UNGROUNDED AC CONTROL CONDUCTORS & CONDUCTORS THAT REMAIN ENERGIZED WHEN THE MAIN DISCONNECT IS OFF – YELLOW
   - 4.5. UNGROUNDED DC CONTROL CONDUCTORS – ORANGE
   - 4.6. GROUNDED DC CURRENT CARRYING CONDUCTORS – BROWN
   - 4.7. INTRINSICALLY SAFE WIRING – BLUE
   - 4.8. GROUND CONDUCTORS – GREEN
5. SEE SHEETS 11 & 12 FOR DETAILS REGARDING ALL POWER CONDUCTORS LABELED PXX.
6. SEE SHEET 11 'HORSEPOWER RELATED COMPONENTS EQUIPMENT LIST' FOR RATINGS OF OVERCURRENT PROTECTION DEVICES.
7. SEE SHEET 6 FOR TERMINAL BLOCK DESIGNATION AND DESCRIPTIONS.

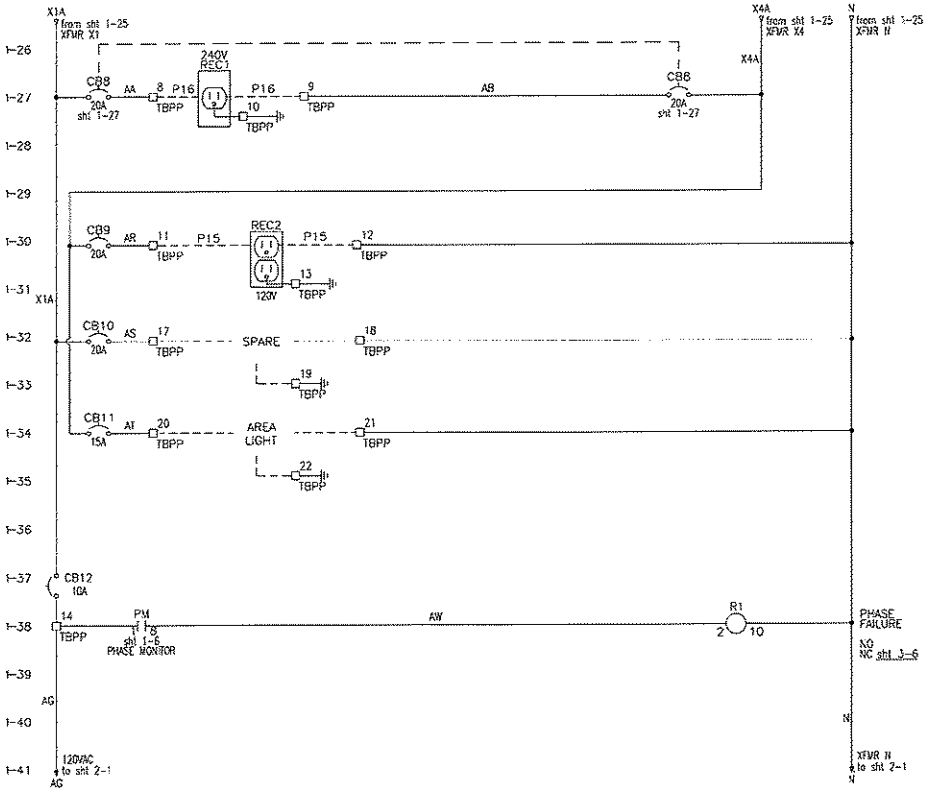

REVISIONS	BY

IMPROVEMENTS TO WASTEWATER COLLECTION SYSTEM

LIFT STATION CONSTRUCTION DETAILS

ELECTRICAL STANDARDS

FINAL SUBMITTAL

EMERALD COAST UTILITIES AUTHORITY

APPROVED BY:

Drawn:
Designed:
Checked:
Date: MAY '13
Scale:
Project No:
Sheet No. 1
OF 18 Sheets

ALL WORK SHALL BE CONSTRUCTED IN ACCORDANCE WITH THE LATEST EDITION OF THE E.C.U.A. STANDARD SPECIFICATIONS

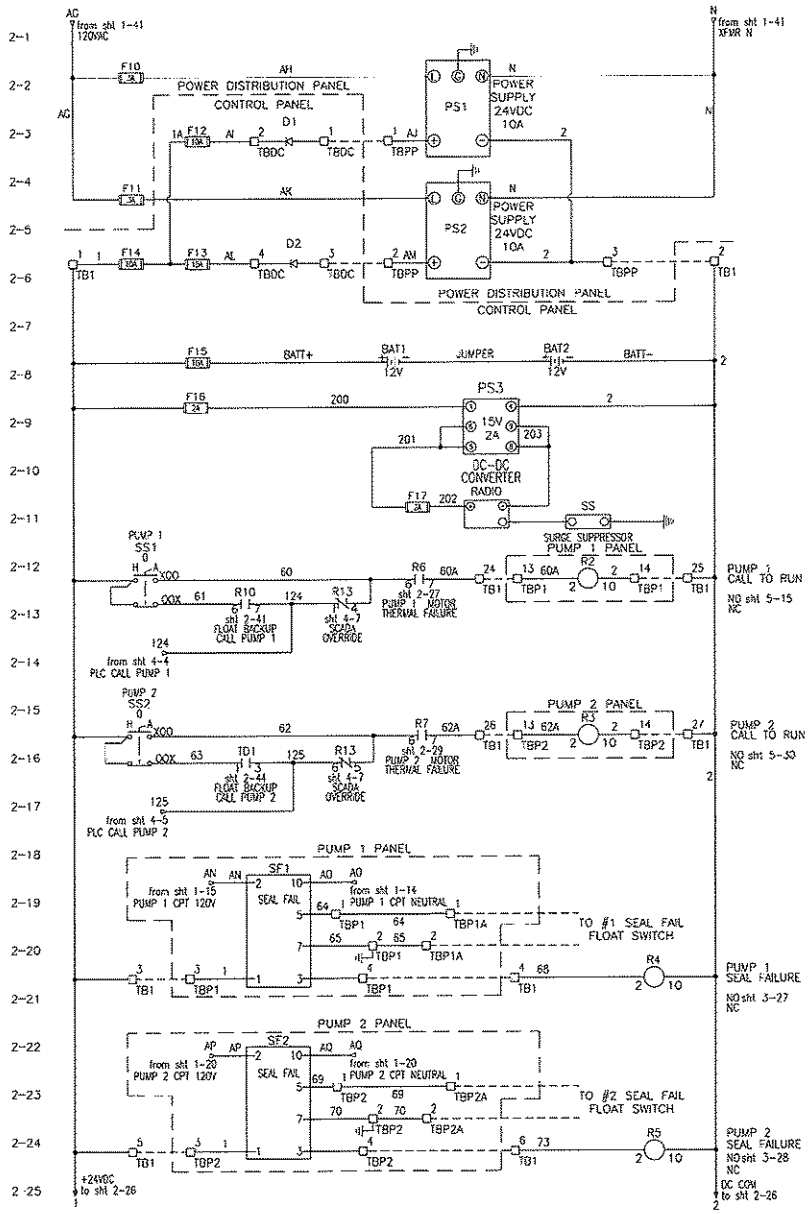

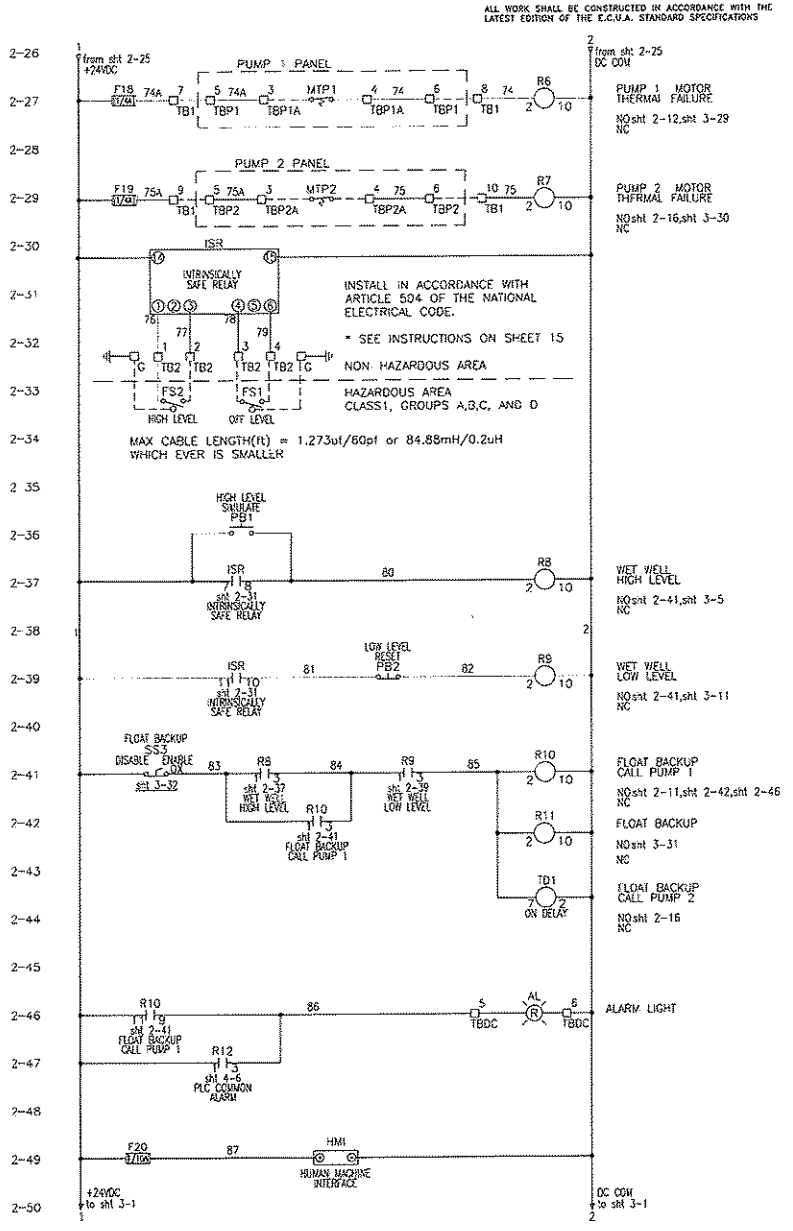

REVISIONS	BY

IMPROVEMENTS TO WASTEWATER COLLECTION SYSTEM

LIFT STATION CONSTRUCTION DETAILS

ELECTRICAL STANDARDS

FINAL SUBMITTAL

EMERALD COAST UTILITIES AUTHORITY

APPROVED BY:

Drawn:	
Designed:	
Checked:	
Date:	MAY '13
Scale:	
Project No:	
Sheet No.	2
	OF 18 Sheets

ALL WORK SHALL BE CONSTRUCTED IN ACCORDANCE WITH THE LATEST EDITION OF THE E.C.U.A. STANDARD SPECIFICATIONS

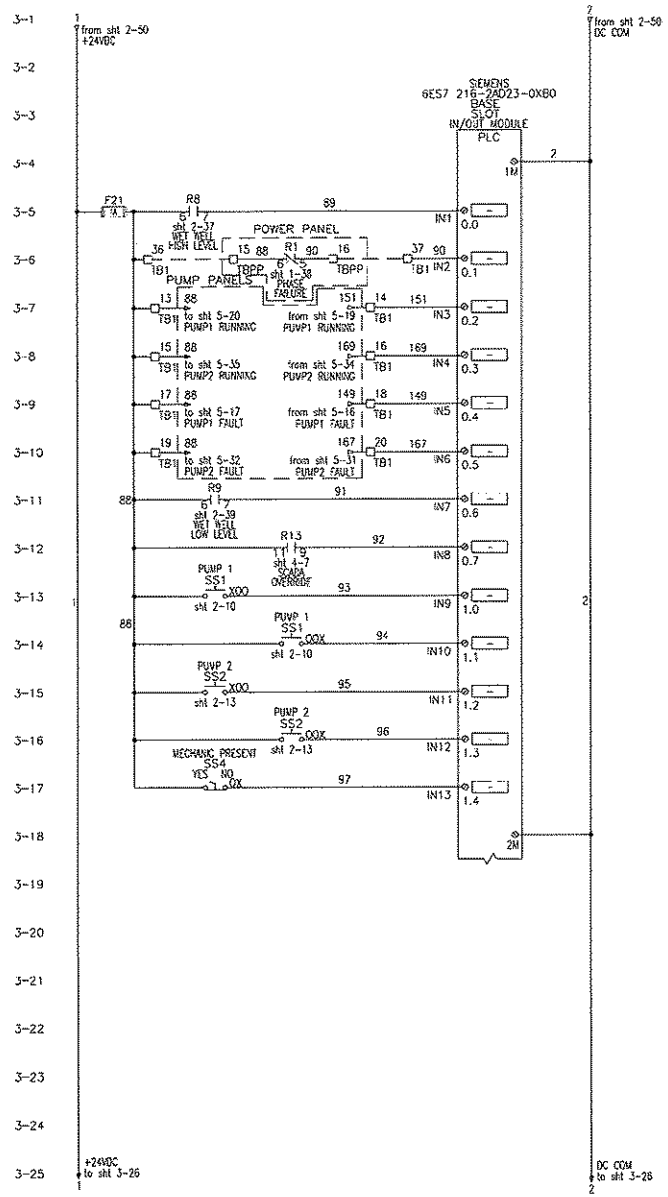

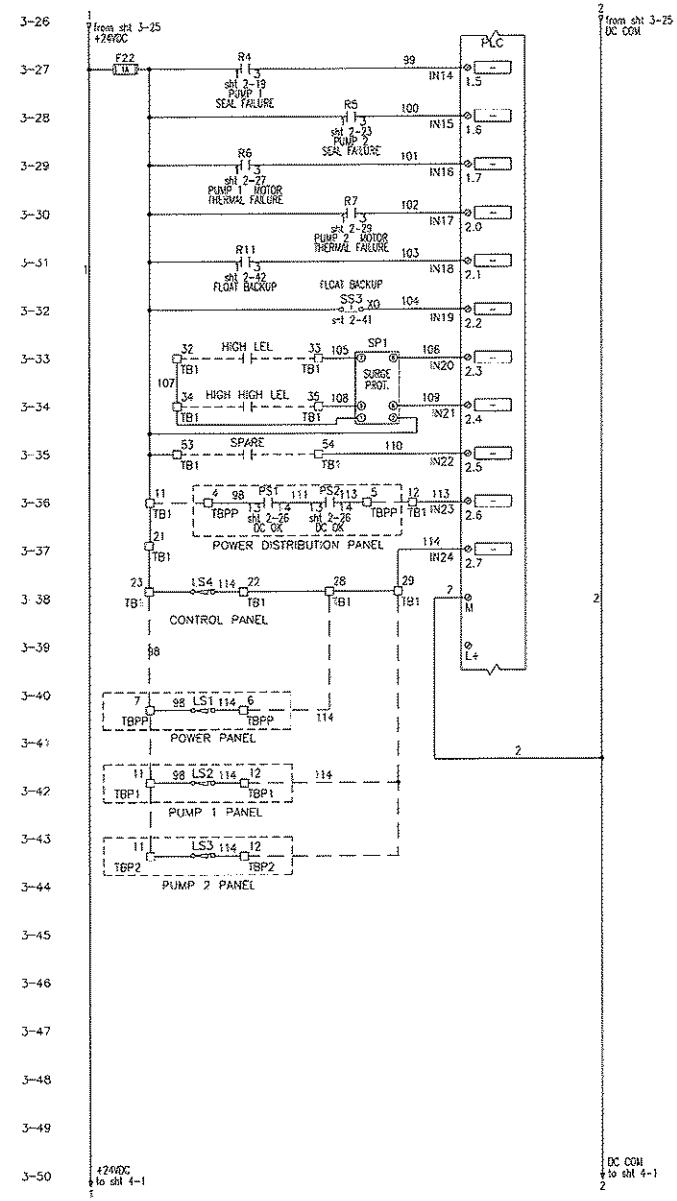

REVISIONS	BY

IMPROVEMENTS TO WASTEWATER COLLECTION SYSTEM

LIFT STATION CONSTRUCTION DETAILS

ELECTRICAL STANDARDS

FINAL SUBMITTAL

ECUA EMERALD COAST UTILITIES AUTHORITY

APPROVED BY:

Drawn:
Designed:
Checked:
Date: MAY '13
Scale:
Project No:
Sheet No. 3
Of 18 Sheets

ALL WORK SHALL BE CONSTRUCTED IN ACCORDANCE WITH THE LATEST EDITION OF THE E.C.U.A. STANDARD SPECIFICATIONS

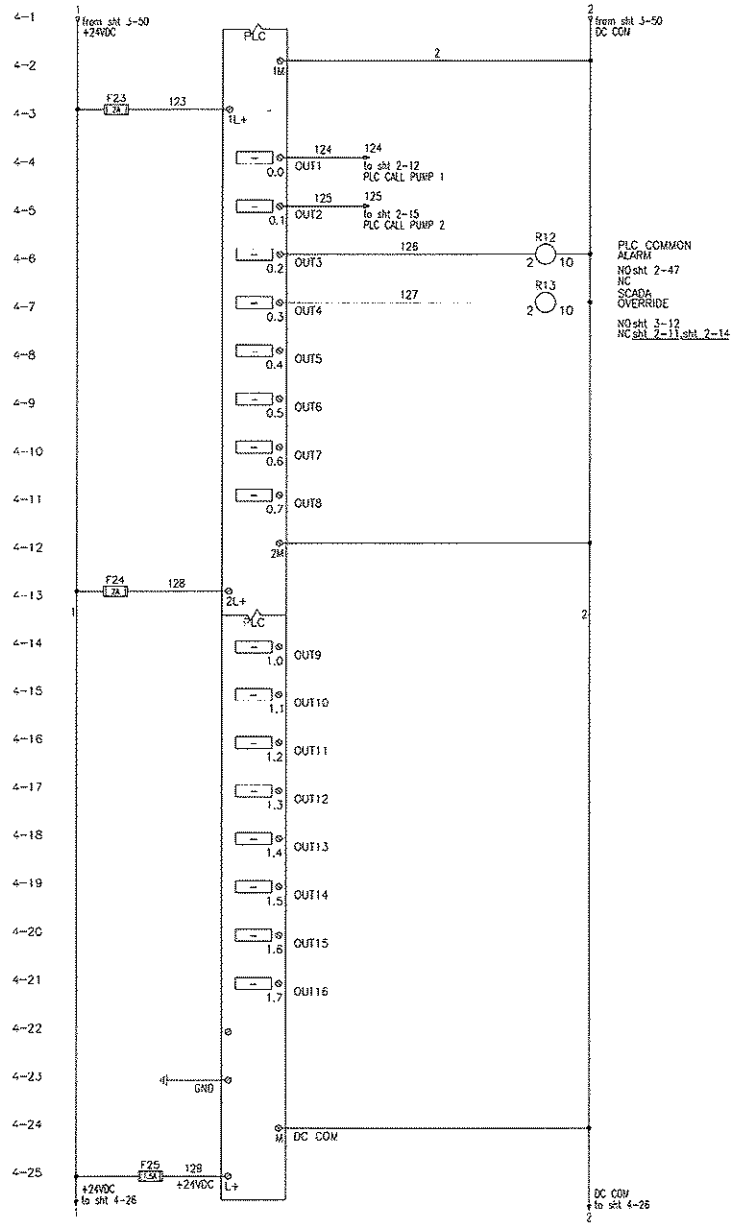

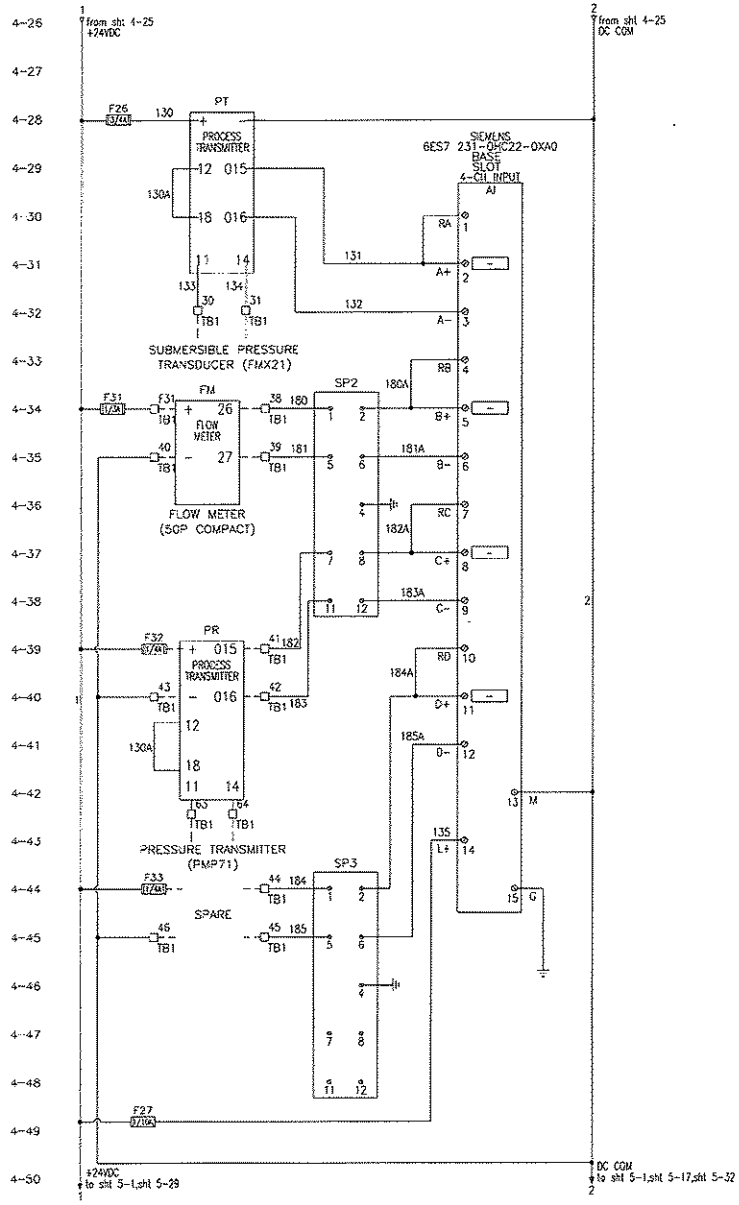

REVISIONS	BY

IMPROVEMENTS TO WASTEWATER COLLECTION SYSTEM

LIFT STATION CONSTRUCTION DETAILS

ELECTRICAL STANDARDS

FINAL SUBMITTAL

EMERALD COAST UTILITIES AUTHORITY

APPROVED BY:

Drawn:	
Designed:	
Checked:	
Date:	MAY '13
Scale:	
Project No:	
Sheet No.	4
	OF 18 Sheets

ALL WORK SHALL BE CONSTRUCTED IN ACCORDANCE WITH THE LATEST EDITION OF THE E.C.U.A. STANDARD SPECIFICATIONS

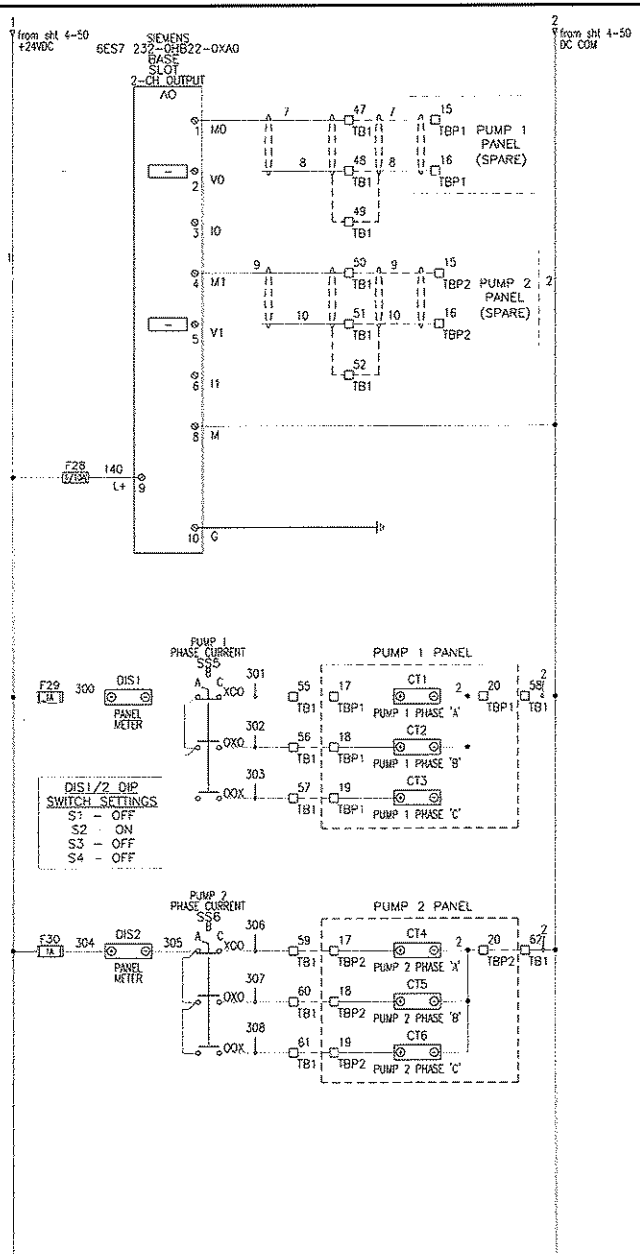

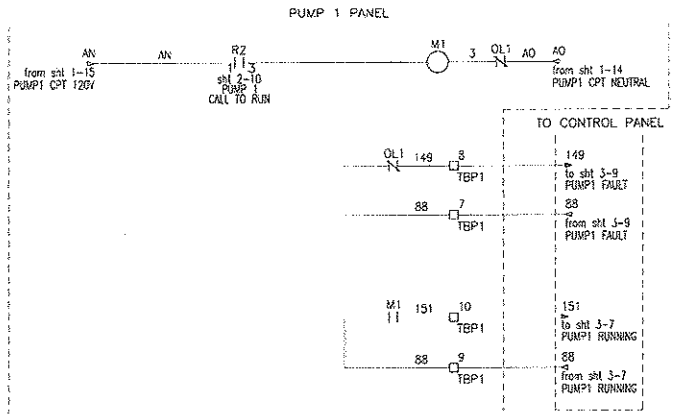

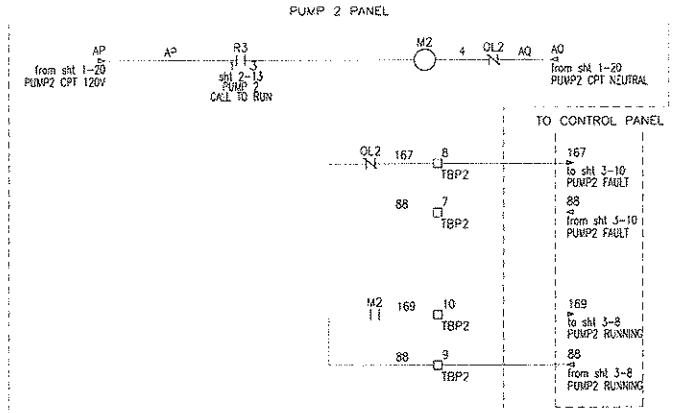

REVISIONS	BY

IMPROVEMENTS TO WASTEWATER COLLECTION SYSTEM

LIFT STATION CONSTRUCTION DETAILS

ELECTRICAL STANDARDS

FINAL SUBMITTAL

EMERALD COAST UTILITIES AUTHORITY

APPROVED BY:

Drawn:	
Designed:	
Checked:	
Date:	MAY '13
Scale:	
Project No:	
Sheet No.	5
	OF 18 Sheets

ALL WORK SHALL BE CONSTRUCTED IN ACCORDANCE WITH THE LATEST EDITION OF THE E.C.U.A. STANDARD SPECIFICATIONS

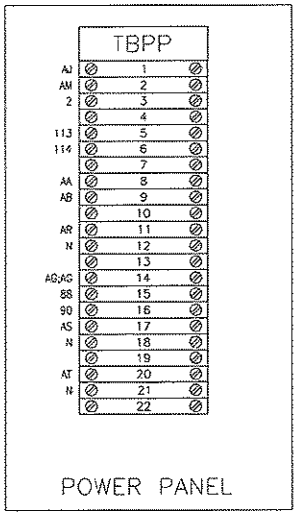

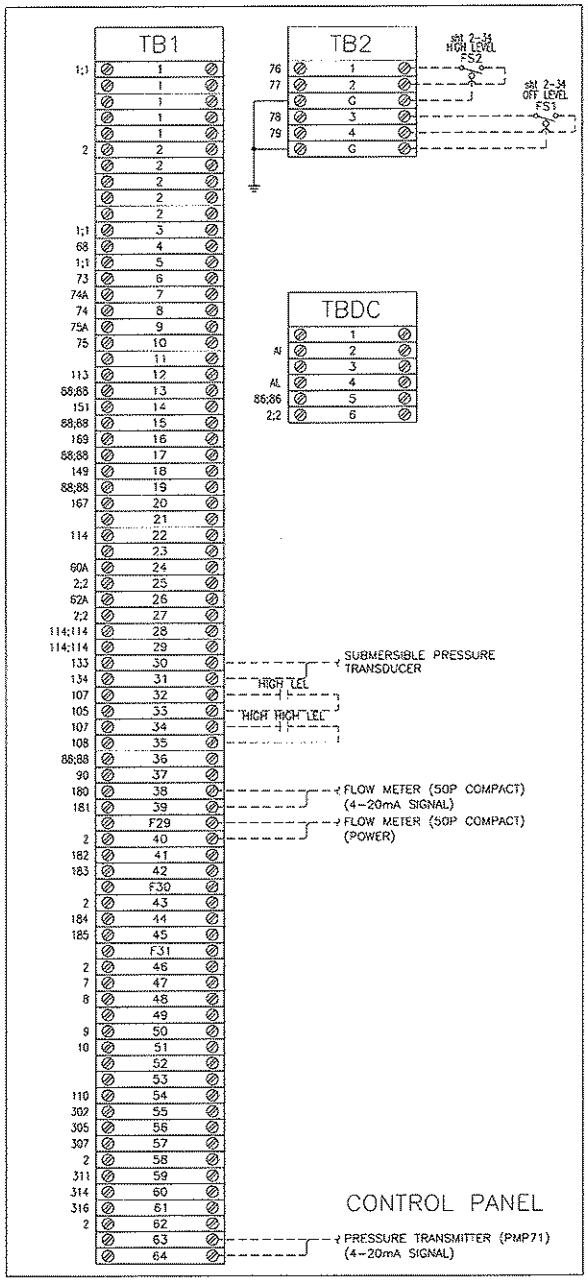

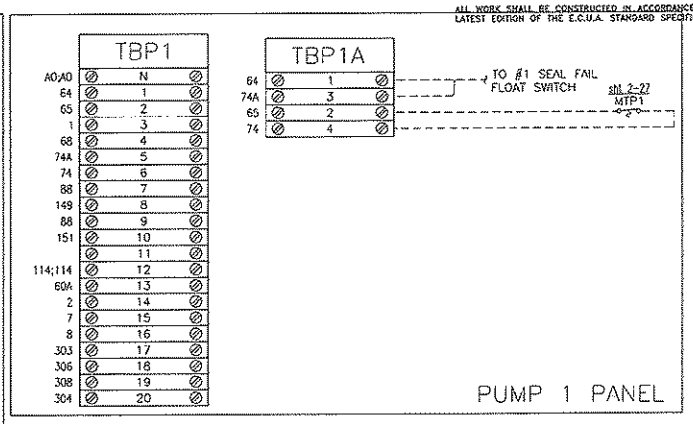

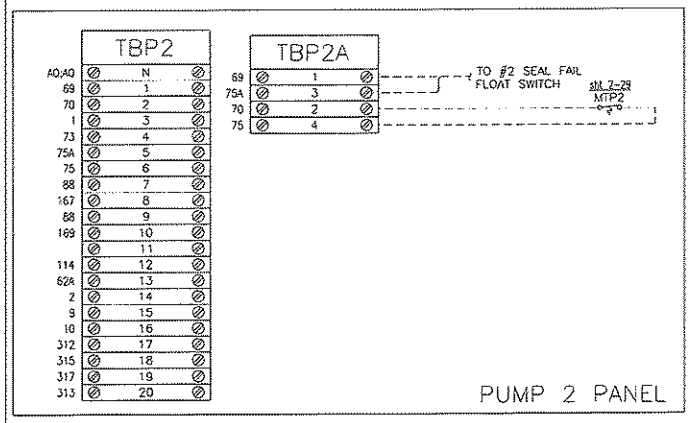

NOTES:

TERMINAL BLOCK DESIGNATIONS:

- TBPP - POWER PANEL TERMINAL BLOCK
- TB1 - CONTROL PANEL TERMINAL BLOCK
- TB2 - INTRINSICALLY SAFE TERMINAL BLOCK
- TBP1 - PUMP 1 TERMINAL BLOCK
- TBPTA - PUMP 1 TERMINAL BLOCK (MOTOR THERMAL AND SEAL FAILURE)
- TBP2 - PUMP 2 TERMINAL BLOCK
- TBPZA - PUMP 2 TERMINAL BLOCK (MOTOR THERMAL AND SEAL FAILURE)

TYPICAL FOR ALL TERMINAL BLOCKS ON THIS DRAWING

USE COPPER CONDUCTORS ONLY
75 DEG C (167 DEG F)
5.3-7.0 LB/IN TIGHTENING TORQUE

REVISIONS	BY

IMPROVEMENTS TO WASTEWATER COLLECTION SYSTEM

LIFT STATION CONSTRUCTION DETAILS

ELECTRICAL STANDARDS

FINAL SUBMITTAL

EMERALD COAST UTILITIES AUTHORITY

APPROVED BY:

Drawn:
Designed:
Checked:
Date: MAY '13
Scale:
Project No:
Sheet No. 6
OF 18 Sheets

ALL WORK SHALL BE CONSTRUCTED IN ACCORDANCE WITH THE LATEST EDITION OF THE E.C.U.A. STANDARD SPECIFICATIONS

NOTES

1. SEE SHEET 15 FOR SCHEDULES, LEGENDS AND PANEL TAGS.

ATTENTION

THIS LAYOUT IS ONE OF TWO (2) POSSIBLE CHOICES -- SEE SHEET 7 FOR THE OTHER OPTION. IF THIS LAYOUT OPTION IS SELECTED, SEE SHEET 14A FOR ASSOCIATED RACK DETAILS.

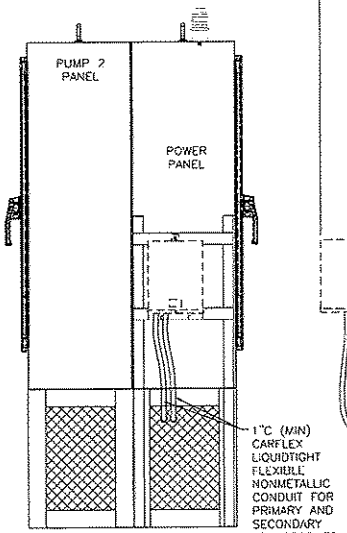

LEFT SIDE

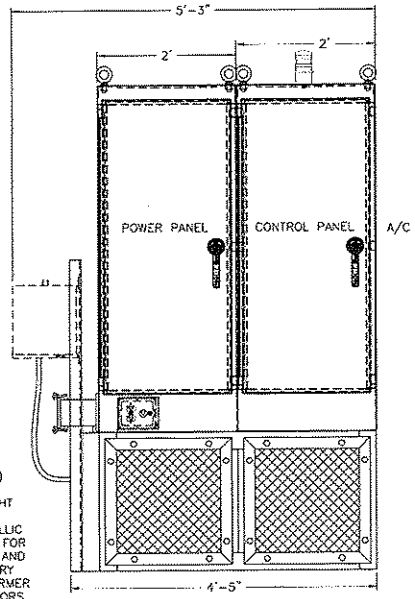

FRONT

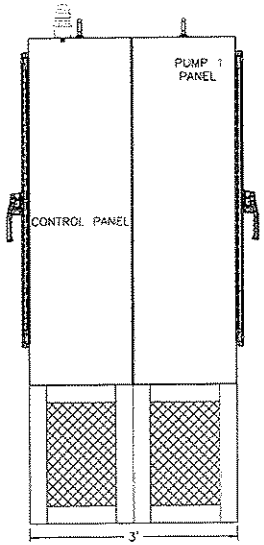

RIGHT SIDE

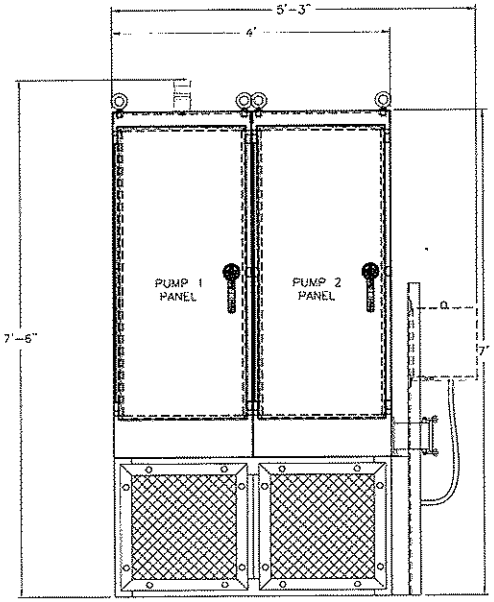

BACK

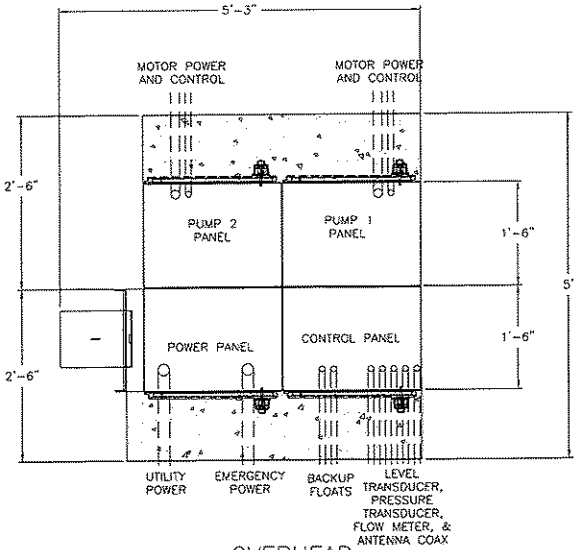

OVERHEAD

REVISIONS	BY

IMPROVEMENTS TO WASTEWATER COLLECTION SYSTEM

LIFT STATION CONSTRUCTION DETAILS

ELECTRICAL STANDARDS

FINAL SUBMITTAL

EMERALD COAST UTILITIES AUTHORITY

APPROVED BY:

Drawn:	
Designed:	
Checked:	
Date:	MAY '13
Scale:	
Project No:	
Sheet No.	7A
	OF 18 Sheets

ALL WORK SHALL BE CONSTRUCTED IN ACCORDANCE WITH THE LATEST EDITION OF THE E.C.U.A. STANDARD SPECIFICATIONS

NOTES

1. SEE SHEET 15 FOR SCHEDULES, LEGENDS AND PANEL TAGS.
2. LAYOUT OF THE POWER & STARTER SECTIONS DEPICTS THE LARGEST POSSIBLE HORSEPOWER CONFIGURATION.

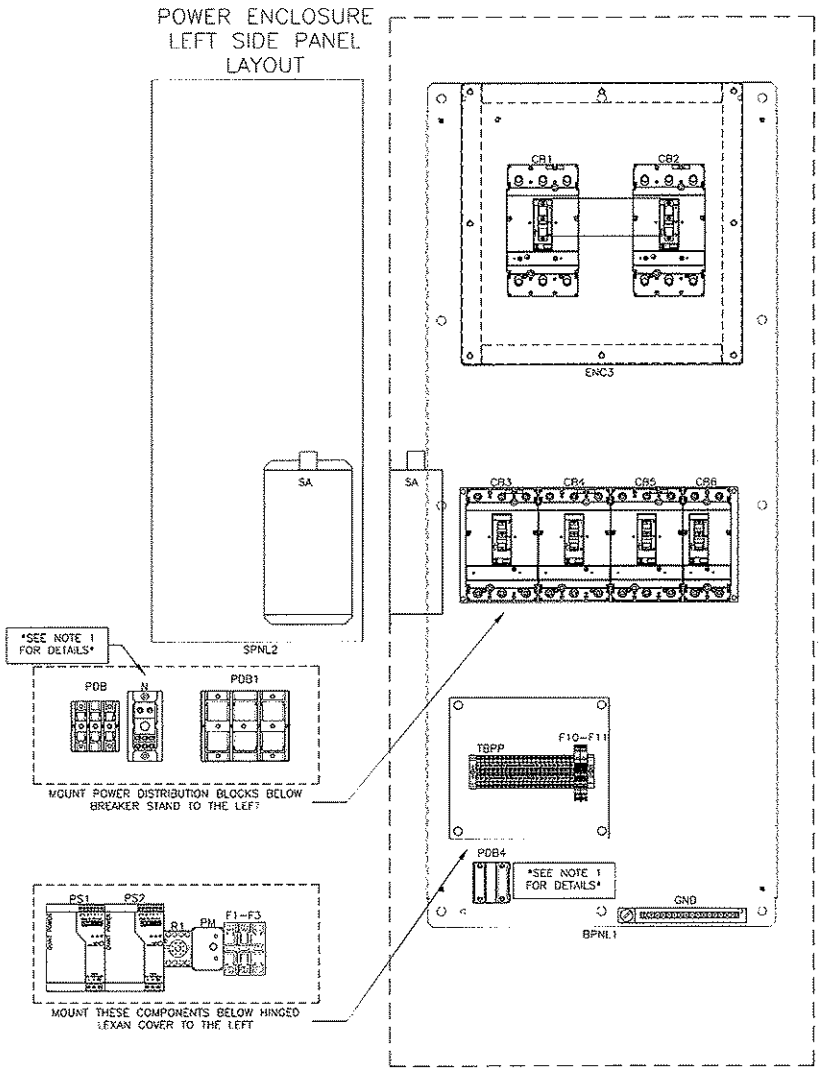

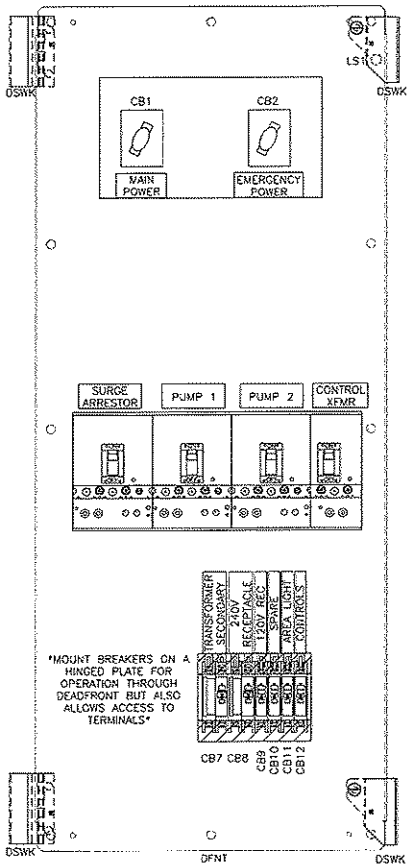

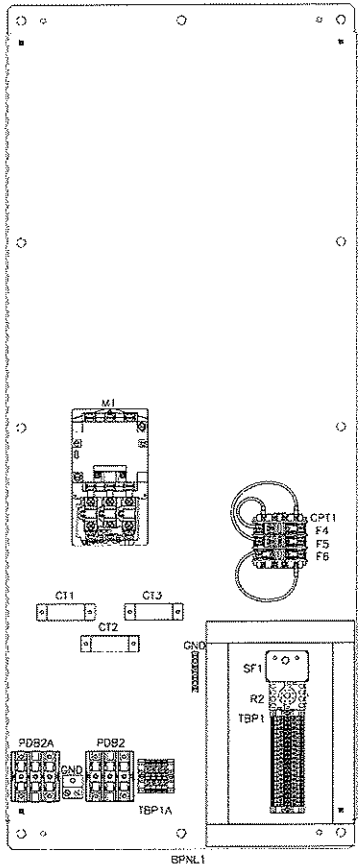

REVISIONS	BY

IMPROVEMENTS TO WASTEWATER COLLECTION SYSTEM

LIFT STATION CONSTRUCTION DETAILS

ELECTRICAL STANDARDS

FINAL SUBMITTAL

EMERALD COAST UTILITIES AUTHORITY

APPROVED BY:

Drawn:	
Designed:	
Checked:	
Date:	MAY '13
Scale:	
Project No:	
Sheet No.	8
	OF 18 Sheets

ALL WORK SHALL BE CONSTRUCTED IN ACCORDANCE WITH THE LATEST EDITION OF THE E.C.U.A. STANDARD SPECIFICATIONS

NOTES

1. SEE SHEET 15 FOR SCHEDULES, LEGENDS AND PANEL TAGS.
2. LAYOUT OF THE VFD SECTION DEPICTS THE LARGEST POSSIBLE HORSEPOWER CONFIGURATION.

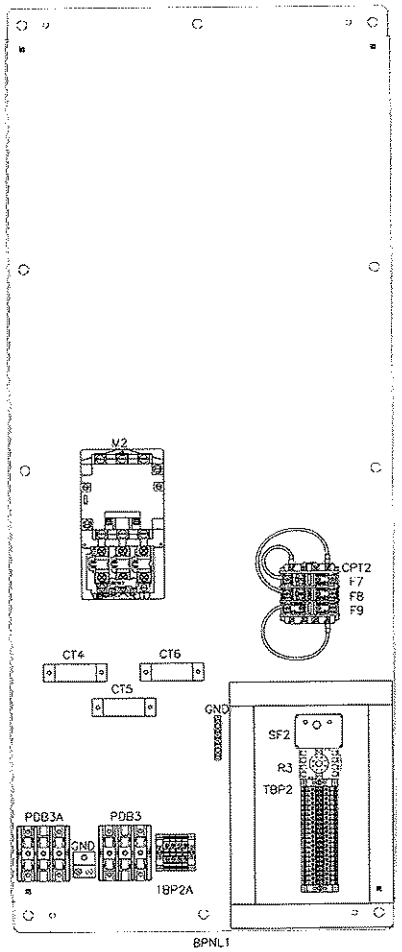

PUMP 2 ENCLOSURE BACKPANEL LAYOUT

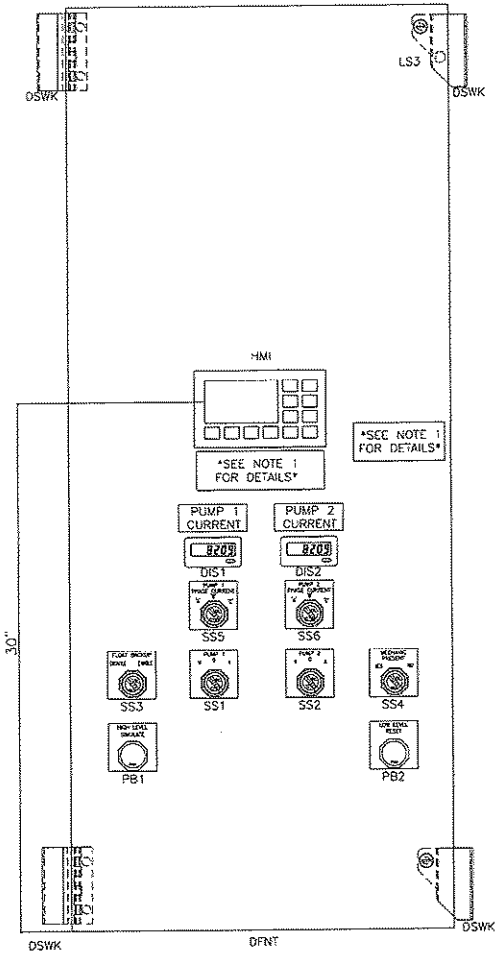

CONTROL PANEL DEADFRONT LAYOUT

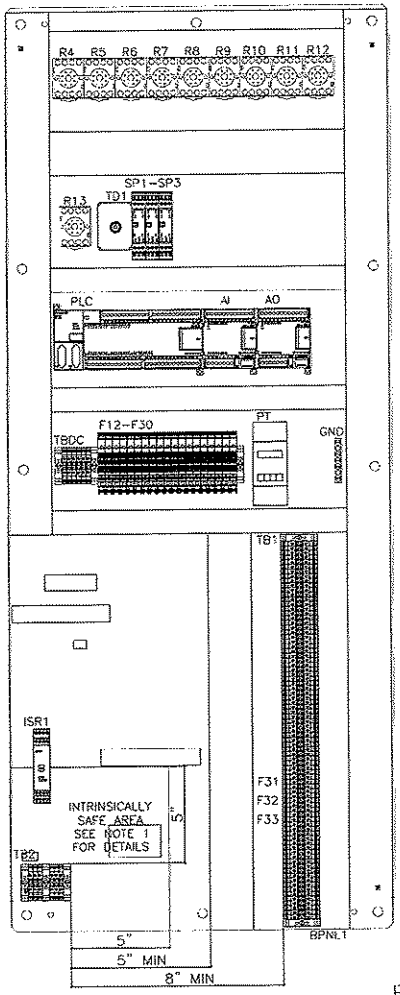

CONTROL ENCLOSURE BACKPANEL LAYOUT

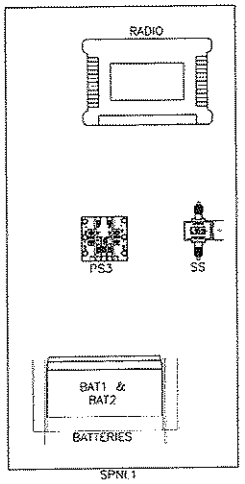

CONTROL ENCLOSURE RIGHT SIDEPANEL LAYOUT

REVISIONS	BY

IMPROVEMENTS TO WASTEWATER COLLECTION SYSTEM

LIFT STATION CONSTRUCTION DETAILS

ELECTRICAL STANDARDS

FINAL SUBMITTAL

EMERALD COAST UTILITIES AUTHORITY

APPROVED BY:

Drawn:	
Designed:	
Checked:	
Date:	MAY '13
Scale:	
Project No:	
Sheet No.	9
	OF 18 Sheets

480V FVNR Equipment List

Item	Tag	Panel	Description	Manufacturer	Model	Qty
1	ENC1	All	60X24X18 NEMA 4X SS Enclosure	Hoffman	A60241658SFSN4	4
2	BPNL1	All	60x24 Painted Steel Backpanel	Hoffman	A60P24F1	4
3	SPNL1	Control	28"H x 12"W Aluminum Sidepanel	EWS	Custom	1
4	DFNT	Power & Control	60x24 Aluminum Deadfront Panel	EWS	Custom	2
5	DSWK	Power & Control	Door Swing Kit	Hoffman	ANADFK	2
6	FRM	All	Expanded Metal Stainless Steel Frame	EWS	SEE DRAWINGS	1
7	PDB	Power	Incoming Power Distribution Block PDB	Square D	9080LBA362101	1
8	PDB	Power	Incoming Power Distribution Block PDB Cover	Square D	9080LB23	1
9	GND	Power	Power Panel Ground Bar	Square D	PK1SGTA-L	1
10	ENC3	Power	16"H x 16"W x 8"D Screw Cover Type 3R Enclosure	Hoffman	A16168GSC	1
11	CB1	Power	600V Main Circuit Breaker	Square D	SEE HP TABLE SHEET 11	1
12	CB2	Power	600V Emergency Circuit Breaker	Square D	SEE HP TABLE SHEET 11	1
13	CB1,CB2	Power	Mechanical Interlock for H/J Frame Circuit Breakers	Square D	S29369	1
14	CB1,CB2	Power	Door Mounted Rotary Handle for H/J Frame Circuit Breakers	Square D	S29338	2
15	GEN REC	Power	NEMA 4X Generator Receptacle	Appleton	ADR1044-RS	1
16	GEN REC	Power	NEMA 4X Generator Plug (Ship Loose)	Appleton	ACP1044CO-RS	1
17	PDB1	Power	Main Power Distribution Block PDB1	Square D	9080LBA363206	1
18	PDB1	Power	Main Power Distribution Block PDB1 Cover	Square D	9080LB33	1
19	F1-F3	Power	3 Pole Rejection type Fuse Block	Bussmann	BC6033PQ	1
20	F1-F3	Power	1A Rejection Type Fuse, Class CC	Bussmann	KTK-R-1	3
21	F1-F3	Power	Fuse Cover	Bussmann	SAMI-2N	3
22	PM	Power	480V Phase Monitor	Timemark	A257B	1
23	PM	Power	480V, 8-Pin Relay Base	ABB	OT08PC	1
24	CB3-CB6	Power	Breaker Stand	EWS	Custom	1
25	CB3	Power	30A 480V 3 Pole Circuit Breaker, Main Surge Arrestor	Square D	HOL36030	1
26	SA	Power	Main Surge Arrestor	SSI	SDLA3N4	1
27	CB4, CB5	Power	600V 3 Pole Circuit Breaker, Starter	Square D	SEE HP TABLE SHEET 11	2
28	CB4, CB5	Power	H & J Frame Circuit Breaker Locking System	Square D	S29371	2
29	PDB2A, PDB3A	Pump 1 & 2	Starter Power Distribution Block	Square D	9080LBA362104	2
30	PDB2A, PDB3A	Pump 1 & 2	Starter Power Distribution Block Cover	Square D	9080LB23	2
31	M1, M2	Pump 1 & 2	NEMA Starter	Square D	SEE HP TABLE SHEET 11	2
32	OL1, OL2	Pump 1 & 2	Overload Heaters	Square D	SEE HP TABLE SHEET 11	2
33	OL1, OL2	Pump 1 & 2	Overload Contact, (2) N.C.	Square D	9999-SO5	2
34	GND	Pump 1 & 2	Motor Ground Lug	NSI	2-OT	2
35	PDB2, PDB3	Pump 1, 2 & Control	Motor Power Distribution Block PDB2&3, (1)#14-2/0.....(1)#14-2/0	Square D	9080LBA362101	2
36	PDB2, PDB3	Pump 1 & 2	Motor Power Distribution Block PDB2&3 Cover	Square D	9080LB23	2
37	F4, F5, F7, F8	Pump 1 & 2	1/2A Rejection Type Fuse, VFD CPT Primary	Bussmann	FNQ-R-1/2	4
38	CPT1, CPT2	Pump 1 & 2	480/120V 100VA Transformer	Square D	9070TF100D1	2
39	CPT1, CPT2	Pump 1 & 2	Transformer Finger Safe Cover, VFD CPT Primary	Square D	9070FSC-1	2
40	CPT1, CPT2	Pump 1 & 2	Fuse Puller, VFD CPT	Square D	9070FP-1	2
41	F6, F9	Pump 1 & 2	1-1/4A Fuse, VFD CPT Secondary	Bussmann	FNQ-1-1/4	2
42	CB6	Power	25A 480V 2 Pole Circuit Breaker, XF1 Transformer Primary	Square D	HDL26025	1
43	XF1	Power	5kVA 480V/240-120V Transformer, NEMA 3R Stainless Steel	Square D	SS1FSS	1
44	CB7-CB11	Power	Hinged Aluminum Bracked for Mounting 240/120V Circuit Breakers through Deadfront	EWS	Custom	1
45	CB7	Power	30A 240/120V 2 Pole Circuit Breaker, XF1 Transformer Secondary	Square D	QOU230	1
46	PDB4	Power	240V/120V Power Distribution Block PDB4, (1) #14-2 ... (4) #18-10	Square D	9080LBA361104	1
47	CB8	Power	20A, 240V, 2 Pole Circuit Breaker	Square D	QOU220	1
48	REC1	Power	20A, 250V, 6-20R Receptacle	P&S	5872I	1
49	CB9, CB10	Power	20A, 120V 1 Pole Circuit Breaker	Square D	QOU120	2
50	REC2	Power	120V 20A GFCI Duplex Receptacle NEMA5-20R	P&S	2094-I	1
51	REC1, REC2	Power	Custom Receptacle Cover NEMA 4X S.S.	HOFFMAN	HIDRPSS-MOD	1
52	REC1, REC2	Power	3/4 1G AL FD BOX	Appelton	4CS-1/2	2
53	CB11	Power	15A, 120V, 1 Pole Circuit Breaker	Square D	QOU115	1
54	CB12	Power	10A, 120V, 1 Pole Circuit Breaker	Square D	QOU110	1
55	R1	Power	120V 3PDT General Purpose Relay w/ Indicator Lamp	Potter Brumfield	KRPA-14AN-120	1
56	R1-R13, SF1, SF2	All	11 Pin Relay Base	ABB	NOS-11	15
57	F10, F11	Power	Fused Terminal Block w/ 120V Blown Fuse Indication	Allen Bradley	1492-H4	2
58	-	Power & Control	1492-H4 &H5 Fused Terminal Block End Cover	Allen Bradley	1492-N37	2
59	F10, F11	Power	3A Fuse	Bussmann	AGC-3	2
60	PS1, PS2	Power	10A 24VDC Power Supply	Phoenix Contact	2938604	2
61	D1, D2	Power	10A Diode, P1000A	Newark	51R7094	2
62	-	Power	Custom Stand/Lexan Hinged Cover w/Alum Stand for TBPP & Power Supply Fuses	EWS	Custom	1
63	F12-F20	Control	Fused Terminal Block w/ 24VDC Blown Fuse Indication	Allen Bradley	1492-H5	19
64	F12-F15	Control	10A Fuse	Bussmann	AGC-10	4
65	BAT1, BAT2	Control	12VDC Battery	Power Sonic	PS1290	2

480V FVNR Equipment List

ALL WORK SHALL BE CONSTRUCTED IN ACCORDANCE WITH THE LATEST EDITION OF THE E.C.U.A. STANDARD SPECIFICATIONS

Item	Tag	Panel	Description	Manufacturer	Model	Qty
66	PS3	Control	24VDC-15VDC Converter, 2A	Vicor	V1-J12-EY-B1	1
67	RADIO	Control	400MHz Radio	GE MDS	SD04MD	1
68	RADIO	Control	DB9 Male/Male Gender Changer	Office Depot	946660	1
69	RADIO/SS	Control	3 Foot LMR400UF Coaxial Jumper NMale to TNCMale	Tessco	324503	1
70	SS	Control	Coaxial Surge Suppressor, 50-700MHz	Polyphaser	IS-50NX-C1	1
71	-	-	50FT Coaxial Cable, NMale-Nmale, Wireless Solutions 400-07-07-P50 (Ship Loose)	Tessco	370875	1
72	-	-	400MHz Yagi Antenna w/ N Female Connector, MAXRAD MYA450GN (Ship Loose)	Tessci	37634	1
73	-	-	Antenna Tower 5' Base Section, ROHN R-SB25G5 (Ship Loose)	Tessco	64559	1
74	-	-	Antenna Tower 10' Mid Section, ROHN R-25G (Ship Loose)	Tessco	56866	1
75	-	-	Antenna Tower 9' Top Section, ROHN R-25AG2 (Ship Loose)	Tessco	70080	1
76	-	-	21' 1-1/4" S.S. Antenna Mast (Ship Loose)	Bell Steel	023008	1
77	F18, F19	Control	1/4A Fuse	Bussmann	AGC-1/4	2
78	F16, F17, F23, F24	Control	2A Fuse	Bussmann	AGC-2	4
79	SS1, SS2	Control	3 Position Selector Switch, 30MM	Square D	9001SK543BH2	2
80	R2-R13	Control	24VDC 3PDT General Purpose Relay w/ Indicator Lamp	Potter Brumfield	KRPA-14DN-24	12
81	SF1, SF2	Control	120V Seal Failure Relay	ATC	SPM-120-AAA-10K	2
82	ISR1	Control	Intrinsically Safe Barrier Relay, 24VDC	Pepperl & Fuchs	KFD2-SR2-Ex2.W	1
83	TB2	Control	Terminal Block, Blue TB2	Phoenix Contact	3044115	4
84	TB2	Control	Terminal Block, Blue End Barrier, TB2	Phoenix Contact	3047235	1
85	TB2	Control	Ground Terminal Blocks, TB2	Phoenix Contact	3044128	2
86	PB1, PB2	Control	Push Button, Black 1NO 1NC	Square D	9001SKR1BH13	2
87	SS3, SS4	Control	2 Position Selector Switch, 30MM	Square D	9001SKS11BH2	2
88	TD1	Control	24VDC 0-180 Second Time Delay Relay	Square D	RE48ATM12MW	1
89	TD1	Control	8 Pin Relay Base	ABB	NDS-8	1
90	AL	Control	24VDC Red Alarm Light	Federal Signal	LP3M-012-048R	1
91	F20, F27, F28	Control	1/10A Fuse	Bussmann	AGC-1/10	3
92	HMI	Control	TD400C Text Display	Siemens	6AV6 640-0AA00-0AX1	1
93	F21, F22, F29, F30	Control	1A Fuse	Bussmann	AGC-1	4
94	PLC	Control	S7-200 Dual Com Port Processor w/ 24 DI & 16 DO Points	Siemens	6ES7 216-2AD23-0XB0	1
95	AI	Control	S7-200 4 Point AI Module	Siemens	6ES7 231-0HC22-0XA0	1
96	AO	Control	S7-200 2 Point AO Moduel	Siemens	6ES7 232-0HB22-0XA0	1
97	PLC	Control	S7-200 Communication cable PC/PPI RS-232/485	Siemens	6ES7 901-3CB30-0XA0	1
98	SP1-SP3	Control	Plug In DI Surge Suppression, PT 4x1...DC	Phoenix Contact	2838322	3
99	SP1-SP3	Control	Terminal Block Base for Plugable Surge Supression, PT 4x1-BE	Phoenix Contact	2839363	3
100	LS1-LS4	Control	Panel Intrusion Switches, N.C. Contacts	NSI	76030PS	4
101	F25	Control	1-1/2A Fuse, PLC Supply	Bussmann	AGC-1-1/2	1
102	F26	Control	3/4A Fuse, Process Analyzer	Bussmann	AGC-3/4	1
103	PT	Control	Level Transmitter	Endress & Hauser	RMA42AAAH2	2
104	PT	-	Submersible Level Transducer, 20ft Range w/ 60ft Cable & Mounting Clamp (Ship Loose)	Endress & Hauser	FMX21-FE221GGEZ1APO	1
105	F31-F33	Control	24VDC Fused Terminal Block With Indication	Phoenix Contact	3046050	3
106	F31-F33	Control	1/4A Fuse, Analog Inputs	Bussmann	GMA-250	3
107	TBPP,1,DC,P1, 1A, P2 & 2A	All	Terminal Block, Gray 26-10 AWG Wire	Phoenix Contact	3044102	181
108	TBPP,1,DC,P1, 1A, P2 & 2A	All	Terminal Block End Barrier	Phoenix Contact	3047028	8
109	TBPP,1,DC,P1, 1A, P2 & 2A	All	Terminal Block End Anchor	Phoenix Contact	0800886	17
110	TBP1A, TBP2A	Pump 1 & 2	Terminal Block, Gray 26-8 AWG Wire, TBVFD1A & TBVFD2A	Phoenix Contact	3044131	8
111	GND	Control	Control Panel Ground Bar	Square D	PK5GTA	1
112	-	-	Meter Socket (SHIP LOOSE)	Milbank	UAP9701-RRL	1
113	-	-	Stainless Steel 60" Float (SHIP LOOSE)	Anchor Scientific	P60NO-SST	2
114	-	-	Insulated Ground Neutral (SHIP LOOSE)	Square D	SR400LA	1
115	-	-	Ground Bar Kit (SHIP LOOSE)	Square D	PKOGT1250	1
116	-	-	NEMA 4A S.S. Disconnect (SHIP LOOSE)	Square D	I25DS	1
117	-	-	Antenna Mast Stabilization Plate (Ship Loose)	EWS	Custom	1
118	-	-	Stainless Steel 'U' Bolt, 2" Pole, 5/16" Diameter Bolt w/ 2-1/2" Threads (SHIP LOOSE)			1
119	-	-	5/16" Stainless Steel Flat Washer for 'U' Bolt (SHIP LOOSE)			2
120	-	-	5/16" Stainless Steel Lock Washer for 'U' Bolt (SHIP LOOSE)			2
121	-	-	5/16" Stainless Steel Nut for 'U' Bolt (SHIP LOOSE)			2
122	-	-	Stainless Steel 'U' Bolt, 1/4" Diameter (SHIP LOOSE)			2
123	-	-	1/4" Stainless Steel 1/4" Nut for 'U' Bolt (SHIP LOOSE)			4
124	-	-	1-1/4" Reduction Bushing for Antenna Tower, ROHN R-TBS0 (SHIP LOOSE)	Tessco	36882	1
125	PLC	Control	S7-200 Memory Module	Siemens	6ES7 291BGF230AX0	1
126	N	Power	Generator Neutral Block, (1)#6-400kcmil ... (6)#14-2	Square D	9080LBA163106	1
127	N	Power	Generator Neutral Block Cover	Square D	9080LB31	1
128	SPNL2	Power	32"X12" Aluminum Sidepanel	EWS	Custom	1
129	CT1-CT6	Pump 1 & 2	Current Transducer; 4-20mA; 10, 20 or 50A Range; Loop Powered	NK Technologies	AT1-420-24L-FF	6
130	DIS1, DIS2	Control	4 Digit Loop Powered Process Indicator; 4-20mA	Red Lion	CUB4LP40	2
131	SS5, SS6	Control	3 Position Selector Switch, 30MM	Square D	9001SKS46BH2	2
132	FM	Control	Flow Meter	Endress & Hauser	50P Compact	1
133	PR	Control	Pressure Transmitter	Endress & Hauser	PMP71-AAC1PG1RAA	1

REVISIONS	BY

IMPROVEMENTS TO WASTEWATER COLLECTION SYSTEM

LIFT STATION CONSTRUCTION DETAILS

ELECTRICAL STANDARDS

FINAL SUBMITTAL

ECUA EMERALD COAST UTILITIES AUTHORITY

APPROVED BY:

Drawn:
Designed:
Checked:
Date: MAY '13
Scale:
Project No:
Sheet No. 10
Of 18 Sheets

ALL WORK SHALL BE CONSTRUCTED IN ACCORDANCE WITH THE LATEST EDITION OF THE E.C.U.A. STANDARD SPECIFICATIONS

Horsepower Related Compontents Equipment List								
Item	Tag	Horsepower						
		1	2	3	5	7.5	10	15
Main Circuit Breaker	CB1	HDL36030	HDL36030	HDL36030	HDL36040	HDL36045	HDL36050	HDL36080
Emergency Circuit Breaker	CB2	HDL36030	HDL36030	HDL36030	HDL36040	HDL36045	HDL36050	HDL36080
Starter Circuit Breaker	CB4,CB5	HDL36015	HDL36015	HDL36015	HDL36015	HDL36020	HDL36025	HDL36040
480V 3 Phase FVNR Starter	M1, M2	8536SAO12V02	8536SAO12V02	8536SBO12V02	8536SBO12V02	8536SCO12V02	8536SCO12V02	8536SDO12V02
Overloads	OL1, OL2	B3.00	B4.85	B6.90	B11.5	B17.5	B25	B32

Horsepower Related Power Conductors, CGB's and Hubs								
Conductor Tag		Horsepower						
		1	2	3	5	7.5	10	15
P-01, P-03 & P-04	Description	(3)#10	(3)#10	(3)#10	(3)#8	(3)#8	(3)#8	(3)#4
	Manufacturer	N/A	N/A	N/A	N/A	N/A	N/A	N/A
	Catalog #	N/A	N/A	N/A	N/A	N/A	N/A	N/A
	Length (Max Ft)	N/A	N/A	N/A	N/A	N/A	N/A	N/A
	Cable Dia (in)	0.164"	0.164"	0.164"	0.216"	0.216"	0.216"	0.324"
	Appleton Connector	(3) -CG-1275	(3) -CG-1275	(3) -CG-1275	(3) -CG-1850	(3) -CG-1850	(3) -CG-1850	(3) -CG-3150
	Connector Range	0.125"-0.250"	0.125"-0.250"	0.125"-0.250"	0.187"-0.312"	0.187"-0.312"	0.187"-0.312"	0.312"-0.437"
	Meyers Hub	(3) 3/4" - STA-2	(3) 3/4" - STA-2	(3) 3/4" - STA-2	(3) 1/2" - STA-1	(3) 1/2" - STA-1	(3) 1/2" - STA-1	(3) 1/2" - STA-1
P-02A	Description	(1)#10	(1)#10	(1)#10	(1)#10	(1)#10	(1)#10	(1)#8
	Manufacturer	N/A	N/A	N/A	N/A	N/A	N/A	N/A
	Catalog #	N/A	N/A	N/A	N/A	N/A	N/A	N/A
	Length (Max Ft)	N/A	N/A	N/A	N/A	N/A	N/A	N/A
	Cable Dia (in)	0.164"	0.164"	0.164"	0.164"	0.164"	0.164"	0.216"
	Appleton Connector	(1)-GC-1250	(1)-GC-1250	(1)-GC-1250	(1)-GC-1250	(1)-GC-1250	(1)-GC-1250	(1)-GC-1850
	Connector Range	0.125"-0.187"	0.125"-0.187"	0.125"-0.187"	0.125"-0.187"	0.125"-0.187"	0.125"-0.187"	0.187"-0.312"
	Hub	(1) 1/2" - STA-1	(1) 1/2" - STA-1	(1) 1/2" - STA-1	(1) 1/2" - STA-1	(1) 1/2" - STA-1	(1) 1/2" - STA-1	(1) 1/2" - STA-1
P-02B	Description	(1)#10	(1)#10	(1)#10	(1)#10	(1)#10	(1)#10	(1)#8
	Manufacturer	Southwire	Southwire	Southwire	Southwire	Southwire	Southwire	Southwire
P-05 & P-06	Description	(3)#10	(3)#10	(3)#10	(3)#8	(3)#8	(3)#8	(3)#4
	Manufacturer	Southwire	Southwire	Southwire	Southwire	Southwire	Southwire	Southwire
	Catalog #	N/A	N/A	N/A	N/A	N/A	N/A	N/A
	Length (Max Ft)	N/A	N/A	N/A	N/A	N/A	N/A	N/A
	Cable Dia (in)	0.164"	0.164"	0.164"	0.216"	0.216"	0.216"	0.324"
	Appleton Connector	(3) -CG-1275	(3) -CG-1275	(3) -CG-1275	(3) -CG-1850	(3) -CG-1850	(3) -CG-1850	(3) -CG-3150
	Connector Range	0.125"-0.250"	0.125"-0.250"	0.125"-0.250"	0.187"-0.312"	0.187"-0.312"	0.187"-0.312"	0.312"-0.437"
	Hub	(3) 3/4" - STA-2	(3) 3/4" - STA-2	(3) 3/4" - STA-2	(3) 1/2" - STA-1	(3) 1/2" - STA-1	(3) 1/2" - STA-1	(3) 1/2" - STA-1
P-07 & P-09	Description	(3)#14 W/G, TC	(3)#14 W/G, TC	(3)#14 W/G, TC	(3)#14 W/G, TC	(3)#14 W/G, TC	(3)#14 W/G, TC	(3)#10 W/G, TC
	Manufacturer	Houston Wire	Houston Wire	Houston Wire	Houston Wire	Houston Wire	Houston Wire	Houston Wire
	Catalog #	HW151 1403G	HW151 1403G	HW151 1403G	HW151 1403G	HW151 1403G	HW151 1403G	HW151 1003G
	Length (Max Ft)	19 FT	19 FT	19 FT	19 FT	19 FT	19 FT	19 FT
	Cable Dia (in)	0.364"	0.364"	0.364"	0.364"	0.364"	0.364"	0.447"
	Appleton Connector	(2) -CG-3150	(2) -CG-3150	(2) -CG-3150	(2) -CG-3150	(2) -CG-3150	(2) -CG-3150	(2) -CG-3750
	Connector Range	0.312"-0.437"	0.312"-0.437"	0.312"-0.437"	0.312"-0.437"	0.312"-0.437"	0.312"-0.437"	0.375"-0.500"
	Hub	(2) 1/2" - STA-1	(2) 1/2" - STA-1	(2) 1/2" - STA-1	(2) 1/2" - STA-1	(2) 1/2" - STA-1	(2) 1/2" - STA-1	(2) 1/2" - STA-1
P-08 & P-10	Description	(3)#14	(3)#14	(3)#14	(3)#14	(3)#14	(3)#14	(3)#10
	Manufacturer	Southwire	Southwire	Southwire	Southwire	Southwire	Southwire	Southwire

REVISIONS	BY

IMPROVEMENTS TO WASTEWATER COLLECTION SYSTEM

LIFT STATION CONSTRUCTION DETAILS

ELECTRICAL STANDARDS

FINAL SUBMITTAL

EMERALD COAST UTILITIES AUTHORITY

APPROVED BY:

Drawn:
Designed:
Checked:
Date: MAY '13
Scale:
Project No:
Sheet No. 11
Of 18 Sheets

ALL WORK SHALL BE CONSTRUCTED IN ACCORDANCE WITH THE LATEST EDITION OF THE E.C.U.A. STANDARD SPECIFICATIONS

Power & Control Conductors, CGB's and Hubs

Cable Number	Description	Manufacturer	Catalog Numer	Length (Max Ft)	Cable Diameter	Appleton Liquidtight Cable Connector	Connector Cable Range	Crouse-Hinds Myers Hub	From Panel/Enclosure	To Panel/Enclosure
P-13	(3)#8 AWG W/GND, Tray Cable	Houston Wire & Cable	HW 154 00803	6 FT	0.58"	(1) - CG-5075	0.500"-0.625"	(1) 3/4" - STA-2	Power Panel	480/240-120V Transformer
P-14	(3)#6 AWG W/GND, Tray Cable	Houston Wire & Cable	HW 154 00603	6 FT	0.69"	(1) - CG-6275	0.625"-0.750"	(1) 3/4" - STA-2	480/240-120V Transformer	Power Panel
P-15	3-1/C #12 AWG	N/A	N/A	AS REQ'D	N/A	N/A	N/A	N/A	Power Panel	Power Panel
P-16	3-1/C #12 AWG	N/A	N/A	AS REQ'D	N/A	N/A	N/A	N/A	Power Panel	Power Panel
C-01	(16) #14 AWG, Tray Cable	Houston Wire & Cable	HW 151 01416	24 FT	0.68"	(2) - CG-6275	0.625"-0.750"	(2) 3/4" - STA-2	Power Panel	Control Panel
C-02	(5) #14 AWG, Tray Cable	Houston Wire & Cable	HW 151 01405	19 FT	0.41"	(2) - CG-3750	0.375"-0.500"	(2) 1/2" - STA-1	Control Panel	Pump 1 Panel
C-03	(16) #14 AWG, Tray Cable	Houston Wire & Cable	HW 151 01416	22 FT	0.68"	(2) - CG-6275	0.625"-0.750"	(2) 3/4" - STA-2	Control Panel	Pump 2 Panel
C-04	1 Pair #16 SH, Tray Cable	Houston Wire & Cable	HW 120 01601	22 FT	0.33"	(2) - CG-2575	0.250"-0.375"	(2) 3/4" - STA-2	Pump 1 Panel	Control Panel
C-05	1 Pair #16 SH, Tray Cable	Houston Wire & Cable	HW 120 01601	19 FT	0.33"	(2) - CG-2575	0.250"-0.375"	(2) 3/4" - STA-2	Pump 2 Panel	Control Panel
PUMP 1-PWR	Per Mfg Specs	N/A	N/A	N/A	N/A	CG Series based on Mfg Specs	N/A	STA Series based on Mfg Specs	Field (Pump 1)	Pump 1 Panel
PUMP 1-MTP	Per Mfg Specs	N/A	N/A	N/A	N/A	CG Series based on Mfg Specs	N/A	STA Series based on Mfg Specs	Field (Pump 1)	Pump 1 Panel
PUMP 1-SF	Per Mfg Specs	N/A	N/A	N/A	N/A	CG Series based on Mfg Specs	N/A	STA Series based on Mfg Specs	Field (Pump 1)	Pump 1 Panel
PUMP 2-PWR	Per Mfg Specs	N/A	N/A	N/A	N/A	CG Series based on Mfg Specs	N/A	STA Series based on Mfg Specs	Field (Pump 2)	Pump 2 Panel
PUMP 2-MTP	Per Mfg Specs	N/A	N/A	N/A	N/A	CG Series based on Mfg Specs	N/A	STA Series based on Mfg Specs	Field (Pump 2)	Pump 2 Panel
PUMP 2-SF	Per Mfg Specs	N/A	N/A	N/A	N/A	CG Series based on Mfg Specs	N/A	STA Series based on Mfg Specs	Field (Pump 2)	Pump 2 Panel
Float Switch 1	Float Switch Cable	BY OTHERS	N/A	N/A	0.56"	(1) - CG-5050	0.500"-0.625"	(1) 1/2" - STA-1	Field (Float Switch)	Control Panel
Float Switch 2	Float Switch Cable	BY OTHERS	N/A	N/A	0.56"	(1) - CG-5050	0.500"-0.625"	(1) 1/2" - STA-1	Field (Float Switch)	Control Panel
Pressure Xducer	Pressure Transducer Cable	BY OTHERS	N/A	N/A	0.35"	(1) - G-3150	0.312"-0.437"	(1) 1/2" - STA-1	Field (Float Switch)	Control Panel
Antenna COAX	Coaxial Cable	BY OTHERS	N/A	N/A	0.408"	(1) - CG-3750	0.375"-0.500"	(1) 1/2" - STA-1	Field (Antenna)	Control Panel

REVISIONS	BY

IMPROVEMENTS TO WASTEWATER COLLECTION SYSTEM

LIFT STATION CONSTRUCTION DETAILS

ELECTRICAL STANDARDS

FINAL SUBMITTAL

EMERALD COAST UTILITIES AUTHORITY

APPROVED BY:

Drawn:
Designed:
Checked:
Date: MAY '13
Scale:
Project No:
Sheet No. 12
Of 18 Sheets

NOTES:

ALL WORK SHALL BE CONSTRUCTED IN ACCORDANCE WITH THE LATEST EDITION OF THE E.C.U.A. STANDARD SPECIFICATIONS

1) ALL SPARE WIRE WILL BE CLEARLY LABELED WITH THE CABLE NUMBER & A SPARE DESIGNATION ON INDIVIDUAL WIRES. THESE SPARES WILL BE LONG ENOUGH TO REACH ANY POINT IN THE PANEL.
2) SPARE CONDUCTORS SHOULD BE TRIMMED AND HEAT SHRINK SHOULD BE USED TO SECURE THE SPARE CONDUCTORS IN THE CABLE.
3) THE INNER CONNECTING CONDUCTORS BETWEEN THE PANELS ARE CODED AS FOLLOWS: THE FIRST GROUP OF CHARACTER IS THE WIRE NUMBER AND THE SECOND GROUP IS THE COLOR (I.E. 1(BK) SIGNIFIES THAT THE WIRE NUMBER IS 1 AND THE COLOR IS BLACK). WIRE COLOR CODE AS FOLLOWS: BK-BLACK, RD-RED, BU-BLUE, OR-ORANGE, YL-YELLOW, BN-BROWN. FOR COLORS THAT ARE DENOTED AS XX/YY, XX IS THE BASE COLOR AND YY IS THE SPIRAL STRIPE (I.E. RD/BK IS A RED WIRE WITH A BLACK SPIRAL STRIPE).
4) SEE SHEETS 11 & 12 FOR PANEL TO PANEL INNER CONNECTING CONDUCTOR AND CABLE DETAILS.

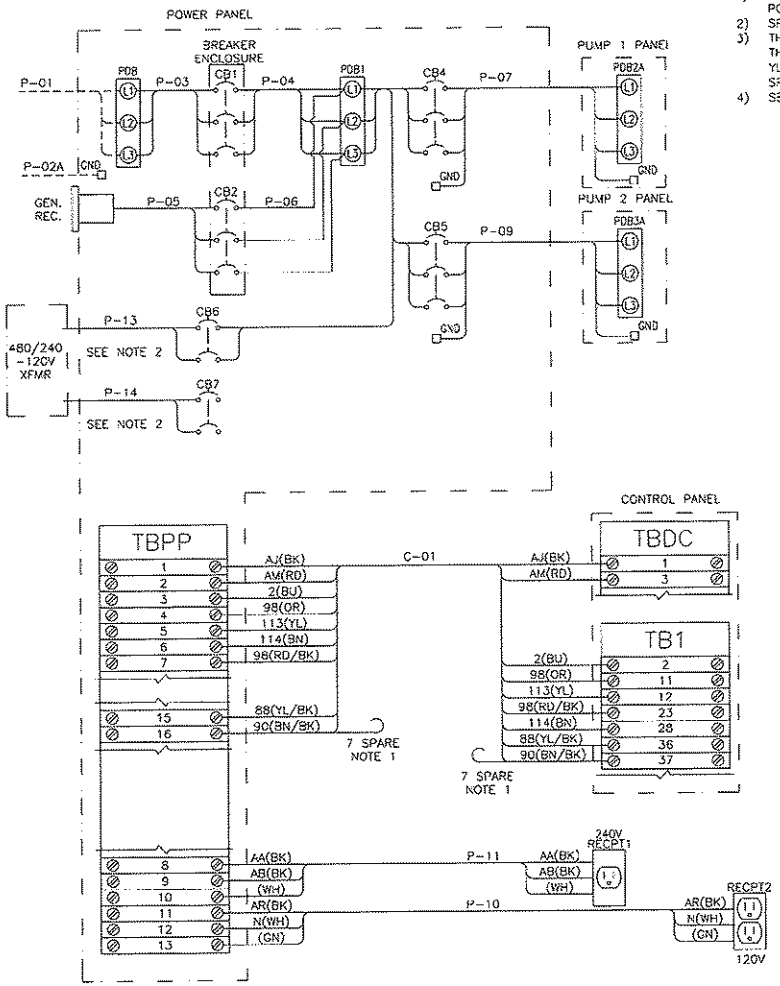

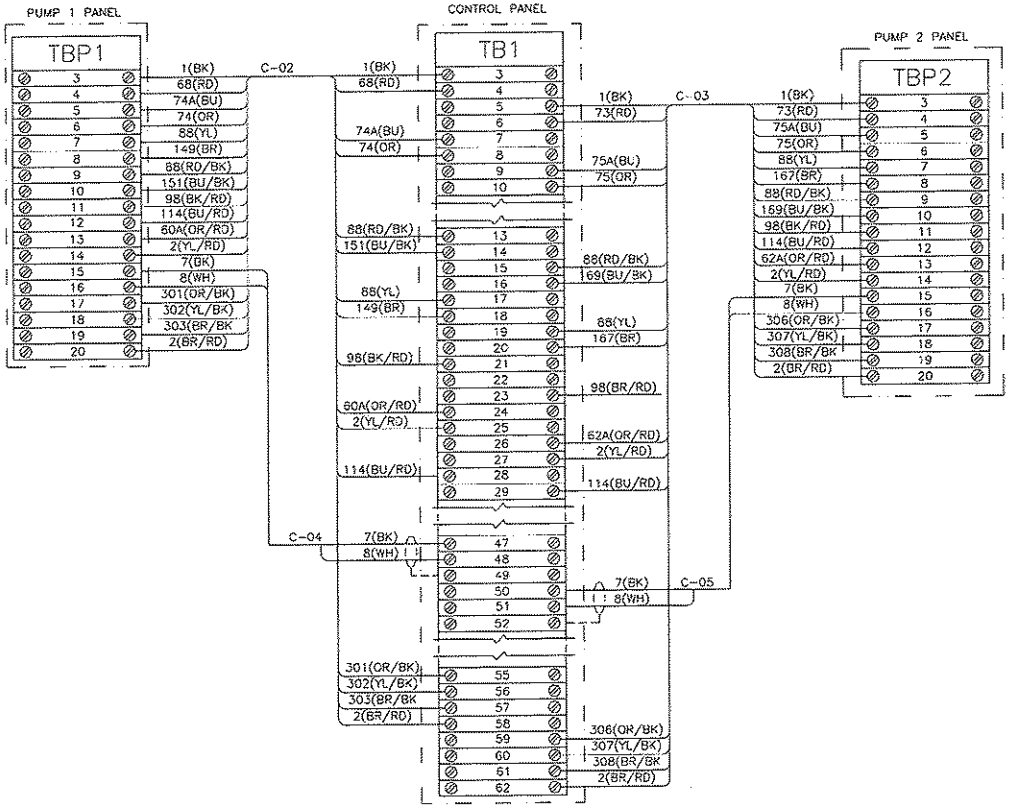

REVISIONS	BY

IMPROVEMENTS TO WASTEWATER COLLECTION SYSTEM

LIFT STATION CONSTRUCTION DETAILS

ELECTRICAL STANDARDS

FINAL SUBMITTAL

EMERALD COAST UTILITIES AUTHORITY

APPROVED BY:

Drawn:	
Designed:	
Checked:	
Date:	MAY '13
Scale:	
Project No:	
Sheet No.	13
	OF 18 Sheets

ALL WORK SHALL BE CONSTRUCTED IN ACCORDANCE WITH THE LATEST EDITION OF THE E.C.U.A. STANDARD SPECIFICATIONS

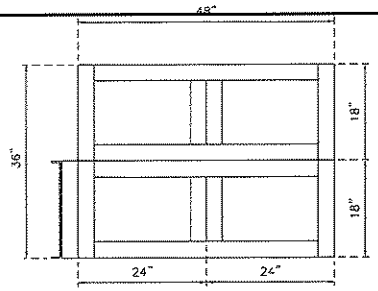

TOP VIEW

NOTES:

1. TOP AND BOTTOM OF BASE TO BE LEFT OPEN.
2. DRILL TOP OF BASE TO ATTACH ENCLOSURES AS REQUIRED.
3. DRILL BOTTOM OF BASE TO ATTACH TO SLAB AS REQUIRED.

ATTENTION

THIS LAYOUT IS ONE OF TWO (2) POSSIBLE CHOICES - SEE SHEET 14 FOR THE OTHER OPTION. IF THIS LAYOUT OPTION IS SELECTED, SEE SHEET 7A FOR ASSOCIATED PANEL LAYOUT DETAILS.

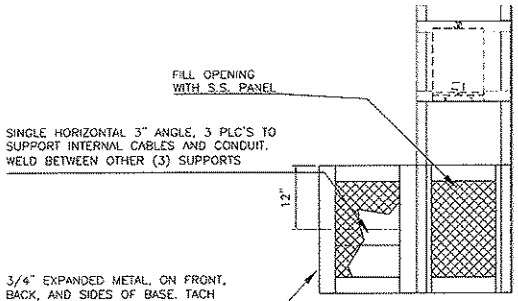

END VIEW

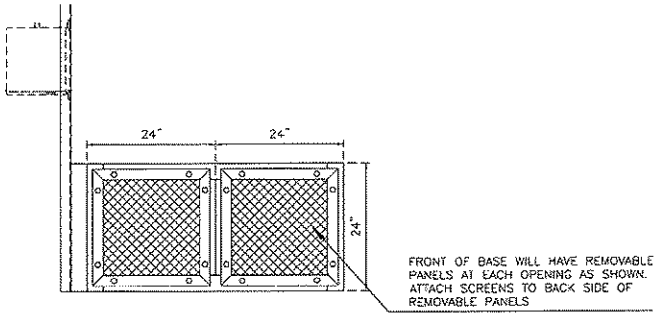

FRONT VIEW

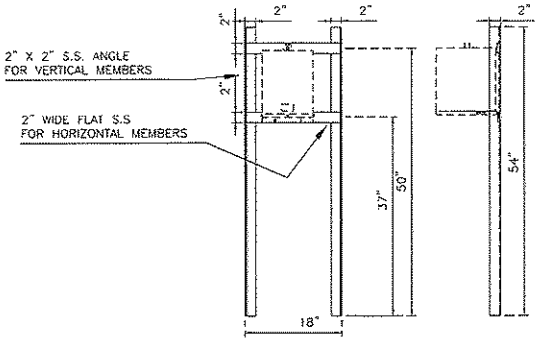

RACK DETAILS

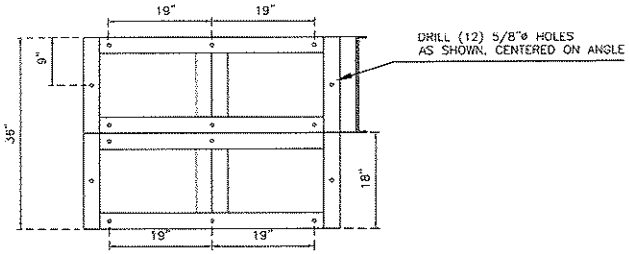

BOTTOM VIEW

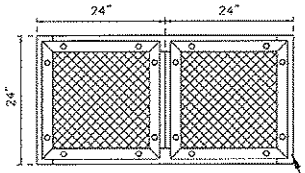

BACK VIEW

REVISIONS	BY

IMPROVEMENTS TO WASTEWATER COLLECTION SYSTEM

LIFT STATION CONSTRUCTION DETAILS

ELECTRICAL STANDARDS

FINAL SUBMITTAL

EMERALD COAST UTILITIES AUTHORITY

APPROVED BY:

Drawn:	
Designed:	
Checked:	
Date:	MAY '13
Scale:	
Project No:	
Sheet No.	14A
	OF 18 Sheets

ALL WORK SHALL BE CONSTRUCTED IN ACCORDANCE WITH THE LATEST EDITION OF THE E.C.U.A. STANDARD SPECIFICATIONS

REVISIONS	BY

IMPROVEMENTS TO WASTEWATER COLLECTION SYSTEM

LIFT STATION CONSTRUCTION DETAILS

ELECTRICAL STANDARDS

FINAL SUBMITTAL

Power Panel Fuse Schedule

Fuse	Type	Voltage	Amps	Description
F1	KTK-R-1	600	1A	Phase Monitor A Phase
F2	KTK-R-1	600	1A	Phase Monitor B Phase
F3	KTK-R-1	600	1A	Phase Monitor C Phase
F10	AGC-3	250	3A	Power Supply 1 Primary
F11	AGC-3	250	3A	Power Supply 2 Primary

Pump 1 Panel Fuse Schedule

Fuse	Type	Voltage	Amps	Description
F4	FNQ-R-1/4	600	1/4A	Pump 1 CPT Phase A
F5	FNQ-R-1/4	600	1/4A	Pump 1 CPT Phase C
F6	FNQ-1/2	500	1/2A	Pump 1 CPT Secondary

Pump 2 Panel Fuse Schedule

Fuse	Type	Voltage	Amps	Description
F7	FNQ-R-1/4	600	1/4A	Pump 2 CPT Phase A
F8	FNQ-R-1/4	600	1/4A	Pump 2 CPT Phase C
F9	FNQ-1/2	500	1/2A	Pump 2 CPT Secondary

Control Panel Fuse Schedule

Fuse	Type	Voltage	Amps	Description
F12	AGC-10	250	10A	Power Supply 1 Secondary
F13	AGC-10	250	10A	Power Supply 2 Secondary
F14	AGC-10	250	10A	Control Power
F15	AGC-10	250	10A	Batteries
F16	AGC-2	250	2A	Radio Power Supply Primary
F17	AGC-2	250	2A	Radio Power Supply Secondary
F18	AGC-1/4	250	1/4A	Pump 1 Motor Thermal
F19	AGC-1/4	250	1/4A	Pump 2 Motor Thermal
F20	AGC-1/10	250	1/10A	Operator Interface
F21	AGC-1	250	1A	Digital Inputs 0.0-1.4
F22	AGC-1	250	1A	Digital Inputs 1.5-2.7
F23	AGC-2	250	2A	Digital Outputs 0.0-0.7
F24	AGC-2	250	2A	Digital Outputs 1.0-1.7
F25	AGC-1-1/2	250	1-1/2A	PLC Power
F26	AGC-3/4	250	3/4A	Process Transmitter Supply
F27	AGC-1/10	250	1/10A	Analog Inputs
F28	AGC-1/10	250	1/10A	Analog Outputs
F29	GMA-1/4	250	1/4A	Analog Input 2
F30	GMA-1/4	250	1/4A	Analog Input 3
F31	GMA-1/4	250	1/4A	Analog Input 4

HMI BUTTON LEGEND

F1	FAULT RESET/ENABLE INTRUSION
SHIFT+F1	DISABLE INTRUSION
F2	ALTERNATE PUMP ASSIGNMENTS
F3	RESET PUMP 1 RUNTIME
SHIFT+F3	RESET PUMP 2 RUNTIME
F4	ALARMS SCREEN
F5	OVERVIEW SCREEN
F6	PUMP 1 SCREEN
F7	PUMP 2 SCREEN
F8	SETPOINTS SCREEN

CONTROL PANEL EXTERIOR TAG INFORMATION

WARNING

TO PREVENT IGNITION OF FLAMMABLE OR COMBUSTIBLE ATMOSPHERES DISCONNECT POWER BEFORE SERVICING

PROVIDES INTRINSICALLY SAFE CIRCUITS FOR USE IN CLASS I, GROUPS A, B, C, AND D WITH CONTROL DRAWING ON MAIN NAMEPLATE LABEL

CONTROL PANEL EXTERIOR TAG INFORMATION

WARNING

SUBSTITUTION OF COMPONENTS MAY IMPAIR INTRINSIC SAFETY

CONTROL PANEL DEVICE TAG INFORMATION

SECURELY FASTEN ALL INNER DOOR LATCHES BEFORE CLOSING OUTER DOOR. FAILURE TO FOLLOW THESE INSTRUCTIONS COULD CAUSE THE OUTER DOOR TO JAM WHEN RE-OPENED

Nameplate Data

Total Load (FLA)	16	18	21	27	33	39	53
Motor Hp	1	2	3	5	7.5	10	15
Motor FLA	2.1	3.4	4.8	7.6	11	14	21

Torque Rating Table

Component	Horsepower 1	2	3	5	7.5	10	15
Incoming Distribution Block (PDB1)	35lb-in/4.0N-m	35lb-in/4.0N-m	35lb-in/4.0N-m	35lb-in/4.0N-m	40lb-in/4.5N-m	40lb-in/4.5N-m	120lb-in/13.5N-m
Main Ground Block	20lb-in/2.2N-m	20lb-in/2.2N-m	20lb-in/2.2N-m	20lb-in/2.2N-m	20lb-in/2.2N-m	20lb-in/2.2N-m	25lb-in/2.8N-m
Motor Distribution Block (PDB2 & 3)	35lb-in/4.0N-m	35lb-in/4.0N-m	35lb-in/4.0N-m	35lb-in/4.0N-m	35lb-in/4.0N-m	35lb-in/4.0N-m	35lb-in/4.0N-m
Motor Ground Block	35lb-in/4.0N-m	35lb-in/4.0N-m	35lb-in/4.0N-m	35lb-in/4.0N-m	35lb-in/4.0N-m	35lb-in/4.0N-m	35lb-in/4.0N-m

EMERALD COAST UTILITIES AUTHORITY

APPROVED BY:

Drawn:
Designed:
Checked:
Date: MAY '13
Scale:
Project No:
Sheet No. 15
Of 18 Sheets

ALL WORK SHALL BE CONSTRUCTED IN ACCORDANCE WITH THE LATEST EDITION OF THE E.C.U.A. STANDARD SPECIFICATIONS

REVISIONS	BY

HAZARDOUS (CLASSIFIED) LOCATION

CLASS I, ZONE 0 OR 1, GROUPS IIC, IIB, IIA or
CLASS I, DIVISION 1, GROUPS A,B,C,D
CLASS II, DIVISION 1, GROUPS E,F,G
CLASS III, DIVISION 1

NON-HAZARDOUS LOCATION

CLASS I, ZONE 2, GROUPS IIC, IIB, IIA or
CLASS I, DIVISION 2, GROUPS A,B,C,D

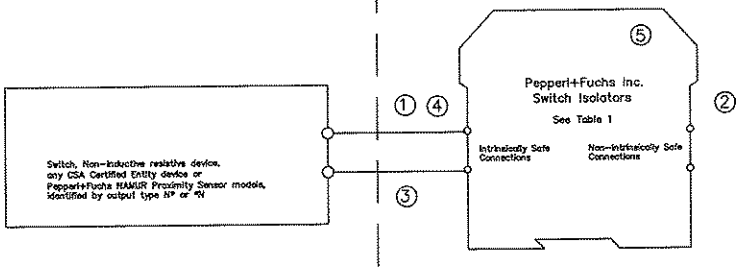

Notes:

① The intrinsically safe wiring must be installed in accordance with the Canadian Electrical Code CSA C22.1, Part 1, Appendix F.

② Barriers listed in Table 1 shall not be connected to any device that uses or generates in excess of 250Vrms or DC unless it has been determined that the voltage is adequately isolated from the barrier. Barriers listed in Table 2 shall not be connected to any device that uses or generates in excess of 60Vrms or DC unless the voltage is limited by an adequate means.

③ Any combination of up to 10 channels of the barriers listed in Table 1 or Table 2 may be connected in parallel and connected to a switch in a hazardous location.

④ The Entity concept allows interconnection of intrinsically safe apparatus with associated apparatus not specifically examined in combination as a system when the approved values of Voc and Isc for the associated apparatus are less than or equal to Vmax and Imax for the intrinsically safe apparatus and the approved values of Ca and La for the associated apparatus are greater than Ci + Ccable and Li + Lcable, respectively, for the intrinsically safe apparatus.

⑤ The following models with part number greater than 100000 are approved for mounting in a Class I, Zone 2, Groups IIC,IIB,IIA or Class I, Division 2, Groups A,B,C,D hazardous (classified) location: KF**-SR2-EX1.W, KF**-SR2-EX1.W.LB, KF**-SR2-EX2.W, KFD2-SR2-EX2.2S, KFD2-ST2-EX1.*, KFD2-ST2-EX2.*, KFD2-SOT2-EX1.*, KFD2-SOT2-EX2.*.

WARNING: Substitution of components may impair intrinsic safety and/or suitability for use in Class I, Division 2, Groups A,B,C,D or Class I, Zone 2, Groups IIC,IIB,IIA.
ADVERTISSEMENT: La substitution de composants peut compromettre la sécurité intrinsèque.

No changes without prior permission
CSA

THIS DRAWING CONTAINS PROPRIETARY DATA. NO DISCLOSURE, REPRODUCTION, OR USE OF ANY PART MAY BE MADE EXCEPT BY WRITTEN PERMISSION.

Title Installation Drawing for CSA Certified Switch Isolators

Revisions				ECO No.	
2-20-2008					
In.	Date	Cons.	Resp.	Appr.	

Pepperl+Fuchs® Inc. Twinsburg, OH 44087-2202 | Repl.No. – | Draw. No. 116-0047j | Sh. 1 of 2

TABLE 1: Barriers Certified to CSA Standard C22.2 No. 157 (Um = 250 V)

Model Numbers	Terminals	SYSTEM		ENTITY								
		V_{max}(V)	Res. (Ω)	V_{oc} (V)	I_{sc}(mA)	C_a(uF) GRPS			L_a(mH) GRPS		
						A,B	C,E	D,F,G	A,B	C,E	D,F,G
KFD2-SOT-Ex1*,KFD2-SOT-Ex2* KFD2-SR-Ex1*,KFD2-SR-Ex2* KFD2-SRT-Ex1* KFD2-ST-Ex1*,KFD2-ST-Ex2* KFA5-SR2-Ex1*,KFA5_SR2-Ex2* KFA6-SR2-Ex1*,KFA6-SR2-Ex2* KFD2-SR2-Ex1*,KFD2-SR2-Ex2*	1-3, 2-3; 4-6, 5-6	12.6	650	12.9	19.8	1.273	3.820	10.18	84.88	298.7	744.4
KFA5-SOT2-Ex1*,KFA5-SOT2-Ex2* KFA6-SOT2-Ex1*,KFA6-SOT2-Ex2*	1-3, 2-3; 4-6, 5-6	10.5	811	10.5	13.0	2.66	7.9	21.3	192	671	1000

TABLE 2: Barriers Certified to CSA Standard E79-11 (Um = 60 V)

Model Numbers	Terminals	Load Parameters							
		U_o (V_{oc})	I_o (I_{sc})	C_o(uF) GRPS			L_o(mH) GRPS		
				IIC (A,B)	IIB (C,E)	IIA (D,F,G)	IIC (A,B)	IIB (C,E)	IIA (D,F,G)
KFD2-SOT2-Ex1*,KFD2-SOT2-Ex2* KFD2-ST2-Ex1*,KFD2-ST2-Ex2*	1-3, 2-3; 4-6, 5-6	10.5	13.0	2.66	7.9	21.3	192	671	1000

No changes without prior permission
CSA

THIS DRAWING CONTAINS PROPRIETARY DATA. NO DISCLOSURE, REPRODUCTION, OR USE OF ANY PART MAY BE MADE EXCEPT BY WRITTEN PERMISSION.

Title Installation Drawing for CSA Certified Switch Isolators

Revisions				ECO No.	
2-20-2008					
In.	Date	Cons.	Resp.	Appr.	

Pepperl+Fuchs® Inc. Twinsburg, OH 44087-2202 | Repl.No. – | Draw. No. 116-0047j | Sh. 2 of 2

IMPROVEMENTS TO WASTEWATER COLLECTION SYSTEM
LIFT STATION CONSTRUCTION DETAILS
ELECTRICAL STANDARDS
FINAL SUBMITTAL

EMERALD COAST UTILITIES AUTHORITY

APPROVED BY:

Drawn:
Designed:
Checked:
Date: MAY '13
Scale:
Project No:
Sheet No. 16
OF 18 Sheets

GENERAL ELECTRICAL NOTES

NEW WORK:

1. ENTIRE ELECTRICAL INSTALLATION SHALL BE IN ACCORDANCE WITH THE LATEST EDITION (UNLESS NOTED OTHERWISE) OF THE FOLLOWING CODES AND STANDARDS:
   1.1. NATIONAL ELECTRICAL CODE (NFPA 70).
   1.2. STANDARD FOR FIRE PROTECTION IN WASTEWATER TREATMENT AND COLLECTION FACILITIES (NFPA 820).
2. THE CONTRACTOR SHALL BE RESPONSIBLE FOR READING ALL PROJECT SPECIFICATIONS AND WILL BE RESPONSIBLE FOR MEETING ALL REQUIREMENTS OUTLINED IN THE SPECIFICATIONS.
3. CONTRACTOR SHALL COORDINATE ALL WORK WITH OTHER TRADES PRIOR TO ROUGH-IN AND INSTALLATION.
4. WORKING SPACE FOR ALL ELECTRICAL AND CONTROL EQUIPMENT OPERATING AT 600V VOLTS OR LESS TO GROUND AND LIKELY TO REQUIRE EXAMINATION, ADJUSTMENT, SERVICING, OR MAINTENANCE WHILE ENERGIZED SHALL COMPLY WITH NEC, ARTICLE 110.26.
5. THE ELECTRICAL DESIGN PROVIDES A NUMBER OF BRANCH CIRCUITS, AMPACITY AND OVERCURRENT PROTECTION FOR OTHER DIVISIONS DESIGN BASIS EQUIPMENT CONFORMING TO MANUFACTURER'S SPECIFICATIONS AVAILABLE AT TIME OF DESIGN. THE CONTRACTOR SHALL VERIFY ALL EQUIPMENT LOADS PRIOR TO ROUGH-IN. IF REQUIREMENTS OF EQUIPMENT ACTUALLY PROVIDED UNDER CONTRACT FOR CONSTRUCTION ARE DIFFERENT, CONTRACTOR SHALL MAKE ALL CHANGES NECESSARY WITHOUT INCREASE IN THE CONTRACT AMOUNT. SUCH CHANGES SHALL BE BASED UPON REQUIREMENTS, NAMEPLATE VALUES AND CODE REQUIREMENTS, WHICHEVER IS MORE STRINGENT, AND MAY INCLUDE, BUT ARE NOT LIMITED TO: SIZE OF CONDUCTORS, SIZE OF CONDUIT, QUANTITY OF CONDUCTORS AND CONDUITS, TYPE AND SIZE OF CIRCUIT BREAKER OR DISCONNECT, OVERLOADS, FULL-VOLTAGE STARTERS, REDUCED VOLTAGE SOFT STARTERS, VARIABLE FREQUENCY DRIVES, AND FUSE PROTECTION.
6. THE ELECTRICAL CONTRACTOR IS REQUIRED TO COORDINATE, PROVIDE, AND INSTALL A FULLY OPERATIONAL AND CODE COMPLIANT ELECTRICAL SYSTEM. THIS MAY INCLUDE THE ADDITION OF ELECTRICAL ITEMS NOT SHOWN ON THE ELECTRICAL PLANS, BUT REQUIRED FOR SYSTEM OPERATION.
7. CONTRACTOR SHALL COORDINATE INSTALLATION OF ELECTRICAL SERVICE WITH ELECTRICAL UTILITY COMPANY PROVIDING ELECTRICAL SERVICE TO FACILITY. CONTRACTOR SHALL PAY ALL FEES ASSESSED BY ELECTRICAL UTILITY COMPANY TO PROVIDE ELECTRICAL SERVICE TO FACILITY.
8. CONTRACTOR SHALL EXCAVATE AND CONDUCT DEMOLITION SO AS TO AVOID DAMAGE TO EXISTING UTILITIES AND OTHER UNDERGROUND OR CONCEALED ITEMS. IF EXISTING OR NEW ITEMS ARE DAMAGED, THE CONTRACTOR SHALL NOTIFY THE OWNER AT ONCE OF ALL DAMAGE AND SHALL REPAIR (OR REPLACE IF NECESSARY) TO THE ORIGINAL CONDITION TO THE SATISFACTION OF OWNER AND ENGINEER AT NO CHARGE IN THE CONTRACT AMOUNT.
9. THE CONTRACTOR SHALL BE RESPONSIBLE FOR PROVIDING DETAILED ELECTRICAL AND CONTROL EQUIPMENT LAYOUT DRAWINGS TO THE ENGINEER AND OWNER FOR APPROVAL PRIOR TO INSTALLATION.
10. ALL CONDUITS NOT LOCATED UNDER SLAB SHALL HAVE A MINIMUM BURIAL DEPTH OF 42", UNLESS NOTED OTHERWISE.
11. CONDUITS SHALL BE BURIED 42" (MINIMUM) BELOW GRADE WITH MARKER TAPE 6" ABOVE TOP OF CONDUIT, UNLESS NOTED OTHERWISE.
12. MINIMUM SIZE CONDUIT SHALL BE 1" (UNLESS NOTED OTHERWISE).
13. CONDUIT ROUTINGS AND DEVICE/EQUIPMENT LOCATIONS SHOWN ARE DIAGRAMMATIC ONLY. CONTRACTOR SHALL FIELD ROUTE AND LOCATE AS REQUIRED.
14. CONTRACTOR SHALL PROVIDE PULL BOXES IN POWER CIRCUIT CONDUIT AS REQUIRED TO LIMIT THE NUMBER OF BENDS TO A MAXIMUM OF 270° OR THREE 90° BENDS.
15. ALL WIRE SHALL BE COPPER.
16. ALL ELECTRICAL CIRCUITS SHALL INCLUDE A GREEN GROUNDING CONDUCTOR SIZED PER NEC.
17. CONDUCTORS SHALL BE TERMINATED ON TERMINAL BLOCKS.
18. THE CONTRACTOR SHALL TAG ALL POWER AND CONTROL SYSTEM CABLING AT ALL TERMINATION POINTS.
19. FINAL CONNECTION TO ALL EQUIPMENT IS SHOWN DIAGRAMMATIC. PROVIDE FINAL CONNECTION AS REQUIRED PER MANUFACTURER OF EQUIPMENT.
20. CONTRACTOR SHALL MAINTAIN A SET OF PRINTS AND MARK-UP DURING CONSTRUCTION TO REFLECT "AS-BUILT" CONDITIONS. PRINTS SHALL BE DELIVERED TO THE ENGINEER UPON COMPLETION OF THE PROJECT.
21. ALL HARDWARE SHALL BE STAINLESS STEEL.
22. ALUMINUM CONDUIT SHALL BE COATED WITH (2) WRAPS OF ANTI-CORROSION TAPE OR RUN THROUGH A SCHEDULE 80 PVC SLEEVE TO WHEN IN CONTACT WITH CONCRETE.
23. BARE COPPER SHALL BE COATED WITH (2) WRAPS OF ANTI-CORROSION TAPE OR RUN THROUGH A SCHEDULE 80 PVC SLEEVE TO WHEN IN CONTACT WITH CONCRETE.
24. ENGINEER OF RECORD SHALL BE RESPONSIBLE FOR FINAL SIZING OF ALL EQUIPMENT.

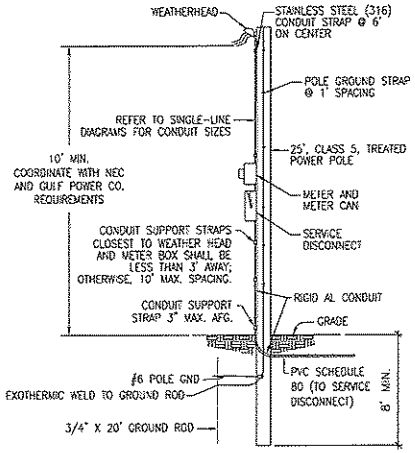

SERVICE LATERAL CONDUIT SHALL BE 3" (MIN) SCHEDULE 80 PVC BELOW GRADE AND 3" (MIN) RIGID AL CONDUIT ABOVE GRADE. ANY REQUIREMENTS BY THE UTILITY COMPANY SHALL PREVAIL OVER THE REQUIREMENTS OUTLINED HERE AND SHALL BE COORDINATED BY THE ELECTRICAL CONTRACTOR PRIOR TO INSTALLATION.

A3 UTILITY POLE DETAIL
NOT TO SCALE

ALL WORK SHALL BE CONSTRUCTED IN ACCORDANCE WITH THE LATEST EDITION OF THE E.C.U.A. STANDARD SPECIFICATIONS

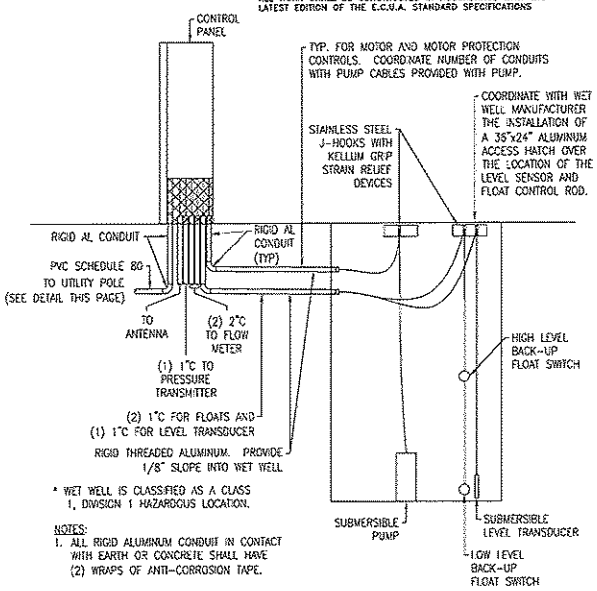

* WET WELL IS CLASSIFIED AS A CLASS 1, DIVISION 1 HAZARDOUS LOCATION.

NOTES:
1. ALL RIGID ALUMINUM CONDUIT IN CONTACT WITH EARTH OR CONCRETE SHALL HAVE (2) WRAPS OF ANTI-CORROSION TAPE.

B4 TYPICAL WET WELL SECTION DETAIL
NOT TO SCALE

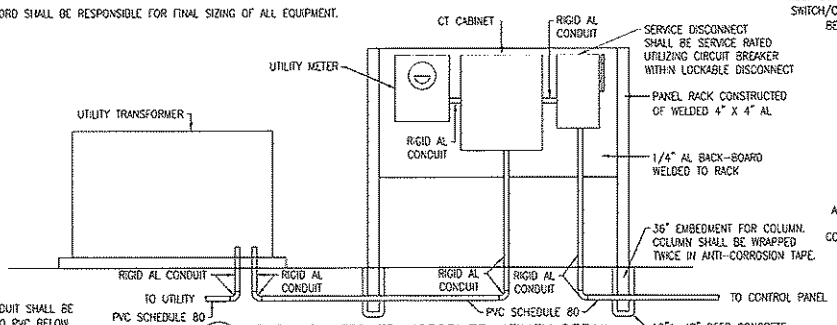

* SERVICE LATERAL CONDUIT SHALL BE 3" (MIN) SCHEDULE 80 PVC BELOW GRADE AND 3" (MIN) RIGID ALUMINUM CONDUIT ABOVE GRADE.

A1 PAD MOUNTED TRANSFORMER UTILITY DETAIL
NOT TO SCALE

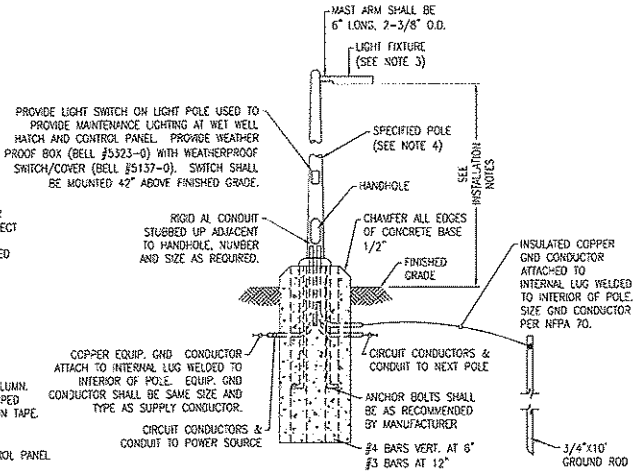

A4 LIGHT POLE INSTALLATION DETAIL
NOT TO SCALE

LIGHTING PERFORMANCE CRITERIA:
1. LIGHTING FIXTURE LAYOUT SHALL BE BASED UPON ACHIEVING 20 FOOT CANDLES (+/- 20%) AT THE FRONT OF THE CONTROL PANEL (WORK-PLANE OF 24" AFG) AND AT THE WET WELL ACCESS HATCH (WORKPLANE OF 0" AFG).
2. GENERAL SECURITY LIGHTING SHALL ENCOMPASS ACCESS GATE AND ALL PIPING/EQUIPMENT AT A MIN; AVERAGE 1 FOOT-CANDLE (+/- 20%, AT WORKPLANE OF 0" AFG).
3. REFER TO LIGHTING CONTROL DIAGRAM ON SHEET No. 18 FOR ADDITIONAL REQUIREMENTS.

LIGHT POLE INSTALLATION NOTES:
1. BURIAL AND DIAMETER DIMENSIONS INDICATED ARE FOR NOMINAL MINIMAL SIZES ONLY. FINAL DIMENSIONS SHALL BE DETERMINED BY A REGISTERED STRUCTURAL ENGINEER IN THE STATE OF FLORIDA. BASED UPON FIXTURES PROVIDED. PROVIDE SIGNED, DATED, AND SEALED PLANS FOR EACH INSTALLATION TYPE AND FIXTURE TYPE AS PART OF LIGHTING SUBMITTAL PACKAGE.
2. THE POLE AND FOUNDATION DESIGN SHALL BE BY A DELEGATED PROFESSIONAL ENGINEER TO MEET THE FOLLOWING CRITERIA:
   2.1. DESIGN WIND SPEED 160 MPH WITH A 1.3 GUST FACTOR. EXPOSURE CATEGORY C.
   2.2. SIZE EMBEDMENT FOR A MAXIMUM PERMANENT POLE DEFLECTION AFTER DESIGN WIND SPEED EVENT OF 1.00".
   2.3. ALUMINUM, ROUND OR SQUARE, TAPERED.
3. FIXTURE SHALL BE AMERICAN ELECTRIC LIGHTING ATB2 FIXTURE, 40 LED, 1000mA DRIVER, 120V, TYPE 4, WITH PHOTOCONTROL.
4. REFER TO SPECIFICATIONS SECTION 16521 "EXTERIOR LIGHTING" FOR ADDITIONAL REQUIREMENTS.
5. LIGHT FIXTURES SHALL BE MOUNTED AT 15'-0" (MAXIMUM) ABOVE FINISHED GRADE.

REVISIONS	BY

IMPROVEMENTS TO WASTEWATER COLLECTION SYSTEM
LIFT STATION CONSTRUCTION DETAILS
ELECTRICAL STANDARDS
FINAL SUBMITTAL

EMERALD COAST UTILITIES AUTHORITY

APPROVED BY:

Drawn:
Designed:
Checked:
Date: MAY '13
Scale:
Project No:
Sheet No. 17
Of 18 Sheets

ALL WORK SHALL BE CONSTRUCTED IN ACCORDANCE WITH THE LATEST EDITION OF THE E.C.U.A. STANDARD SPECIFICATIONS

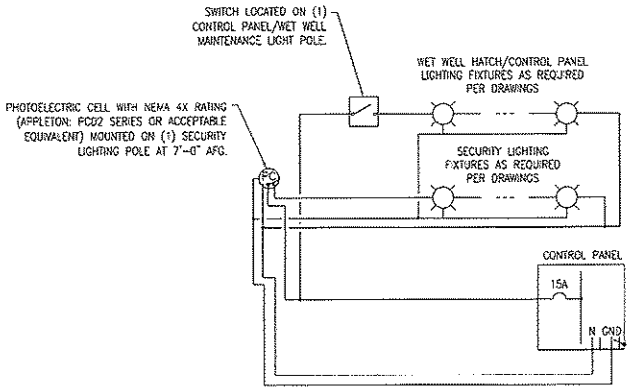

C2 TYPICAL LIGHTING CONTROL DIAGRAM
NOT TO SCALE

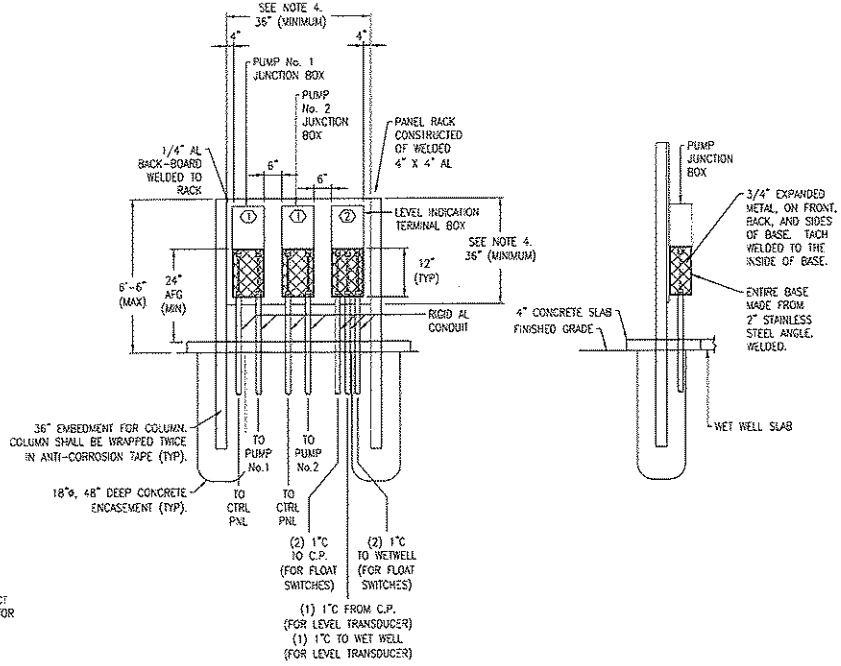

FRONT ELEVATION

SIDE ELEVATION

DETAIL NOTES:

1. THIS DETAIL SHALL ONLY APPLY WHEN THE CONTROL PANEL CANNOT BE PLACED WITHIN 6'-0" OF THE WET WELL TO ALLOW FOR CONNECTION OF STANDARD 50 FOOT PUMP CABLE CONNECTIONS.
2. BACKBOARD SHALL BE PLACED AT THE EDGE OF THE WET WELL SLAB BETWEEN THE WET WELL AND CONTROL PANEL.
3. JUNCTION BOXES SHALL BE MOUNTED SUCH THAT THEY ARE FACING THE WET WELL.
4. ENGINEER/CONTRACTOR SHALL SIZE JUNCTION BOXES AND BACKBOARDS BASED UPON INSTALLATION REQUIREMENTS PROVIDED AT TIME OF DESIGN.

KEY NOTES

1. REFER TO "TYPICAL PUMP JUNCTION BOX ELEVATION" (THIS SHEET) FOR ADDITIONAL REQUIREMENTS.
2. REFER TO "TYPICAL LEVEL INDICATION JUNCTION BOX ELEVATION" (THIS SHEET) FOR ADDITIONAL REQUIREMENTS.

A4 TYPICAL PUMP JUNCTION BOXES
NOT TO SCALE

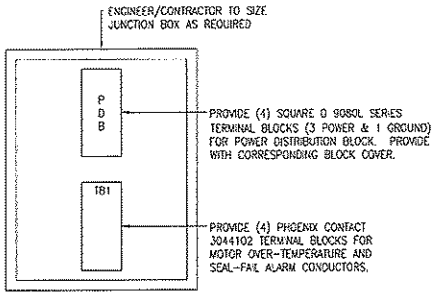

INTERIOR ELEVATION

DETAIL NOTES:

1. ALL TERMINAL BLOCKS SHALL BE PROVIDED WITH CORRESPONDING END BRACKETS AND END COVERS.
2. PROVIDE SEPARATE GROUND LUG IN EACH JUNCTION BOX, BONDED TO JUNCTION BOX.

A1 TYPICAL PUMP JUNCTION BOX ELEVATION
NOT TO SCALE

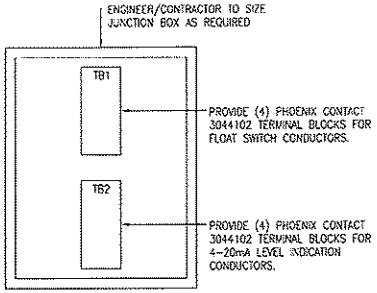

INTERIOR ELEVATION

DETAIL NOTES:

1. ALL TERMINAL BLOCKS SHALL BE PROVIDED WITH CORRESPONDING END BRACKETS AND END COVERS.
2. PROVIDE SEPARATE GROUND LUG IN EACH JUNCTION BOX, BONDED TO JUNCTION BOX.

A3 TYPICAL LEVEL INDICATION JUNCTION BOX ELEVATION
NOT TO SCALE

REVISIONS	BY

IMPROVEMENTS TO WASTEWATER COLLECTION SYSTEM

LIFT STATION CONSTRUCTION DETAILS

ELECTRICAL STANDARDS

FINAL SUBMITTAL

EMERALD COAST UTILITIES AUTHORITY

APPROVED BY:

Drawn:
Designed:
Checked:
Date: MAY '13
Scale:
Project No:
Sheet No. 18
OF 18 Sheets

ALL WORK SHALL BE CONSTRUCTED IN ACCORDANCE WITH THE LATEST EDITION OF THE E.C.U.A. STANDARD SPECIFICATIONS

480V 3Ø 1HP – 15HP FULL VOLTAGE STARTER ELECTRICAL STANDARD

FOR

EMERALD COAST UTILITY AUTHORITY ESCAMBIA COUNTY, FL

SHEET NO.	SHEET DESCRIPTION
1	MAIN POWER DISTRIBUTION SCHEMATIC
2	CONTROL SCHEMATIC
3	DIGITAL INPUTS SCHEMATIC
4	DIGITAL OUTPUTS & ANALOG INPUTS SCHEMATIC
5	ANALOG OUTPUTS & STARTER CONTROL SCHEMATIC
6	TERMINAL BLOCK LAYOUT AND FIELD CONNECTIONS
7	LINEAR EXTERIOR PANEL LAYOUT & FIELD CONDUIT REQUIREMENTS
8	POWER & PUMP 1 INTERNAL PANEL LAYOUTS
9	PUMP 2 & CONTROL PANEL INTERNAL LAYOUTS
10	EQUIPMENT LIST
11	HORSEPOWER RELATED EQUIPMENT & POWER CONDUCTORS
12	PANEL TO PANEL CONDUCTORS & EQUIPMENT
13	PANEL TO PANEL WIRING
14	LINEAR STAINLESS STEEL FRAME LAYOUT
15	TABLES, LEGENDS & TAGS
16	ISR INSTRUCTIONS
17	GENERAL NOTES AND DETAILS
18	GENERAL NOTES AND DETAILS

REVISIONS	BY

IMPROVEMENTS TO WASTEWATER COLLECTION SYSTEM

LIFT STATION CONSTRUCTION DETAILS

ELECTRICAL STANDARDS

FINAL SUBMITTAL

ECUA EMERALD COAST UTILITIES AUTHORITY

APPROVED BY:

Drawn:
Designed:
Checked:
Date: MAY '13
Scale:
Project No:
Sheet No. 0
OF 18 Sheets

VOLTS	PHASE	FREQ	FLA
480	3	60	XXX
LARGEST MOTOR			
VOLTS	PHASE	FREQ	FLA	HP
480	3	60	XXX	XX
SHORT CIRCUIT CURRENT: 10kA RMS SYMMETRICAL, 480VAC MAXIMUM			

*FOR NAMEPLATE DATA FOR EACH HORSEPOWER RATING SEE SHEET 15 'NAMEPLATE DATA' TABLE

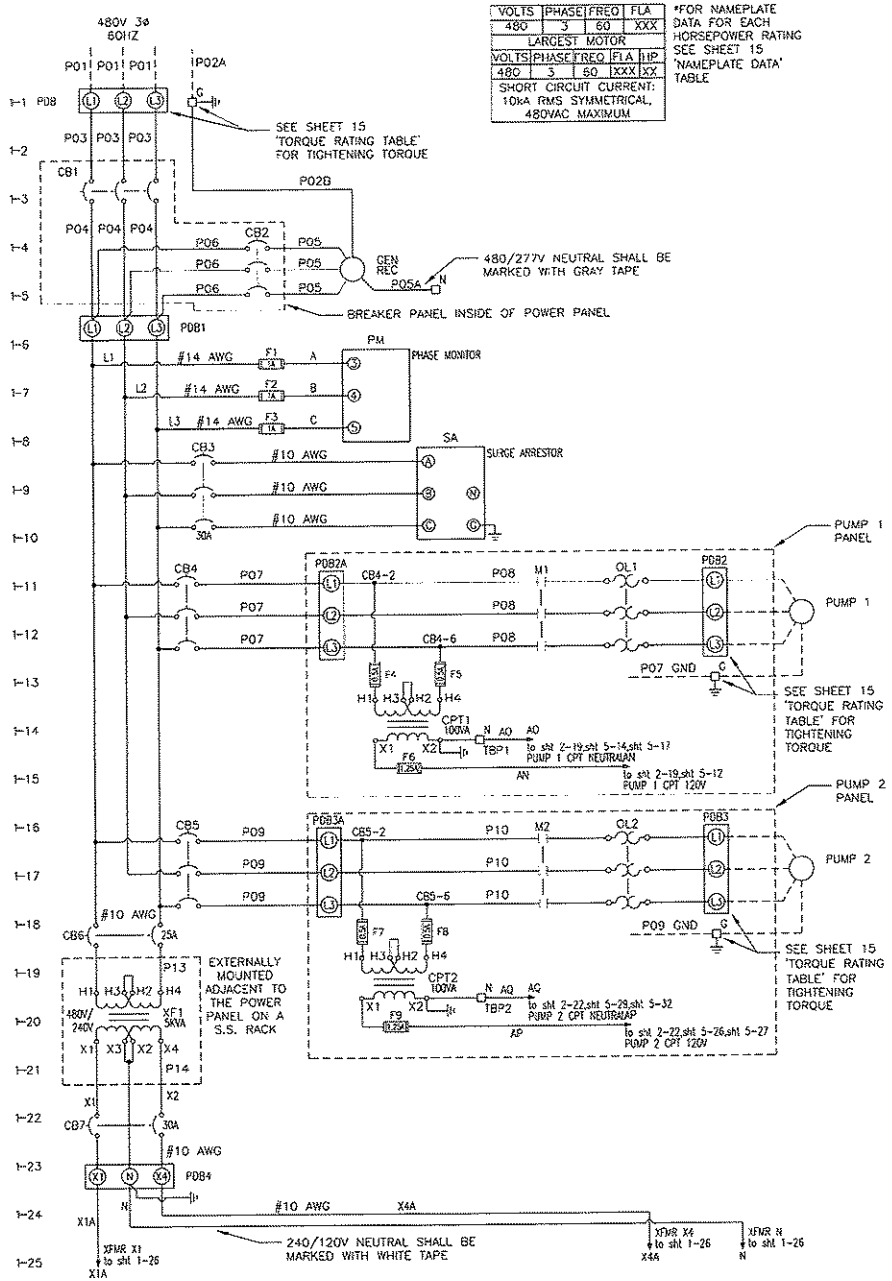

ALL WORK SHALL BE CONSTRUCTED IN ACCORDANCE WITH THE LATEST EDITION OF THE E.C.U.A. STANDARD SPECIFICATIONS

NOTES:

1. THE COMPLETED CONTROL PANEL SHALL BE LABELED AND MANUFACTURED TO MEET U.L. 508A AND 698A CERTIFICATION.
2. CONTROL PANEL WIRING SHALL BE STRANDED COPPER, MINIMUM SIZE #16 AWG WITH 600V 90DEGREE C TYPE THHN INSULATION.
3. CONTROL PANEL WIRING SHALL BE NUMBERED AT BOTH ENDS WITH TYPE WRITTEN, HEAT SHRINKABLE WIRE MARKERS.
4. ALL WIRING WITHIN THE CONTROL PANEL SHALL BE COLOR CODED OR CODED USING ELECTRICAL TAPE IN SIZES WHERE COLORED INSULATION IS NOT AVAILABLE. THE FOLLOWING CODING SHALL BE USED:
   - 4.1. UNGROUNDED AC CONDUCTORS AT SUPPLY VOLTAGE - BLACK
   - 4.2. GROUNDED AC CURRENT CARRYING CONDUCTORS - WHITE
   - 4.3. UNGROUNDED AC CONDUCTORS BELOW SUPPLY VOLTAGE - RED
   - 4.4. UNGROUNDED AC CONTROL CONDUCTORS & CONDUCTORS THAT REMAIN ENERGIZED WHEN THE MAIN DISCONNECT IS OFF - YELLOW
   - 4.5. UNGROUNDED DC CONTROL CONDUCTORS - ORANGE
   - 4.6. GROUNDED DC CURRENT CARRYING CONDUCTORS - BROWN
   - 4.7. INTRINSICALLY SAFE WIRING - BLUE
   - 4.8. GROUND CONDUCTORS - GREEN
5. SEE SHEETS 11 & 12 FOR DETAILS REGARDING ALL POWER CONDUCTORS LABELED PXX.
6. SEE SHEET 11 'HORSEPOWER RELATED COMPONENTS EQUIPMENT LIST' FOR RATINGS OF OVERCURRENT PROTECTION DEVICES.
7. SEE SHEET 6 FOR TERMINAL BLOCK DESIGNATION AND DESCRIPTIONS.

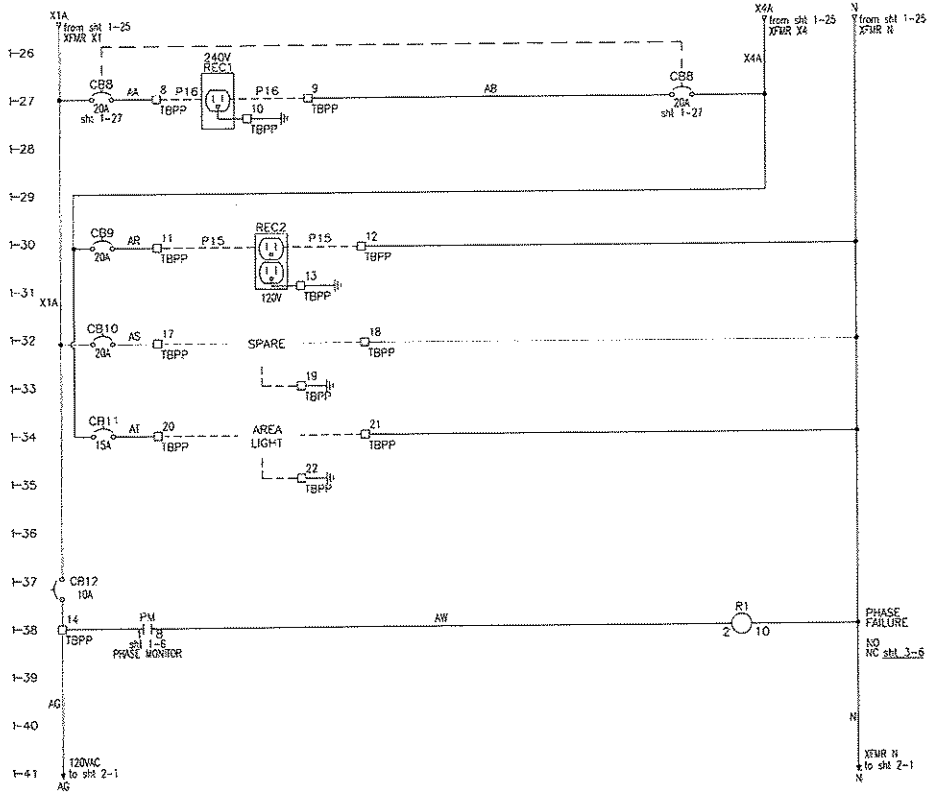

REVISIONS	BY

IMPROVEMENTS TO WASTEWATER COLLECTION SYSTEM

LIFT STATION CONSTRUCTION DETAILS

ELECTRICAL STANDARDS

FINAL SUBMITTAL

EMERALD COAST UTILITIES AUTHORITY

APPROVED BY:

Drawn:	
Designed:	
Checked:	
Date:	MAY '13
Scale:	
Project No:	
Sheet No.	1
	OF 18 Sheets

ALL WORK SHALL BE CONSTRUCTED IN ACCORDANCE WITH THE LATEST EDITION OF THE E.C.U.A. STANDARD SPECIFICATIONS

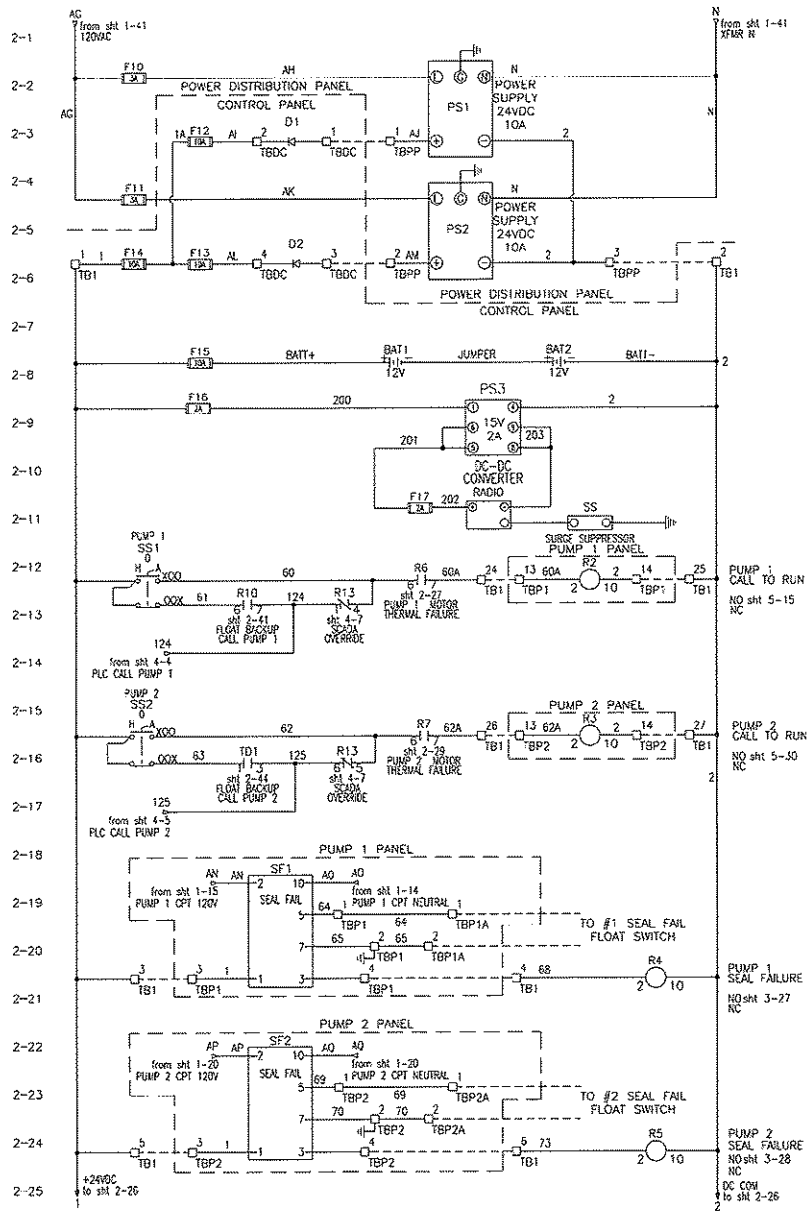

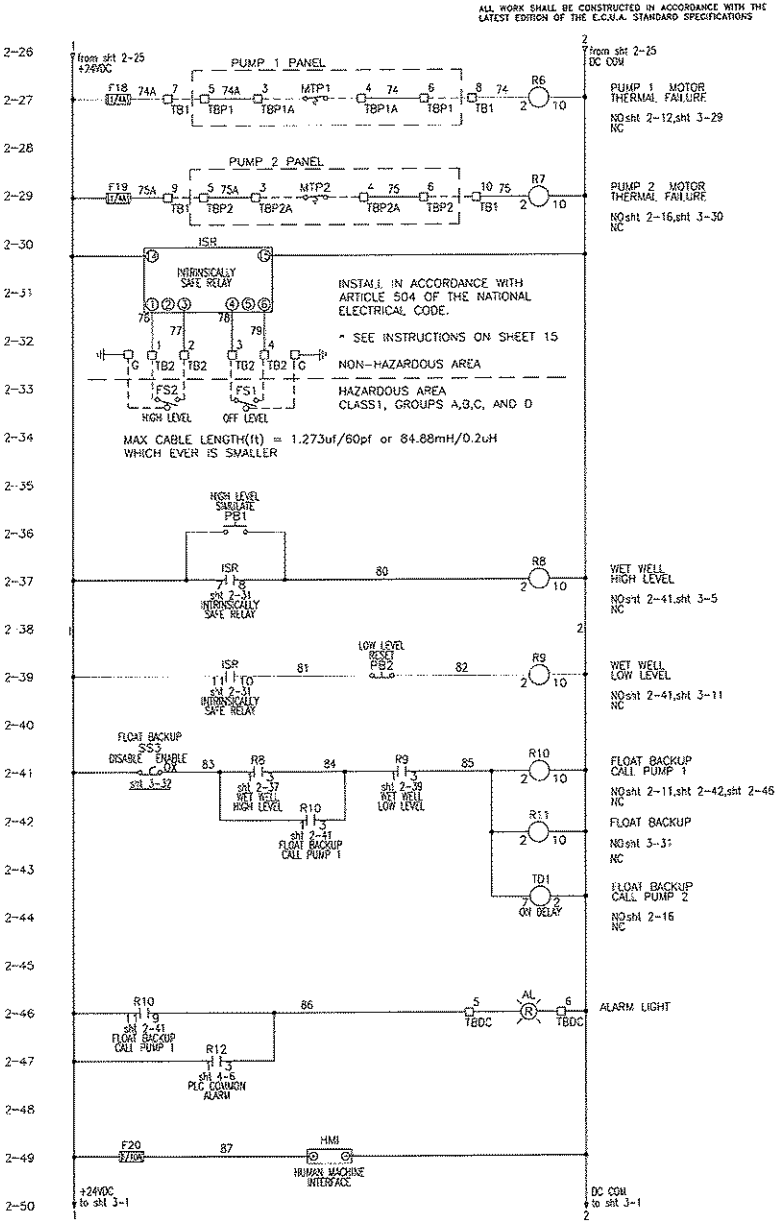

REVISIONS	BY

IMPROVEMENTS TO WASTEWATER COLLECTION SYSTEM

LIFT STATION CONSTRUCTION DETAILS

ELECTRICAL STANDARDS

FINAL SUBMITTAL

EMERALD COAST UTILITIES AUTHORITY

APPROVED BY:

Drawn:	
Designed:	
Checked:	
Date:	MAY '13
Scale:	
Project No:	
Sheet No.	2
OF 18 Sheets	

ALL WORK SHALL BE CONSTRUCTED IN ACCORDANCE WITH THE LATEST EDITION OF THE E.C.U.A. STANDARD SPECIFICATIONS

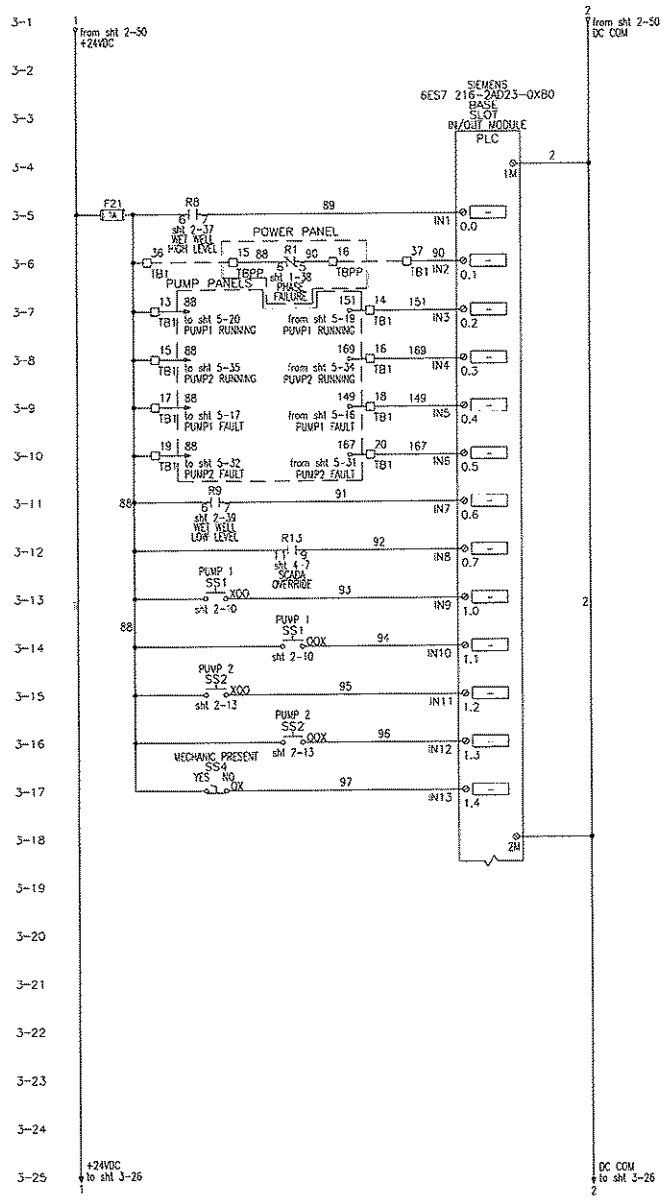

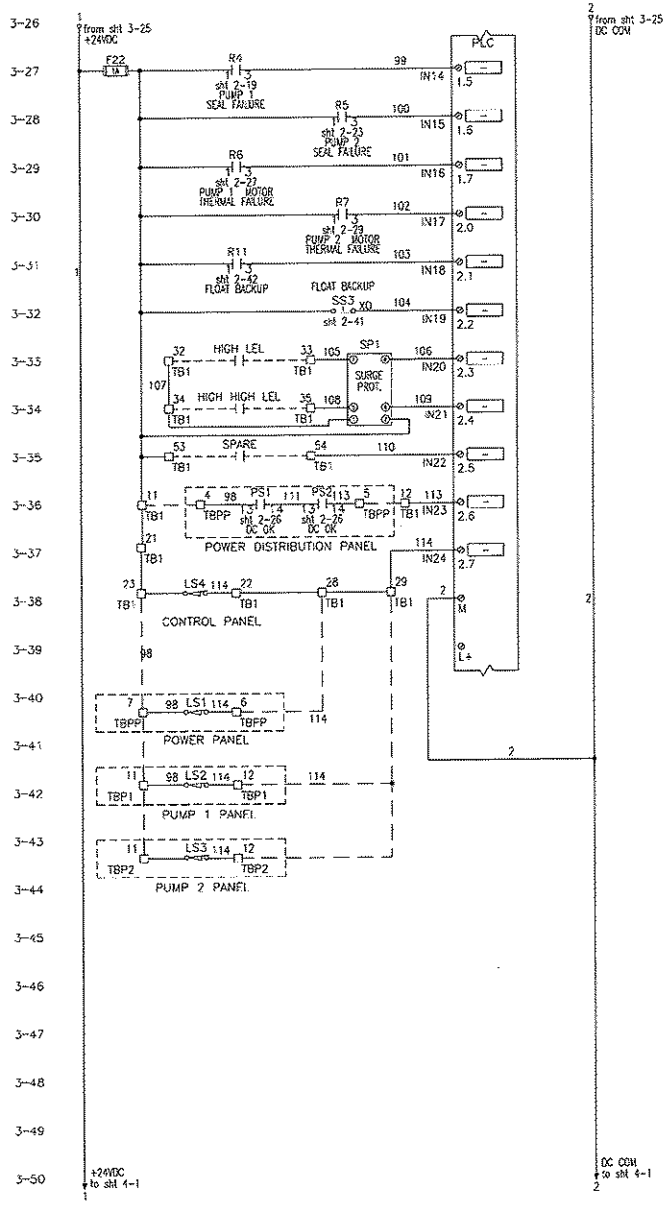

REVISIONS	BY

IMPROVEMENTS TO WASTEWATER COLLECTION SYSTEM

LIFT STATION CONSTRUCTION DETAILS

ELECTRICAL STANDARDS

FINAL SUBMITTAL

ECUA EMERALD COAST UTILITIES AUTHORITY

APPROVED BY:

Drawn:	
Designed:	
Checked:	
Date:	MAY '13
Scale:	
Project No:	
Sheet No.	3
	Of 18 Sheets

ALL WORK SHALL BE CONSTRUCTED IN ACCORDANCE WITH THE LATEST EDITION OF THE E.C.U.A. STANDARD SPECIFICATIONS

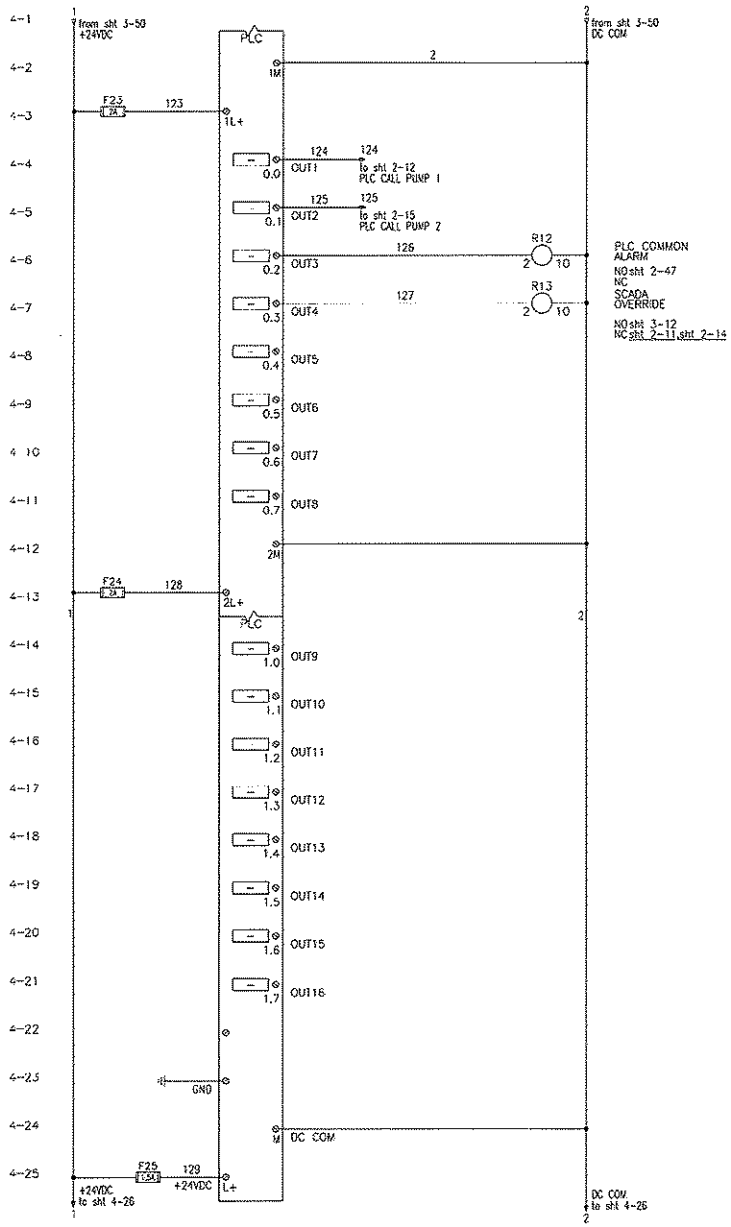

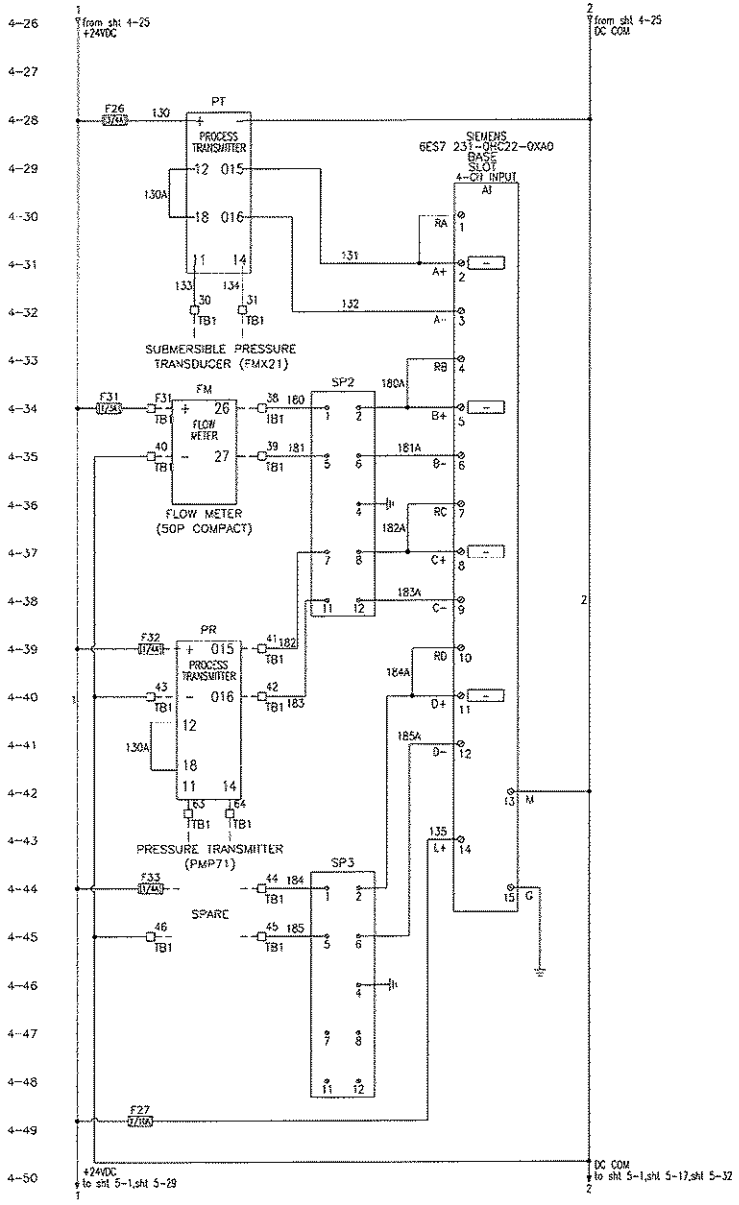

REVISIONS	BY

IMPROVEMENTS TO WASTEWATER COLLECTION SYSTEM

LIFT STATION CONSTRUCTION DETAILS

ELECTRICAL STANDARDS

FINAL SUBMITTAL

EMERALD COAST UTILITIES AUTHORITY

APPROVED BY:

Drawn:
Designed:
Checked:
Date: MAY '13
Scale:
Project No:
Sheet No: 4
Of 18 Sheets

ALL WORK SHALL BE CONSTRUCTED IN ACCORDANCE WITH THE LATEST EDITION OF THE E.C.U.A. STANDARD SPECIFICATIONS

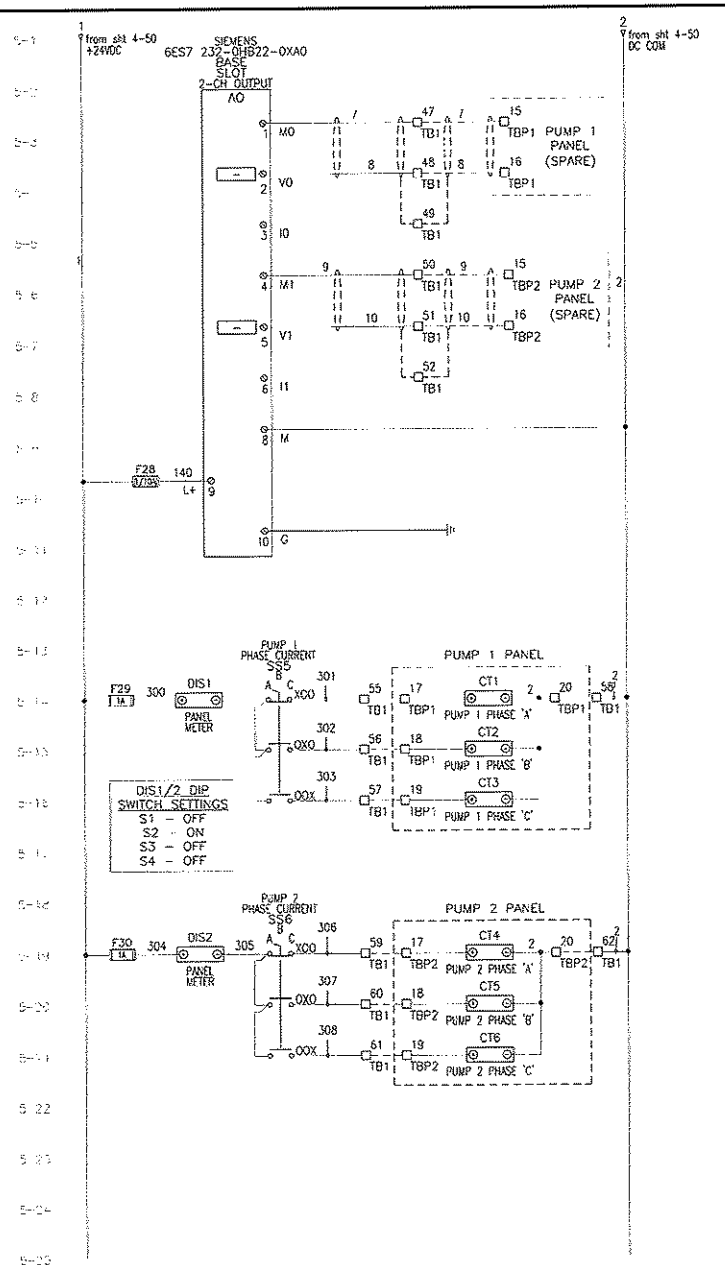

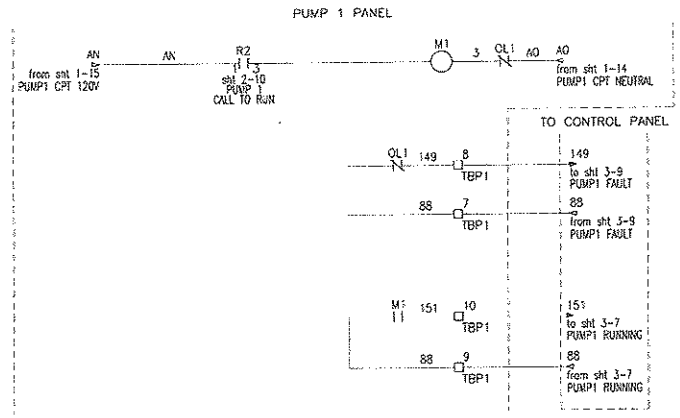

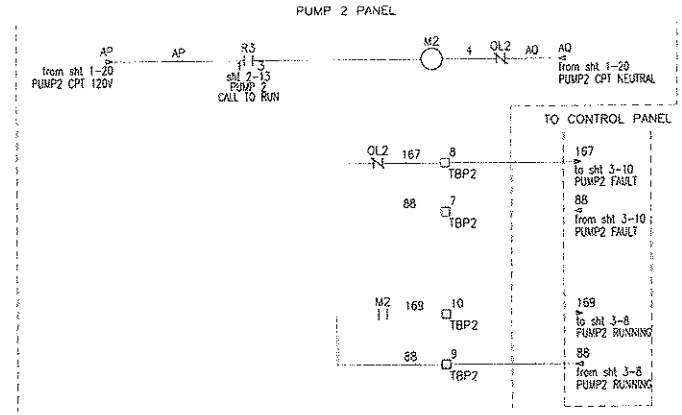

REVISIONS	BY

IMPROVEMENTS TO WASTEWATER COLLECTION SYSTEM

LIFT STATION CONSTRUCTION DETAILS

ELECTRICAL STANDARDS

FINAL SUBMITTAL

ECUA EMERALD COAST UTILITIES AUTHORITY

APPROVED BY:

Drawn:	
Designed:	
Checked:	
Date:	MAY '13
Scale:	
Project No:	
Sheet No.	5
	OF 18 Sheets

ALL WORK SHALL BE CONSTRUCTED IN ACCORDANCE WITH THE LATEST EDITION OF THE C.C.U.A. STANDARD SPECIFICATIONS

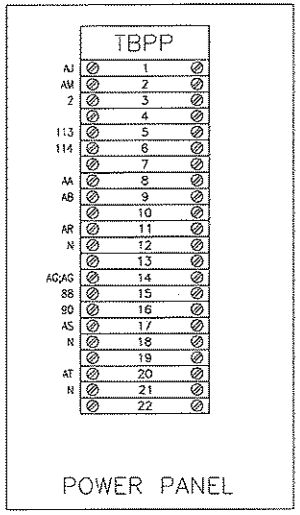

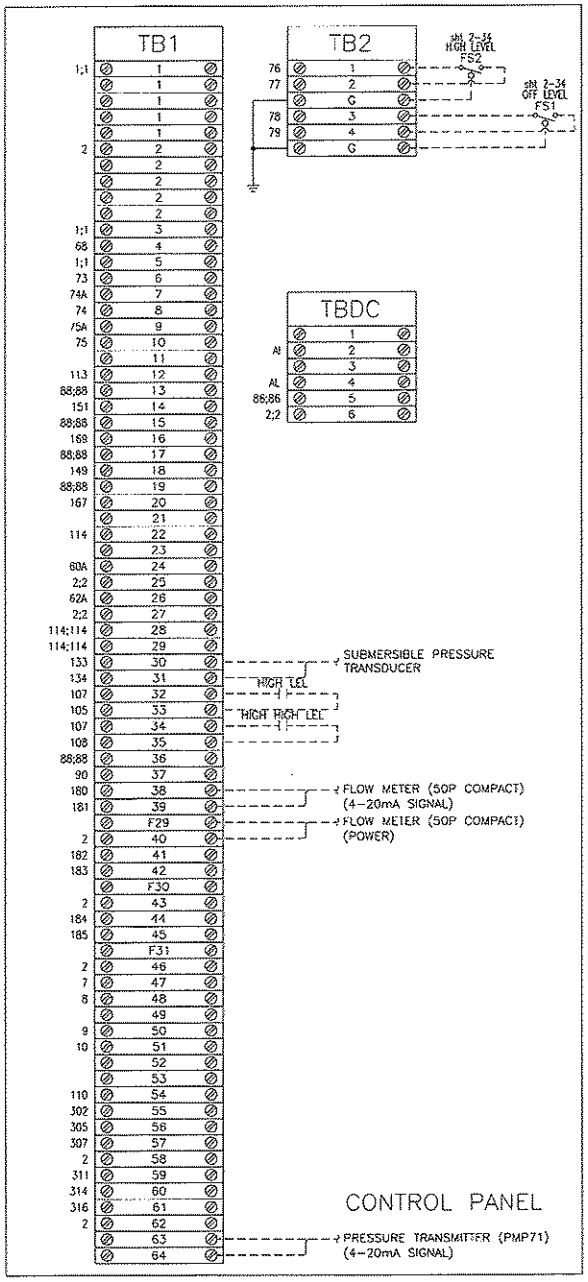

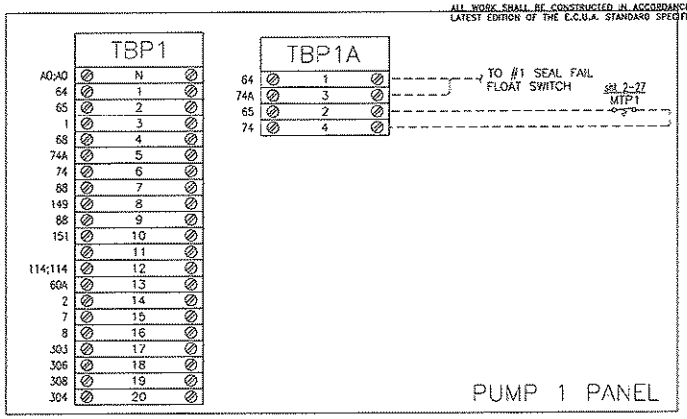

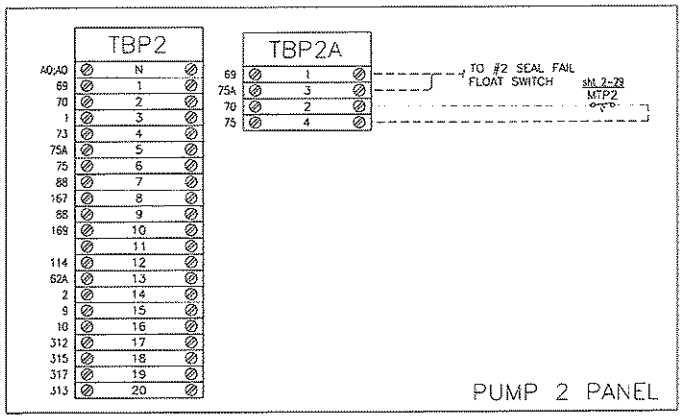

NOTES:

TERMINAL BLOCK DESIGNATIONS:

- TBPP – POWER PANEL TERMINAL BLOCK
- TB1 – CONTROL PANEL TERMINAL BLOCK
- TB2 – INTRINSICALLY SAFE TERMINAL BLOCK
- TBP1 – PUMP 1 TERMINAL BLOCK
- TBP1A – PUMP 1 TERMINAL BLOCK (MOTOR THERMAL AND SEAL FAILURE)
- TBP2 – PUMP 2 TERMINAL BLOCK
- TBP2A – PUMP 2 TERMINAL BLOCK (MOTOR THERMAL AND SEAL FAILURE)

TYPICAL FOR ALL TERMINAL BLOCKS ON THIS DRAWING

USE COPPER CONDUCTORS ONLY
75 DEG C (167 DEG F)
5.3-7.0 LB/IN TIGHTENING TORQUE

REVISIONS	BY

IMPROVEMENTS TO WASTEWATER COLLECTION SYSTEM

LIFT STATION CONSTRUCTION DETAILS

ELECTRICAL STANDARDS

FINAL SUBMITTAL

EMERALD COAST UTILITIES AUTHORITY

APPROVED BY:

Drawn:	
Designed:	
Checked:	
Date:	MAY '13
Scale:	
Project No:	
Sheet No.	6
	OF 18 Sheets

ALL WORK SHALL BE CONSTRUCTED IN ACCORDANCE WITH THE LATEST EDITION OF THE E.C.U.A. STANDARD SPECIFICATIONS

NOTES

1. SEE SHEET 15 FOR SCHEDULES, LEGENDS AND PANEL TAGS.

ATTENTION

THIS LAYOUT IS ONE OF TWO (2) POSSIBLE CHOICES – SEE SHEET 7A FOR THE OTHER OPTION. IF THIS LAYOUT OPTION IS SELECTED, SEE SHEET 14 FOR ASSOCIATED RACK DETAILS.

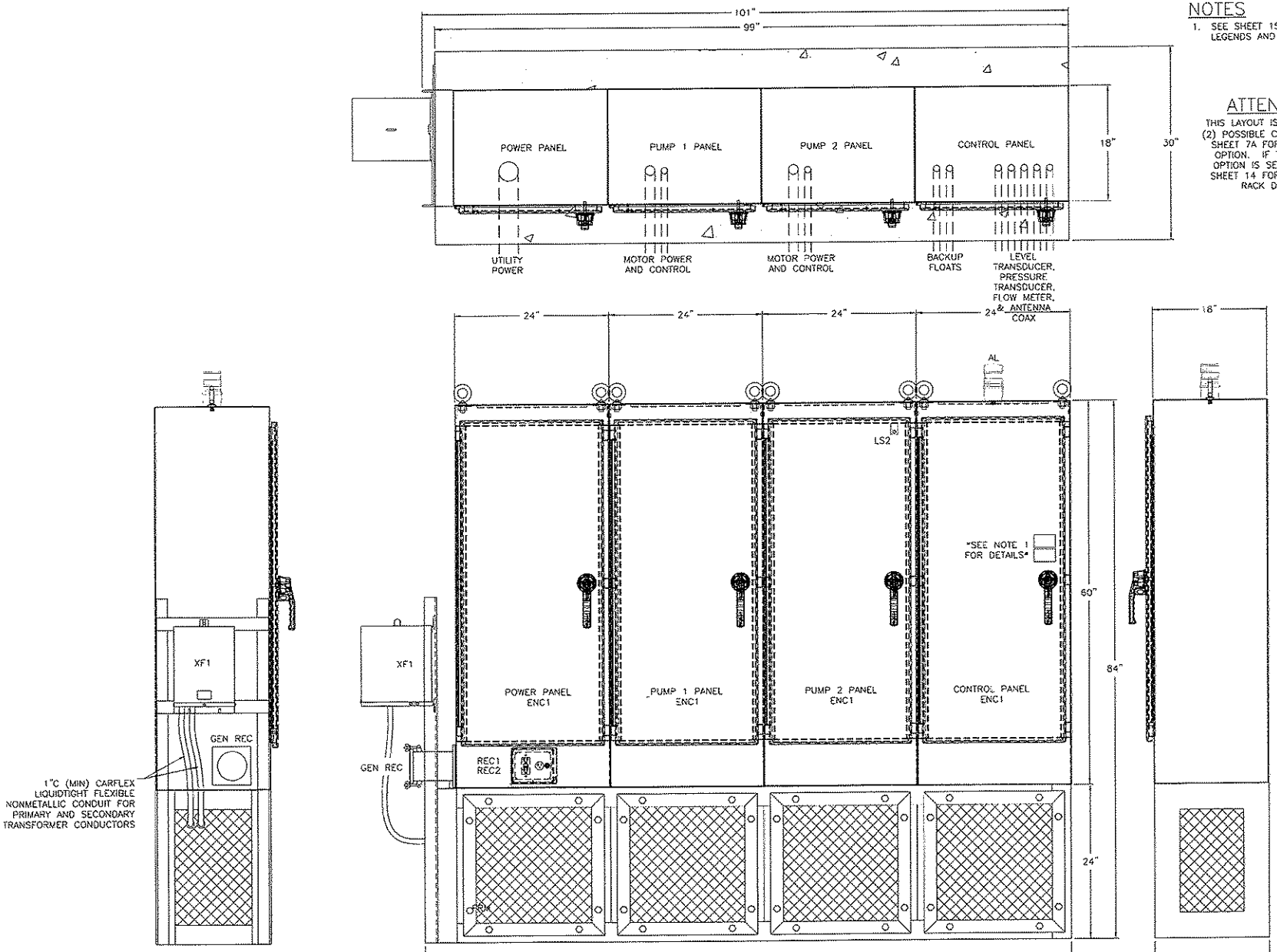

REVISIONS	BY

IMPROVEMENTS TO WASTEWATER COLLECTION SYSTEM

LIFT STATION CONSTRUCTION DETAILS

ELECTRICAL STANDARDS

FINAL SUBMITTAL

EMERALD COAST UTILITIES AUTHORITY

APPROVED BY:

Drawn:	
Designed:	
Checked:	
Date:	MAY '13
Scale:	
Project No:	
Sheet No.	7
	OF 18 Sheets

ALL WORK SHALL BE CONSTRUCTED IN ACCORDANCE WITH THE LATEST EDITION OF THE E.C.U.A. STANDARD SPECIFICATIONS

NOTES

1. SEE SHEET 15 FOR SCHEDULES, LEGENDS AND PANEL TAGS.
2. LAYOUT OF THE POWER & STARTER SECTIONS DEPICTS THE LARGEST POSSIBLE HORSEPOWER CONFIGURATION.

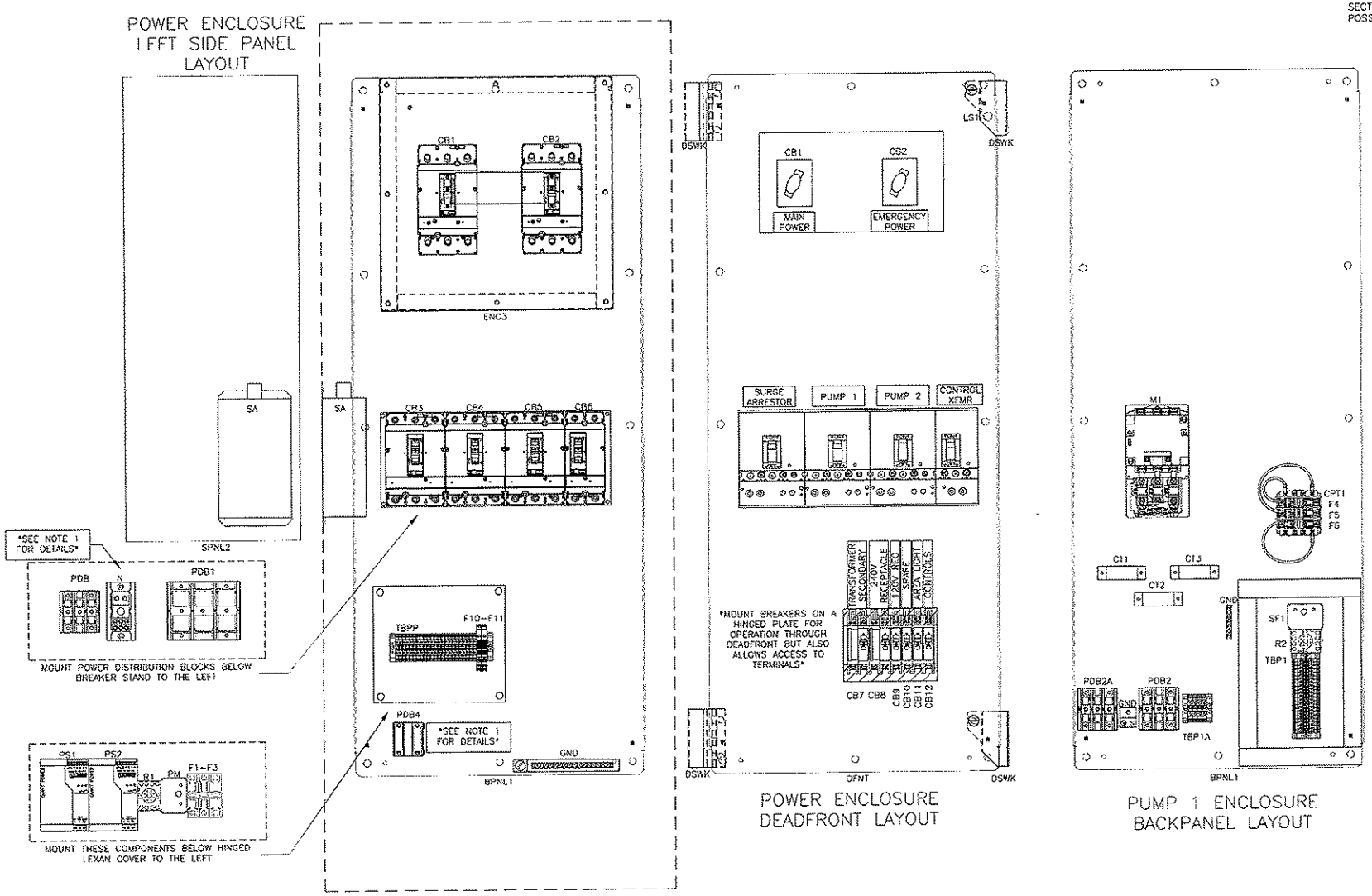

REVISIONS	BY

IMPROVEMENTS TO WASTEWATER COLLECTION SYSTEM

LIFT STATION CONSTRUCTION DETAILS

ELECTRICAL STANDARDS

FINAL SUBMITTAL

EMERALD COAST UTILITIES AUTHORITY

APPROVED BY:

Drawn:	
Designed:	
Checked:	
Date:	MAY '13
Scale:	
Project No:	
Sheet No.	8
	Of 18 Sheets

ALL WORK SHALL BE CONSTRUCTED IN ACCORDANCE WITH THE LATEST EDITION OF THE E.C.U.A. STANDARD SPECIFICATIONS

NOTES

1. SEE SHEET 15 FOR SCHEDULES, LEGENDS AND PANEL TAGS.
2. LAYOUT OF THE VFD SECTION DEPICTS THE LARGEST POSSIBLE HORSEPOWER CONFIGURATION.

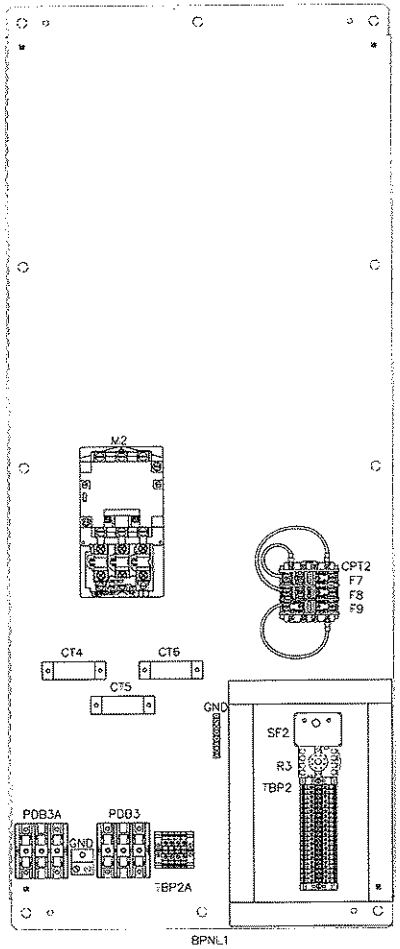

PUMP 2 ENCLOSURE BACKPANEL LAYOUT

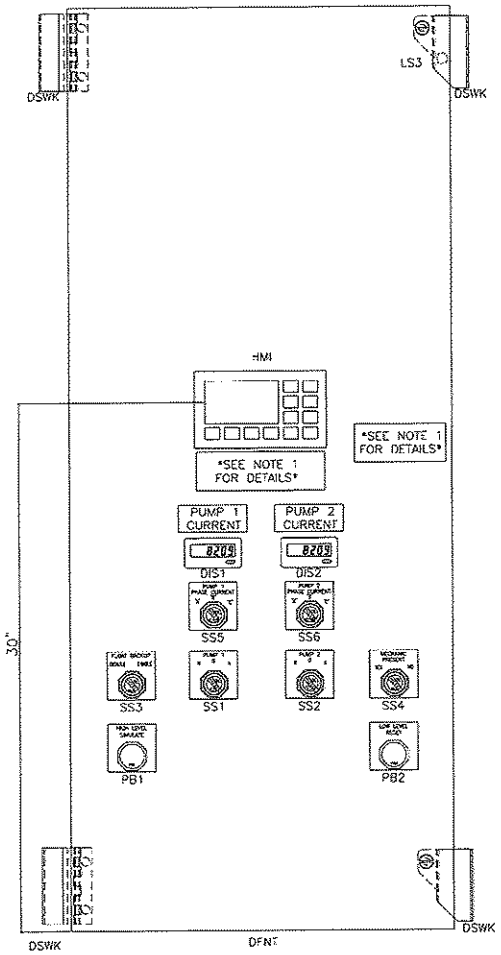

CONTROL PANEL DEADFRONT LAYOUT

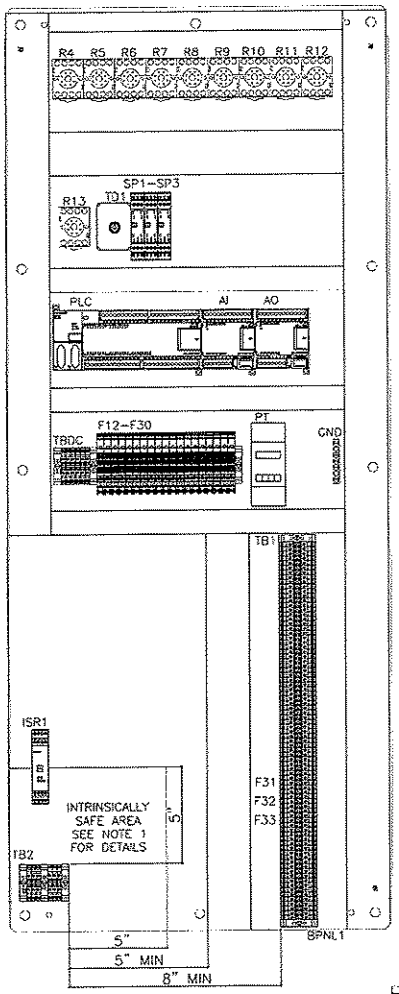

CONTROL ENCLOSURE BACKPANEL LAYOUT

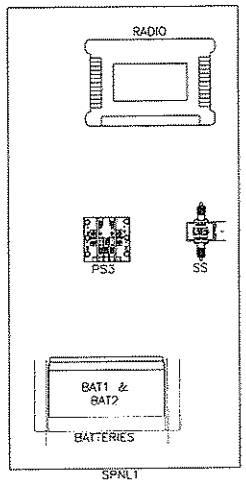

CONTROL ENCLOSURE RIGHT SIDEPANEL LAYOUT

REVISIONS	BY

IMPROVEMENTS TO WASTEWATER COLLECTION SYSTEM

LIFT STATION CONSTRUCTION DETAILS

ELECTRICAL STANDARDS

FINAL SUBMITTAL

ECUA EMERALD COAST UTILITIES AUTHORITY

APPROVED BY:

Drawn:	
Designed:	
Checked:	
Date:	MAY '13
Scale:	
Project No:	
Sheet No.	9
	OF 18 Sheets

480V FVNR Equipment List

Item	Tag	Panel	Description	Manufacturer	Model	Qty
1	ENC1	All	60X24X18 NEMA 4X SS Enclosure	Hoffman	A60Z2418SSFSN4	4
2	BPNL1	All	60x24 Painted Steel Backpanel	Hoffman	A60P2451	4
3	SPNL1	Control	28"H x 12"W Aluminum Sidepanel	EWS	Custom	1
4	DFNT	Power & Control	60x24 Aluminum Deadfront Panel	EWS	Custom	2
5	DSWK	Power & Control	Door Swing Kit	Hoffman	ANADFK	2
6	FRM	All	Expanded Metal Stainless Steel Frame	EWS	SEE DRAWINGS	1
7	PDB	Power	Incoming Power Distribution Block PDB	Square D	9080LBA362101	1
8	PDB	Power	Incoming Power Distribution Block PDB Cover	Square D	9080LB23	1
9	GND	Power	Power Panel Ground Bar	Square D	PK15GTA-L	1
10	ENC3	Power	16"H x 16"W x 8"D Screw Cover Type 3R Enclosure	Hoffman	A16168SC	1
11	CB1	Power	600V Main Circuit Breaker	Square D	SEE HP TABLE SHEET 11	1
12	CB2	Power	600V Emergency Circuit Breaker	Square D	SEE HP TABLE SHEET 11	1
13	CB1,CB2	Power	Mechanical Interlock for H/J Frame Circuit Breakers	Square D	529369	1
14	CB1,CB2	Power	Door Mounted Rotary Handle for H/J Frame Circuit Breakers	Square D	529338	2
15	GEN REC	Power	NEMA 4X Generator Receptacle	Appleton	ADR1044-RS	1
16	GEN REC	Power	NEMA 4X Generator Plug (Ship Loose)	Appleton	ACP1044CD-RS	1
17	PDB1	Power	Main Power Distribution Block PDB1	Square D	9080LBA363206	1
18	PDB1	Power	Main Power Distribution Block PDB1 Cover	Square D	9080LB33	1
19	F1-F3	Power	3 Pole Rejection type Fuse Block	Bussmann	BC6033PQ	1
20	F1-F3	Power	1A Rejection Type Fuse, Class CC	Bussmann	KTK-R-1	3
21	F1-F3	Power	Fuse Cover	Bussmann	SAMI-7N	3
22	PM	Power	480V Phase Monitor	Timemark	A257B	1
23	PM	Power	480V, 8-Pin Relay Base	ABB	OT08PC	1
24	CB3-CB6	Power	Breaker Stand	EWS	Custom	1
25	CB3	Power	30A 480V 3 Pole Circuit Breaker, Main Surge Arrestor	Square D	HDL36030	1
26	SA	Power	Main Surge Arrestor	SSI	SDLA3N4	1
27	CB4, CB5	Power	600V 3 Pole Circuit Breaker, Starter	Square D	SEE HP TABLE SHEET 11	2
28	CB4, CB5	Power	H & J Frame Circuit Breaker Locking System	Square D	529371	2
29	PDB2A, PDB3A	Pump 1 & 2	Starter Power Distribution Block	Square D	9080LBA362104	2
30	PDB2A, PDB3A	Pump 1 & 2	Starter Power Distribution Block Cover	Square D	9080LB23	2
31	M1, M2	Pump 1 & 2	NEMA Starter	Square D	SEE HP TABLE SHEET 11	2
32	OL1, OL2	Pump 1 & 2	Overload Heaters	Square D	SEE HP TABLE SHEET 11	2
33	OL1, OL2	Pump 1 & 2	Overload Contact, (2) N.C.	Square D	9999-SO5	2
34	GND	Pump 1 & 2	Motor Ground Lug	NSI	2-OT	2
35	PDB2, PDB3	Pump 1, 2 & Control	Motor Power Distribution Block PDB2&3, (1)#14-2/0.....(1)#14-2/0	Square D	9080LBA362101	2
36	PDB2, PDB3	Pump 1 & 2	Motor Power Distribution Block PDB2&3 Cover	Square D	9080LB23	2
37	F4, F5, F7, F8	Pump 1 & 2	1/2A Rejection Type Fuse, VFD CPT Primary	Bussmann	FNQ-R-1/2	4
38	CPT1, CPT2	Pump 1 & 2	480/120V 100VA Transformer	Square D	9070TF100D1	2
39	CPT1, CPT2	Pump 1 & 2	Transformer Finger Safe Cover, VFD CPT Primary	Square D	9070FSC-1	2
40	CPT1, CPT2	Pump 1 & 2	Fuse Puller, VFD CPT	Square D	9070FP-1	2
41	F6, F9	Pump 1 & 2	1-1/4A Fuse, VFD CPT Secondary	Bussmann	FNQ-1-1/4	2
42	CB6	Power	25A 480V 2 Pole Circuit Breaker, XF1 Transformer Primary	Square D	HDL26025	1
43	XF1	Power	5kVA 480V/240-120V Transformer, NEMA 3R Stainless Steel	Square D	SS1FSS	1
44	CB7-CB11	Power	Hinged Aluminum Bracked for Mounting 240/120V Circuit Breakers through Deadfront	EWS	Custom	1
45	CB7	Power	30A 240/120V 2 Pole Circuit Breaker, XF1 Transformer Secondary	Square D	QOU230	1
46	PDB4	Power	240V/120V Power Distribution Block PDB4, (1) #14-2 ... (4)-#18-10	Square D	9080LBA361104	1
47	CB8	Power	20A, 240V, 2 Pole Circuit Breaker	Square D	QOU220	1
48	REC1	Power	20A, 250V, 6-20R Receptacle	P&S	5872I	1
49	CB9, CB10	Power	20A, 120V 1 Pole Circuit Breaker	Square D	QOU120	2
50	REC2	Power	120V 20A GFCI Duplex Receptacle NEMA5-20R	P&S	2094-I	1
51	REC1, REC2	Power	Custom Receptacle Cover NEMA 4X S.S.	HOFFMAN	HIDRPSS-MOD	1
52	REC1, REC2	Power	3/4 IG AL FD BOX	Appelton	4C5-1/2	2
53	CB11	Power	15A, 120V, 1 Pole Circuit Breaker	Square D	QOU115	1
54	CB12	Power	10A, 120V, 1 Pole Circuit Breaker	Square D	QOU110	1
55	R1	Power	120V 3PDT General Purpose Relay w/ Indicator Lamp	Potter Brumfield	KRPA-14AN-120	1
56	R1-R13, SF1, SF2	All	11 Pin Relay Base	ABB	NDS-11	15
57	F10, F11	Power	Fused Terminal Block w/ 120V Blown Fuse Indication	Allen Bradley	1492-H4	2
58	-	Power & Control	1492-H4 &H5 Fused Terminal Block End Cover	Allen Bradley	1492-N37	2
59	F10, F11	Power	3A Fuse	Bussmann	AGC-3	2
60	PS1, PS2	Power	10A 24VDC Power Supply	Phoenix Contact	2938604	2
61	D1, D2	Power	10A Diode, P1000A	Newark	51R7094	2
62	-	Power	Custom Stand/Lexan Hinged Cover w/Alum Stand for TBPP & Power Supply Fuses	EWS	Custom	1
63	F12-F30	Control	Fused Terminal Block w/ 24VDC Blown Fuse Indication	Allen Bradley	1492-H5	19
64	F12-F15	Control	10A Fuse	Bussmann	AGC-10	4
65	BAT1, BAT2	Control	12VDC Battery	Power Sonic	PS1290	2

480V FVNR Equipment List

Item	Tag	Panel	Description	Manufacturer	Model	Qty
66	PS3	Control	24VDC-15VDC Converter, 2A	Vicor	V1-J12-EY-B1	1
67	RADIO	Control	400MHz Radio	GE MDS	SD04MD	1
68	RADIO	Control	DB9 Male/Male Gender Changer	Office Depot	946660	1
69	RADIO/SS	Control	3 Foot LMR400UF Coaxial Jumper NMale to TNCMale	Tessco	324503	1
70	SS	Control	Coaxial Surge Suppressor, 50-700MHz	Polyphaser	IS-50NX-C1	1
71	-	-	50FT Coaxial Cable, NMale-Nmale, Wireless Solutions 400-07-07-P50 (Ship Loose)	Tessco	370875	1
72	-	-	400MHz Yagi Antenna w/ N Female Connector, MAXRAD MYA4506N (Ship Loose)	Tessci	37634	1
73	-	-	Antenna Tower 5' Base Section, ROHN R-SB25GS (Ship Loose)	Tessco	64559	1
74	-	-	Antenna Tower 10' Mid Section, ROHN R-25G (Ship Loose)	Tessco	56866	1
75	-	-	Antenna Tower 9' Top Section, ROHN R-25AG2 (Ship Loose)	Tessco	70080	1
76	-	-	21' 1-1/4" S.S. Antenna Mast (Ship Loose)	Bell Steel	023008	1
77	F18, F19	Control	1/4A Fuse	Bussmann	AGC-1/4	2
78	F16, F17, F23, F24	Control	2A Fuse	Bussmann	AGC-2	4
79	SS1, SS2	Control	3 Position Selector Switch, 30MM	Square D	9001SKS43BH2	2
80	R2-R13	Control	24VDC 3PDT General Purpose Relay w/ Indicator Lamp	Potter Brumfield	KRPA-14DN-24	12
81	SF1, SF2	Control	120V Seal Failure Relay	ATC	SPM-120-AAA-10K	2
82	ISR1	Control	Intrinsically Safe Barrier Relay, 24VDC	Pepperl & Fuchs	KFD2-SR2-Ex2.W	1
83	TB2	Control	Terminal Block, Blue TB2	Phoenix Contact	3044115	4
84	TB2	Control	Terminal Block, Blue End Barrier, TB2	Phoenix Contact	3047235	1
85	TB2	Control	Ground Terminal Blocks, TB2	Phoenix Contact	3044128	2
86	PB1, PB2	Control	Push Button, Black 1NO 1NC	Square D	9001SKR18H13	2
87	SS3, SS4	Control	2 Position Selector Switch, 30MM	Square D	9001SKS11BH2	2
88	TD1	Control	24VDC 0-180 Second Time Delay Relay	Square D	RE4SATM12MW	1
89	TD1	Control	8 Pin Relay Base	ABB	NDS-8	1
90	AL	Control	24VDC Red Alarm Light	Federal Signal	LP3M-012-048R	1
91	F20, F27, F28	Control	1/10A Fuse	Bussmann	AGC-1/10	3
92	HMI	Control	TD400C Text Display	Siemens	6AV6 640-0AA00-0AX1	1
93	F21, F22, F29, F30	Control	1A Fuse	Bussmann	AGC-1	4
94	PLC	Control	S7-200 Dual Com Port Processor w/ 24 DI & 16 DO Points	Siemens	6ES7 216-2AD23-0XB0	1
95	AI	Control	S7-200 4 Point AI Module	Siemens	6ES7 231-0HC22-0XA0	1
96	AO	Control	S7-200 2 Point AO Module	Siemens	6ES7 232-0HB22-0XA0	1
97	PLC	Control	S7-200 Communication cable PC/PPI RS-232/485	Siemens	6ES7 901-3CB30-0XA0	1
98	SP1-SP3	Control	Plug In DI Surge Suppression, PT 4x1...DC	Phoenix Contact	2838322	3
99	SP1-SP3	Control	Terminal Block Base for Plugable Surge Supression, PT 4x1-BE	Phoenix Contact	2839363	3
100	LS1-LS4	Control	Panel Intrusion Switches, N.C. Contacts	NSI	76030PS	4
101	F25	Control	1-1/2A Fuse, PLC Supply	Bussmann	AGC-1-1/2	1
102	F26	Control	3/4A Fuse, Process Analyzer	Bussmann	AGC-3/4	1
103	PT	Control	Level Transmitter	Endress & Hauser	RMA42AAAH2	2
104	PT	-	Submersible Level Transducer, 20ft Range w/ 60ft Cable & Mounting Clamp (Ship Loose)	Endress & Hauser	FMX21-FE221GGE21APO	1
105	F31-F33	Control	24VDC Fused Terminal Block With Indication	Phoenix Contact	3046090	3
106	F31-F33	Control	1/4A Fuse, Analog Inputs	Bussmann	GMA-250	3
107	TBPP,1,DC,P1, 1A, P2 & 2A	All	Terminal Block, Gray 26-10 AWG Wire	Phoenix Contact	3044102	181
108	TBPP,1,DC,P1, 1A, P2 & 2A	All	Terminal Block End Barrier	Phoenix Contact	3047028	8
109	TBPP,1,DC,P1, 1A, P2 & 2A	All	Terminal Block End Anchor	Phoenix Contact	0800886	17
110	TBP1A, TBP2A	Pump 1 & 2	Terminal Block, Gray 26-8 AWG Wire, TBVFD1A & TBVFD2A	Phoenix Contact	3044131	8
111	GND	Control	Control Panel Ground Bar	Square D	PK5GTA	1
112	-	-	Meter Socket (SHIP LOOSE)	Milbank	UAP9701-RRL	1
113	-	-	Stainless Steel 60' Float (SHIP LOOSE)	Anchor Scientific	P60ND-SST	2
114	-	-	Insulated Ground Neutral (SHIP LOOSE)	Square D	SN400LA	1
115	-	-	Ground Bar Kit (SHIP LOOSE)	Square D	PKDGT1250	1
116	-	-	NEMA 4A S.S. Disconnect (SHIP LOOSE)	Square D	J250DS	1
117	-	-	Antenna Mast Stabilization Plate (Ship Loose)	EWS	Custom	1
118	-	-	Stainless Steel 'U' Bolt, 2" Pole, 5/16" Diameter Bolt w/ 2-1/2" Threads (SHIP LOOSE)			1
119	-	-	5/16" Stainless Steel Flat Washer for 'U' Bolt (SHIP LOOSE)			2
120	-	-	5/16" Stainless Steel Lock Washer for 'U' Bolt (SHIP LOOSE)			2
121	-	-	5/16" Stainless Steel Nut for 'U' Bolt (SHIP LOOSE)			2
122	-	-	Stainless Steel 'U' Bolt, 1/4" Diameter (SHIP LOOSE)			2
123	-	-	1/4" Stainless Steel 1/4" Nut for 'U' Bolt (SHIP LOOSE)			4
124	-	-	1-1/4" Reduction Bushing for Antenna Tower, ROHN R-TB50 (SHIP LOOSE)	Tessco	36882	1
125	PLC	Control	S7-200 Memory Module	Siemens	6ES7 2918GF230AX0	1
126	N	Power	Generator Neutral Block, (2)#6-400kcmil ... (6)#14-2	Square D	9080LBA163106	1
127	N	Power	Generator Neutral Block Cover	Square D	9080LB31	1
128	SPNL2	Power	32"X12" Aluminum Sidepanel	EWS	Custom	1
129	CT1-CT6	Pump 1 & 2	Current Transducer, 4-20mA; 10, 20 or 50A Range; Loop Powered	NK Technologies	AT1-420-24L-FF	6
130	DIS1, DIS2	Control	4 Digit Loop Powered Process Indicator; 4-20mA	Red Lion	CUB4LP40	2
131	SS5, SS6	Control	3 Position Selector Switch, 30MM	Square D	9001SKS46BH2	2
132	FM	Control	Flow Meter	Endress & Hauser	50P Compact	1
133	PR	Control	Pressure Transmitter	Endress & Hauser	PMP71-AAC1PG1RAA	1

ALL WORK SHALL BE CONSTRUCTED IN ACCORDANCE WITH THE LATEST EDITION OF THE E.C.U.A. STANDARD SPECIFICATIONS

REVISIONS	BY

IMPROVEMENTS TO WASTEWATER COLLECTION SYSTEM

LIFT STATION CONSTRUCTION DETAILS

ELECTRICAL STANDARDS

FINAL SUBMITTAL

EMERALD COAST UTILITIES AUTHORITY

APPROVED BY:

Drawn:	
Designed:	
Checked:	
Date:	MAY '13
Scale:	
Project No:	
Sheet No.	10
	Of 18 Sheets

ALL WORK SHALL BE CONSTRUCTED IN ACCORDANCE WITH THE LATEST EDITION OF THE E.C.U.A. STANDARD SPECIFICATIONS

REVISIONS	BY

Horsepower Related Compontents Equipment List								
Item	Tag	Horsepower						
		1	2	3	5	7.5	10	15
Main Circuit Breaker	CB1	HDL36030	HDL36030	HDL36030	HDL36040	HDL36045	HDL36050	HDL36080
Emergency Circuit Breaker	CB2	HDL36030	HDL36030	HDL36030	HDL36040	HDL36045	HDL36050	HDL36080
Starter Circuit Breaker	CB4,CB5	HDL36015	HDL36015	HDL36015	HDL36015	HDL36020	HDL36025	HDL36040
480V 3 Phase FVNR Starter	M1, M2	8536SAO12V02	8536SAO12V02	8536SBO12V02	8536SBO12V02	8536SCO12V02	8536SCO12V02	8536SDO12V02
Overloads	OL1, OL2	B3.00	B4.85	B6.90	B11.5	B17.5	B25	B32

Horsepower Related Power Conductors, CGB's and Hubs								
Conductor Tag		Horsepower						
		1	2	3	5	7.5	10	15
P-01, P-03 & P-04	Description	(3)#10	(3)#10	(3)#10	(3)#8	(3)#8	(3)#8	(3)#4
	Manufacturer	N/A	N/A	N/A	N/A	N/A	N/A	N/A
	Catalog #	N/A	N/A	N/A	N/A	N/A	N/A	N/A
	Length (Max Ft)	N/A	N/A	N/A	N/A	N/A	N/A	N/A
	Cable Dia (in)	0.164"	0.164"	0.164"	0.216"	0.216"	0.216"	0.324"
	Appleton Connector	(3) -CG-1275	(3) -CG-1275	(3) -CG-1275	(3) -CG-1850	(3) -CG-1850	(3) -CG-1850	(3) -CG-3150
	Connector Range	0.125"-0.250"	0.125"-0.250"	0.125"-0.250"	0.187"-0.312"	0.187"-0.312"	0.187"-0.312"	0.312"-0.437"
	Meyers Hub	(3) 3/4" - STA-2	(3) 3/4" - STA-2	(3) 3/4" - STA-2	(3) 1/2" - STA-1	(3) 1/2" - STA-1	(3) 1/2" - STA-1	(3) 1/2" - STA-1
P-02A	Description	(1)#10	(1)#10	(1)#10	(1)#10	(1)#10	(1)#10	(1)#8
	Manufacturer	N/A	N/A	N/A	N/A	N/A	N/A	N/A
	Catalog #	N/A	N/A	N/A	N/A	N/A	N/A	N/A
	Length (Max Ft)	N/A	N/A	N/A	N/A	N/A	N/A	N/A
	Cable Dia (in)	0.164"	0.164"	0.164"	0.164"	0.164"	0.164"	0.216"
	Appleton Connector	(1)-GC-1250	(1)-GC-1250	(1)-GC-1250	(1)-GC-1250	(1)-GC-1250	(1)-GC-1250	(1)-GC-1850
	Connector Range	0.125"-0.187"	0.125"-0.187"	0.125"-0.187"	0.125"-0.187"	0.125"-0.187"	0.125"-0.187"	0.187"-0.312"
	Hub	(1) 1/2" - STA-1	(1) 1/2" - STA-1	(1) 1/2" - STA-1	(1) 1/2" - STA-1	(1) 1/2" - STA-1	(1) 1/2" - STA-1	(1) 1/2" - STA-1
P-02B	Description	(1)#10	(1)#10	(1)#10	(1)#10	(1)#10	(1)#10	(1)#8
	Manufacturer	Southwire	Southwire	Southwire	Southwire	Southwire	Southwire	Southwire
P-05 & P-06	Description	(3)#10	(3)#10	(3)#10	(3)#8	(3)#8	(3)#8	(3)#4
	Manufacturer	Southwire	Southwire	Southwire	Southwire	Southwire	Southwire	Southwire
	Catalog #	N/A	N/A	N/A	N/A	N/A	N/A	N/A
	Length (Max Ft)	N/A	N/A	N/A	N/A	N/A	N/A	N/A
	Cable Dia (in)	0.164"	0.164"	0.164"	0.216"	0.216"	0.216"	0.324"
	Appleton Connector	(3) -CG-1275	(3) -CG-1275	(3) -CG-1275	(3) -CG-1850	(3) -CG-1850	(3) -CG-1850	(3) -CG-3150
	Connector Range	0.125"-0.250"	0.125"-0.250"	0.125"-0.250"	0.187"-0.312"	0.187"-0.312"	0.187"-0.312"	0.312"-0.437"
	Hub	(3) 3/4" - STA-2	(3) 3/4" - STA-2	(3) 3/4" - STA-2	(3) 1/2" - STA-1	(3) 1/2" - STA-1	(3) 1/2" - STA-1	(3) 1/2" - STA-1
P-07 & P-09	Description	(3)#14 W/G, TC	(3)#14 W/G, TC	(3)#14 W/G, TC	(3)#14 W/G, TC	(3)#14 W/G, TC	(3)#14 W/G, TC	(3)#10 W/G, TC
	Manufacturer	Houston Wire	Houston Wire	Houston Wire	Houston Wire	Houston Wire	Houston Wire	Houston Wire
	Catalog #	HW151 1403G	HW151 1403G	HW151 1403G	HW151 1403G	HW151 1403G	HW151 1403G	HW151 1003G
	Length (Max Ft)	19 FT	19 FT	19 FT	19 FT	19 FT	19 FT	19 FT
	Cable Dia (in)	0.364"	0.364"	0.364"	0.364"	0.364"	0.364"	0.447"
	Appleton Connector	(2) -CG-3150	(2) -CG-3150	(2) -CG-3150	(2) -CG-3150	(2) -CG-3150	(2) -CG-3150	(2) -CG-3750
	Connector Range	0.312"-0.437"	0.312"-0.437"	0.312"-0.437"	0.312"-0.437"	0.312"-0.437"	0.312"-0.437"	0.375"-0.500"
	Hub	(2) 1/2" - STA-1	(2) 1/2" - STA-1	(2) 1/2" - STA-1	(2) 1/2" - STA-1	(2) 1/2" - STA-1	(2) 1/2" - STA-1	(2) 1/2" - STA-1
P-08 & P-10	Description	(3)#14	(3)#14	(3)#14	(3)#14	(3)#14	(3)#14	(3)#10
	Manufacturer	Southwire	Southwire	Southwire	Southwire	Southwire	Southwire	Southwire

IMPROVEMENTS TO WASTEWATER COLLECTION SYSTEM

LIFT STATION CONSTRUCTION DETAILS

ELECTRICAL STANDARDS

FINAL SUBMITTAL

EMERALD COAST UTILITIES AUTHORITY

APPROVED BY:

Drawn:
Designed:
Checked:
Date: MAY '13
Scale:
Project No:
Sheet No. 11
Of 18 Sheets

ALL WORK SHALL BE CONSTRUCTED IN ACCORDANCE WITH THE LATEST EDITION OF THE E.C.U.A. STANDARD SPECIFICATIONS

Power & Control Conductors, CG8's and Hubs

Cable Number	Description	Manufacturer	Catalog Numer	Length (Max Ft)	Cable Diameter	Appleton Liquidtight Cable Connector	Connector Cable Range	Crouse-Hinds Myers Hub	From Panel/Enclosure	To Panel/Enclosure
P-13	(3)#8 AWG W/GND, Tray Cable	Houston Wire & Cable	HW 154 00803	6 FT	0.58"	(1) - CG-5075	0.500"-0.625"	(1) 3/4" - STA-2	Power Panel	480/240-120V Transformer
P-14	(3)#6 AWG W/GND, Tray Cable	Houston Wire & Cable	HW 154 00603	6 FT	0.69"	(1) - CG-6275	0.625"-0.750"	(1) 3/4" - STA-2	480/240-120V Transformer	Power Panel
P-15	3-1/C #12 AWG	N/A	N/A	AS REQ'D	N/A	N/A	N/A	N/A	Power Panel	Power Panel
P-16	3-1/C #12 AWG	N/A	N/A	AS REQ'D	N/A	N/A	N/A	N/A	Power Panel	Power Panel
C-01	(16) #14 AWG, Tray Cable	Houston Wire & Cable	HW 151 01416	24 FT	0.68"	(2) - CG-6275	0.625"-0.750"	(2) 3/4" - STA-2	Power Panel	Control Panel
C-02	(5) #14 AWG, Tray Cable	Houston Wire & Cable	HW 151 01405	19 FT	0.41"	(2) - CG-3750	0.375"-0.500"	(2) 1/2" - STA-1	Control Panel	Pump 1 Panel
C-03	(16) #14 AWG, Tray Cable	Houston Wire & Cable	HW 151 01416	22 FT	0.68"	(2) - CG-6275	0.625"-0.750"	(2) 3/4" - STA-2	Control Panel	Pump 2 Panel
C-04	1 Pair #16 SH, Tray Cable	Houston Wire & Cable	HW 120 01601	22 FT	0.33"	(2) - CG-2575	0.250"-0.375"	(2) 3/4" - STA-2	Pump 1 Panel	Control Panel
C-05	1 Pair #16 SH, Tray Cable	Houston Wire & Cable	HW 120 01601	19 FT	0.33"	(2) - CG-2575	0.250"-0.375"	(2) 3/4" - STA-2	Pump 2 Panel	Control Panel
PUMP 1-PWR	Per Mfg Specs	N/A	N/A	N/A	N/A	CG Series based on Mfg Specs	N/A	STA Series based on Mfg Specs	Field (Pump 1)	Pump 1 Panel
PUMP 1-MTP	Per Mfg Specs	N/A	N/A	N/A	N/A	CG Series based on Mfg Specs	N/A	STA Series based on Mfg Specs	Field (Pump 1)	Pump 1 Panel
PUMP 1-SF	Per Mfg Specs	N/A	N/A	N/A	N/A	CG Series based on Mfg Specs	N/A	STA Series based on Mfg Specs	Field (Pump 1)	Pump 1 Panel
PUMP 2-PWR	Per Mfg Specs	N/A	N/A	N/A	N/A	CG Series based on Mfg Specs	N/A	STA Series based on Mfg Specs	Field (Pump 2)	Pump 2 Panel
PUMP 2-MTP	Per Mfg Specs	N/A	N/A	N/A	N/A	CG Series based on Mfg Specs	N/A	STA Series based on Mfg Specs	Field (Pump 2)	Pump 2 Panel
PUMP 2-SF	Per Mfg Specs	N/A	N/A	N/A	N/A	CG Series based on Mfg Specs	N/A	STA Series based on Mfg Specs	Field (Pump 2)	Pump 2 Panel
Float Switch 1	Float Switch Cable	BY OTHERS	N/A	N/A	0.56"	(1) - CG-5050	0.500"-0.625"	(1) 1/2" - STA-1	Field (Float Switch)	Control Panel
Float Switch 2	Float Switch Cable	BY OTHERS	N/A	N/A	0.56"	(1) - CG-5050	0.500"-0.625"	(1) 1/2" - STA-1	Field (Float Switch)	Control Panel
Pressure Xducer	Pressure Transducer Cable	BY OTHERS	N/A	N/A	0.35"	(1) - G-3150	0.312"-0.437"	(1) 1/2" - STA-1	Field (Float Switch)	Control Panel
Antenna COAX	Coaxial Cable	BY OTHERS	N/A	N/A	0.408"	(1) - CG-3750	0.375"-0.500"	(1) 1/2" - STA-1	Field (Antenna)	Control Panel

REVISIONS	BY

IMPROVEMENTS TO WASTEWATER COLLECTION SYSTEM

LIFT STATION CONSTRUCTION DETAILS

ELECTRICAL STANDARDS

FINAL SUBMITTAL

ECUA

EMERALD COAST UTILITIES AUTHORITY

APPROVED BY:

Drawn:

Designed:

Checked:

Date: MAY '13

Scale:

Project No:

Sheet No. 12

Of 18 Sheets

NOTES:

ALL WORK SHALL BE CONSTRUCTED IN ACCORDANCE WITH THE LATEST EDITION OF THE E.C.U.A. STANDARD SPECIFICATIONS

1) ALL SPARE WIRE WILL BE CLEARLY LABELED WITH THE CABLE NUMBER & A SPARE DESIGNATION ON INDIVIDUAL WIRES. THESE SPARES WILL BE LONG ENOUGH TO REACH ANY POINT IN THE PANEL.
2) SPARE CONDUCTORS SHOULD BE TRIMMED AND HEAT SHRINK SHOULD BE USED TO SECURE THE SPARE CONDUCTORS IN THE CABLE.
3) THE INNER CONNECTING CONDUCTORS BETWEEN THE PANELS ARE CODED AS FOLLOWS: THE FIRST GROUP OF CHARACTER IS THE WIRE NUMBER AND THE SECOND GROUP IS THE COLOR (I.E. 1(BK) SIGNIFIES THAT THE WIRE NUMBER IS 1 AND THE COLOR IS BLACK). WIRE COLOR CODE AS FOLLOWS: BK-BLACK, RD-RED, BU-BLUE, OR-ORANGE, YL-YELLOW, BN-BROWN. FOR COLORS THAT ARE DENOTED AS XX/YY, XX IS THE BASE COLOR AND YY IS THE SPIRAL STRIPE (I.E. RD/BK IS A RED WIRE WITH A BLACK SPIRAL STRIPE).
4) SEE SHEETS 11 & 12 FOR PANEL TO PANEL INNER CONNECTING CONDUCTOR AND CABLE DETAILS.

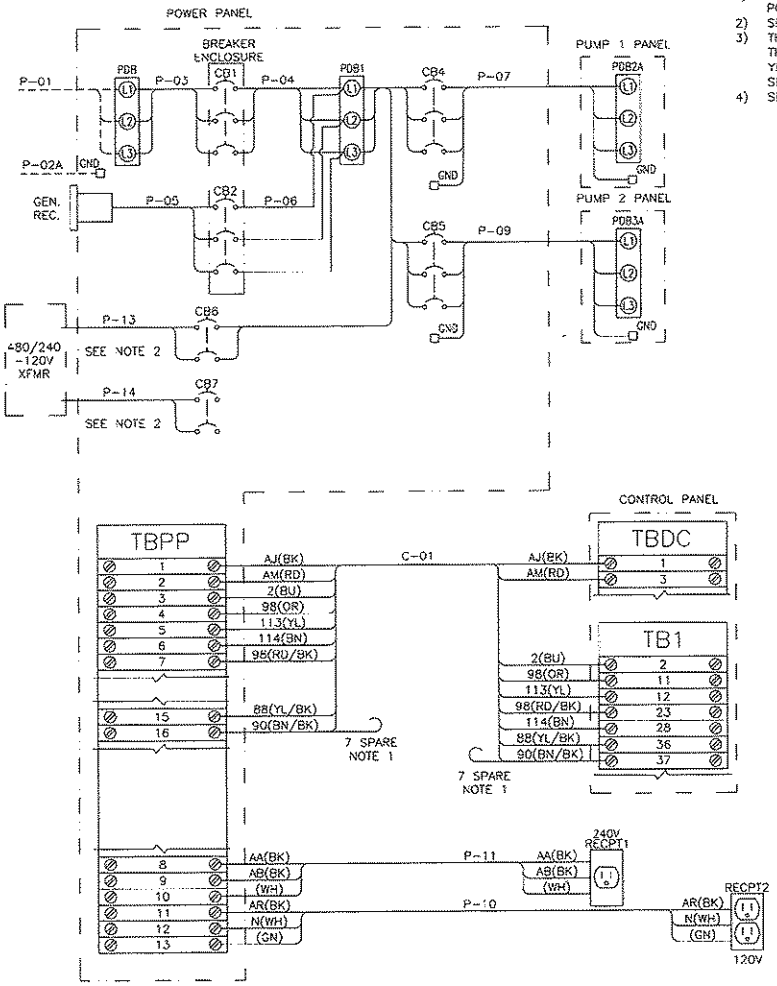

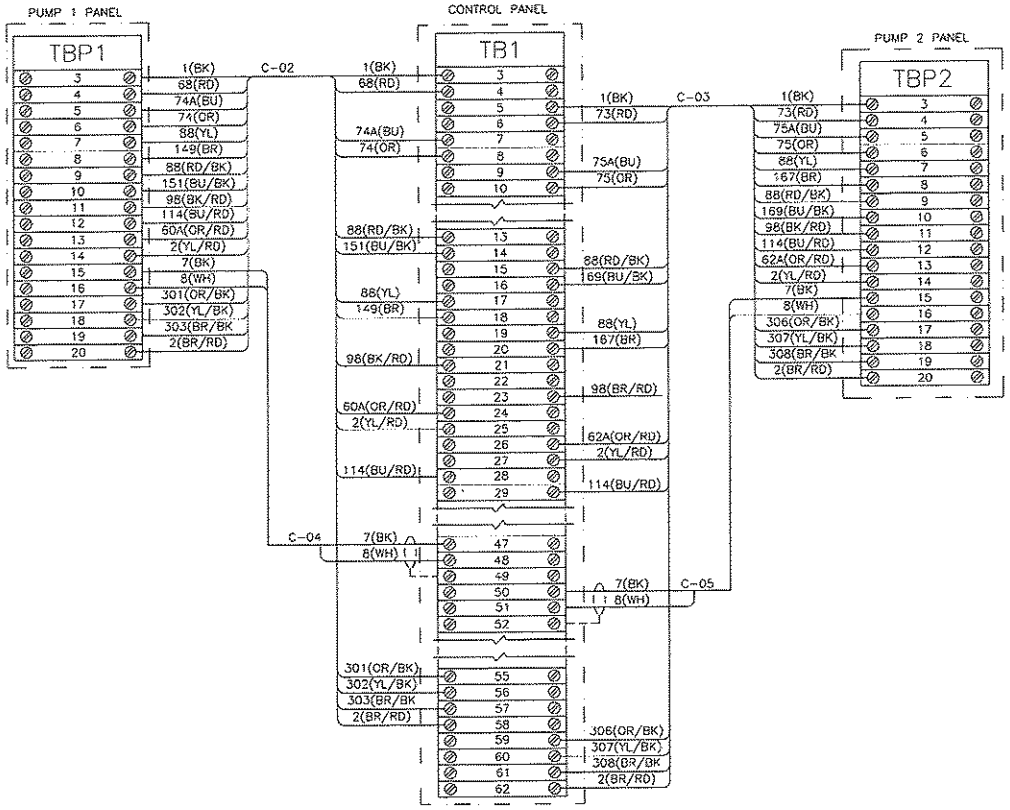

REVISIONS	BY

IMPROVEMENTS TO WASTEWATER COLLECTION SYSTEM

LIFT STATION CONSTRUCTION DETAILS

ELECTRICAL STANDARDS

FINAL SUBMITTAL

EMERALD COAST UTILITIES AUTHORITY

APPROVED BY:

Drawn:	
Designed:	
Checked:	
Date:	MAY '13
Scale:	
Project No:	
Sheet No.	13
	OF 18 Sheets

ALL WORK SHALL BE CONSTRUCTED IN ACCORDANCE WITH THE LATEST EDITION OF THE E.C.U.A. STANDARD SPECIFICATIONS

NOTES:

1. TOP AND BOTTOM OF BASE TO BE LEFT OPEN.
2. DRILL TOP OF BASE TO ATTACH ENCLOSURES AS REQUIRED.
3. DRILL BOTTOM OF BASE TO ATTACH TO SLAB AS REQUIRED.

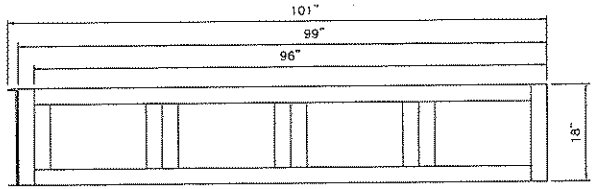

TOP VIEW

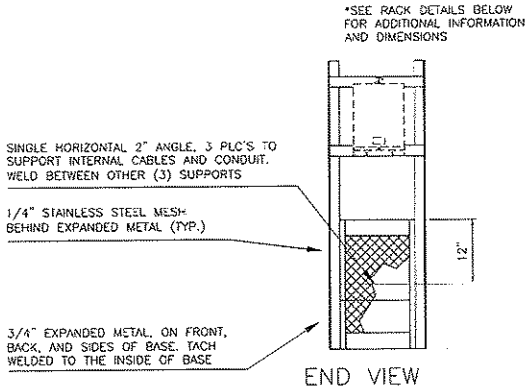

END VIEW

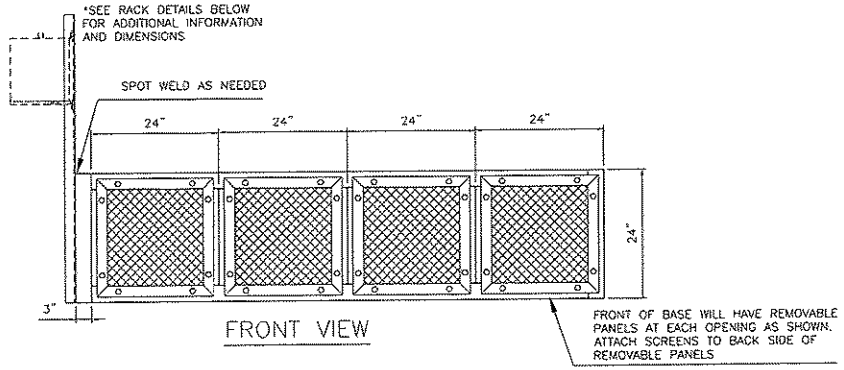

FRONT VIEW

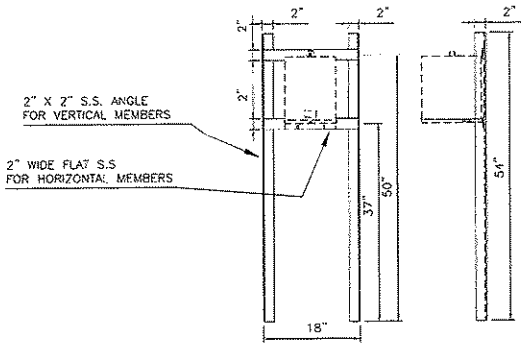

RACK DETAILS

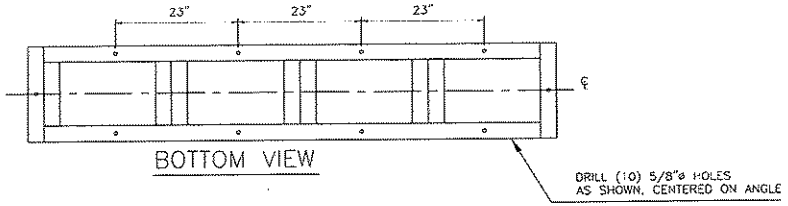

BOTTOM VIEW

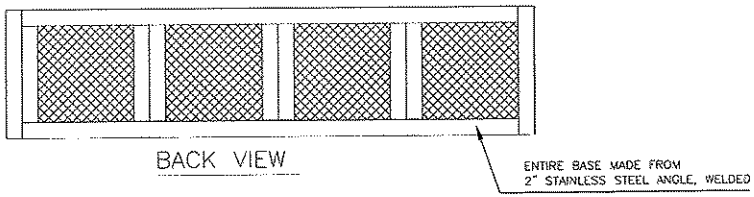

BACK VIEW

REVISIONS	BY

IMPROVEMENTS TO WASTEWATER COLLECTION SYSTEM

LIFT STATION CONSTRUCTION DETAILS

ELECTRICAL STANDARDS

FINAL SUBMITTAL

EMERALD COAST UTILITIES AUTHORITY

APPROVED BY:

Drawn:
Designed:
Checked:
Date: MAY '13
Scale:
Project No:
Sheet No: 14
Of 18 Sheets

ALL WORK SHALL BE CONSTRUCTED IN ACCORDANCE WITH THE LATEST EDITION OF THE E.C.U.A. STANDARD SPECIFICATIONS

Power Panel Fuse Schedule				
Fuse	Type	Voltage	Amps	Description
F1	KTK-R-1	600	1A	Phase Monitor A Phase
F2	KTK-R-1	600	1A	Phase Monitor B Phase
F3	KTK-R-1	600	1A	Phase Monitor C Phase
F10	AGC-3	250	3A	Power Supply 1 Primary
F11	AGC-3	250	3A	Power Supply 2 Primary

Pump 1 Panel Fuse Schedule				
Fuse	Type	Voltage	Amps	Description
F4	FNQ-R-1/4	600	1/4A	Pump 1 CPT Phase A
F5	FNQ-R-1/4	600	1/4A	Pump 1 CPT Phase C
F6	FNQ-1/2	500	1/2A	Pump 1 CPT Secondary

Pump 2 Panel Fuse Schedule				
Fuse	Type	Voltage	Amps	Description
F7	FNQ-R-1/4	600	1/4A	Pump 2 CPT Phase A
F8	FNQ-R-1/4	600	1/4A	Pump 2 CPT Phase C
F9	FNQ-1/2	500	1/2A	Pump 2 CPT Secondary

Control Panel Fuse Schedule				
Fuse	Type	Voltage	Amps	Description
F12	AGC-10	250	10A	Power Supply 1 Secondary
F13	AGC-10	250	10A	Power Supply 2 Secondary
F14	AGC-10	250	10A	Control Power
F15	AGC-10	250	10A	Batteries
F16	AGC-2	250	2A	Radio Power Supply Primary
F17	AGC-2	250	2A	Radio Power Supply Secondary
F18	AGC-1/4	250	1/4A	Pump 1 Motor Thermal
F19	AGC-1/4	250	1/4A	Pump 2 Motor Thermal
F20	AGC-1/10	250	1/10A	Operator Interface
F21	AGC-1	250	1A	Digital Inputs 0.0-1.4
F22	AGC-1	250	1A	Digital Inputs 1.5-2.7
F23	AGC-2	250	2A	Digital Outputs 0.0-0.7
F24	AGC-2	250	2A	Digital Outputs 1.0-1.7
F25	AGC-1-1/2	250	1-1/2A	PLC Power
F26	AGC-3/4	250	3/4A	Process Transmitter Supply
F27	AGC-1/10	250	1/10A	Analog Inputs
F28	AGC-1/10	250	1/10A	Analog Outputs
F29	GMA-1/4	250	1/4A	Analog Input 2
F30	GMA-1/4	250	1/4A	Analog Input 3
F31	GMA-1/4	250	1/4A	Analog Input 4

HMI BUTTON LEGEND	
F1	FAULT RESET/ENABLE INTRUSION
SHIFT+F1	DISABLE INTRUSION
F2	ALTERNATE PUMP ASSIGNMENTS
F3	RESET PUMP 1 RUNTIME
SHIFT+F3	RESET PUMP 2 RUNTIME
F4	ALARMS SCREEN
F5	OVERVIEW SCREEN
F6	PUMP 1 SCREEN
F7	PUMP 2 SCREEN
F8	SETPOINTS SCREEN

CONTROL PANEL ISF INFORMATION TAGS

THIS AREA IN BLUE IS FOR INTRINSICALLY SAFE CIRCUITS AND DEVICES ONLY. THIS AREA INCLUDES THE AIR SPACE BRIGHT IN FRONT OF THE BLUE AREA BETWEEN THE BACKPANEL AND THE LOCKSPIE WALLS AND DOOR INCLUDING THE BOTTOM OF THE ENCLOSURE. ONLY INTRINSICALLY SAFE DEVICES AND WIRING ARE ALLOWED IN THIS AREA. DO NOT ROUTE NON-INTRINSICALLY SAFE WIRE THROUGH THE AREA OF ENCLOSURE.

WARNING

SUBSTITUTION OF COMPONENTS MAY IMPAIR INTRINSIC SAFETY

CONTROL PANEL EXTERIOR TAG INFORMATION

WARNING

TO PREVENT IGNITION OF FLAMMABLE OR COMBUSTIBLE ATMOSPHERES DISCONNECT POWER BEFORE SERVICING

PROVIDES INTRINSICALLY SAFE CIRCUITS HAZARDOUS LOCATIONS CLASS I, GROUPS A, B, C, AND D WHEN CONNECTED PER NEC ARTICLE DRAWINGS ON MAIN NAMEPLATE EXCELL

CONTROL PANEL DEVICE PORT TAG INFORMATION

SECURELY SHUT ALL REAR DOOR LATCHES BEFORE CLOSING OUTER DOOR. FAILURE TO DO SO THEREF INTERLOCKING COILS CAUSE THE OUTER DOOR TO JAM WHEN RE-OPENED

Nameplate Data							
Total Load (FLA)	16	18	21	27	33	39	53
Motor Hp	1	2	3	5	7.5	10	15
Motor FLA	2.1	3.4	4.8	7.6	11	14	21

Torque Rating Table							
	Horsepower						
Component	1	2	3	5	7.5	10	15
Incoming Distribution Block (PDB1)	35lb-in/4.0N-m	35lb-in/4.0N-m	35lb-in/4.0N-m	35lb-in/4.0N-m	40lb-in/4.5N-m	40lb-in/4.5N-m	120lb-in/13.5N-m
Main Ground Block	20lb-in/2.2N-m	20lb-in/2.2N-m	20lb-in/2.2N-m	20lb-in/2.2N-m	20lb-in/2.2N-m	20lb-in/2.2N-m	25lb-in/2.8N-m
Motor Distribution Block (PDB2 & 3)	35lb-in/4.0N-m	35lb-in/4.0N-m	35lb-in/4.0N-m	35lb-in/4.0N-m	35lb-in/4.0N-m	35lb-in/4.0N-m	35lb-in/4.0N-m
Motor Ground Block	35lb-in/4.0N-m	35lb-in/4.0N-m	35lb-in/4.0N-m	35lb-in/4.0N-m	35lb-in/4.0N-m	35lb-in/4.0N-m	35lb-in/4.0N-m

REVISIONS	BY

IMPROVEMENTS TO WASTEWATER COLLECTION SYSTEM

LIFT STATION CONSTRUCTION DETAILS

ELECTRICAL STANDARDS

FINAL SUBMITTAL

ECUA EMERALD COAST UTILITIES AUTHORITY

APPROVED BY:

Drawn:
Designed:
Checked:
Date: MAY '13
Scale:
Project No:
Sheet No. 15
OF 18 Sheets

ALL WORK SHALL BE CONSTRUCTED IN ACCORDANCE WITH THE LATEST EDITION OF THE E.C.U.A. STANDARD SPECIFICATIONS

HAZARDOUS (CLASSIFIED) LOCATION

CLASS I, ZONE 0 OR 1, GROUPS IIC, IIB, IIA or
CLASS I, DIVISION 1, GROUPS A,B,C,D
CLASS II, DIVISION 1, GROUPS E,F,G
CLASS III, DIVISION 1

NON-HAZARDOUS LOCATION

CLASS I, ZONE 2, GROUPS IIC, IIB, IIA or
CLASS I, DIVISION 2, GROUPS A,B,C,D

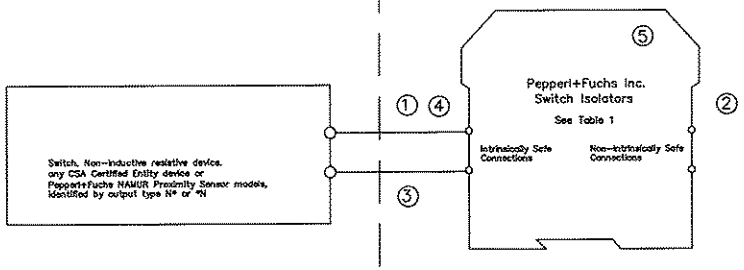

Notes:

① The intrinsically safe wiring must be installed in accordance with the Canadian Electrical Code CSA C22.1, Part 1, Appendix F.

② Barriers listed in Table 1 shall not be connected to any device that uses or generates in excess of 250Vrms or DC unless it has been determined that the voltage is adequately isolated from the barrier. Barriers listed in Table 2 shall not be connected to any device that uses or generates in excess of 60Vrms or DC unless the voltage is limited by an adequate means.

③ Any combination of up to 10 channels of the barriers listed in Table 1 or Table 2 may be connected in parallel and connected to a switch in a hazardous location.

④ The Entity concept allows interconnection of intrinsically safe apparatus with associated apparatus not specifically examined in combination as a system when the approved values of Voc and Isc for the associated apparatus are less than or equal to Vmax and Imax for the intrinsically safe apparatus and the approved values of Ca and La for the associated apparatus are greater than Ci + Ccable and Li + Lcable, respectively, for the intrinsically safe apparatus.

⑤ The following models with part number greater than 100000 are approved for mounting in a Class I, Zone 2, Groups IIC,IIB,IIA or Class I, Division 2, Groups A,B,C,D hazardous (classified) location: KF**-SR2-EX1.W, KF**-SR2-EX1.W.LB, KF**-SR2-EX2.W, KFD2-SR2-EX2.25, KFD2-ST2-EX1.*, KFD2-ST2-EX2.*, KFD2-SOT2-EX1.*, KFD2-SOT2-EX2.*.

WARNING: Substitution of components may impair intrinsic safety and/or suitability for use in Class I, Division 2, Groups A,B,C,D or Class I, Zone 2, Groups IIC,IIB,IIA.
ADVERTISSEMENT: La substitution de composants peut compromettre la sécurité intrinsèque.

No changes without prior permission
CSA

THIS DRAWING CONTAINS PROPRIETARY DATA. NO DISCLOSURE, REPRODUCTION, OR USE OF ANY PART MAY BE MADE EXCEPT BY WRITTEN PERMISSION.

Title Installation Drawing for CSA Certified Switch Isolators

Revisions				ECO No.			
In.	Date	Cons.	Resp.	Appr.	Pepperl+Fuchs® Inc. Twinsburg, OH 44087-2202	Repl. No. -	Draw. No. 116-0047j	Sh. 1 of 2
	2-20-2008						

TABLE 1: Barriers Certified to CSA Standard C22.2 No. 157 (Um = 250 V)

Model Numbers	Terminals	SYSTEM		ENTITY							
		V_{max}(V)	Res. (Ω)	V_{oc} (V)	I_{sc}(mA)	C_a(uF) GRPS			L_a(mH) GRPS		
						A,B	C,E	D,F,G	A,B	C,E	D,F,G
KFD2-SOT-Ex1*,KFD2-SOT-Ex2* KFD2-SR-Ex1*,KFD2-SR-Ex2* KFD2-SRT-Ex1* KFD2-ST-Ex1*,KFD2-ST-Ex2* KFA5-SR2-Ex1*,KFA5_SR2-Ex2* KFA6-SR2-Ex1*,KFA6-SR2-Ex2* KFD2-SR2-Ex1*,KFD2-SR2-Ex2*	1-3, 2-3; 4-6, 5-6	12.6	650	12.9	19.8	1.273	3.820	10.18	84.88	298.7	744.4
KFA5-SOT2-Ex1*,KFA5-SOT2-Ex2* KFA6-SOT2-Ex1*,KFA6-SOT2-Ex2*	1-3, 2-3; 4-6, 5-6	10.5	811	10.5	13.0	2.66	7.9	21.3	192	671	1000

TABLE 2: Barriers Certified to CSA Standard E79-11 (Um = 60 V)

Model Numbers	Terminals	Load Parameters							
		U_o (V_{oc})	i_o (I_{sc})	C_a(uF) GRPS			L_a(mH) GRPS		
				IIC (A,B)	IIB (C,E)	IIA (D,F,G)	IIC (A,B)	IIB (C,E)	IIA (D,F,G)
KFD2-SOT2-Ex1*,KFD2-SOT2-Ex2* KFD2-ST2-Ex1*,KFD2-ST2-Ex2*	1-3, 2-3; 4-6, 5-6	10.5	13.0	2.66	7.9	21.3	192	671	1000

No changes without prior permission
CSA

THIS DRAWING CONTAINS PROPRIETARY DATA. NO DISCLOSURE, REPRODUCTION, OR USE OF ANY PART MAY BE MADE EXCEPT BY WRITTEN PERMISSION.

Title Installation Drawing for CSA Certified Switch Isolators

Revisions				ECO No.			
In.	Date	Cons.	Resp.	Appr.	Pepperl+Fuchs® Inc. Twinsburg, OH 44087-2202	Repl. No. -	Draw. No. 116-0047j	Sh. 2 of 2
	2-20-2008						

REVISIONS	BY

IMPROVEMENTS TO WASTEWATER COLLECTION SYSTEM
LIFT STATION CONSTRUCTION DETAILS
ELECTRICAL STANDARDS
FINAL SUBMITTAL

EMERALD COAST UTILITIES AUTHORITY

APPROVED BY:

Drawn:
Designed:
Checked:
Date: MAY '13
Scale:
Project No:
Sheet No. 16
Of 18 Sheets

GENERAL ELECTRICAL NOTES

NEW WORK:

1. ENTIRE ELECTRICAL INSTALLATION SHALL BE IN ACCORDANCE WITH THE LATEST EDITION (UNLESS NOTED OTHERWISE) OF THE FOLLOWING CODES AND STANDARDS:
   1.1. NATIONAL ELECTRICAL CODE (NFPA 70).
   1.2. STANDARD FOR FIRE PROTECTION IN WASTEWATER TREATMENT AND COLLECTION FACILITIES (NFPA 820).
2. THE CONTRACTOR SHALL BE RESPONSIBLE FOR READING ALL PROJECT SPECIFICATIONS AND WILL BE RESPONSIBLE FOR MEETING ALL REQUIREMENTS OUTLINED IN THE SPECIFICATIONS.
3. CONTRACTOR SHALL COORDINATE ALL WORK WITH OTHER TRADES PRIOR TO ROUGH-IN AND INSTALLATION.
4. WORKING SPACE FOR ALL ELECTRICAL AND CONTROL EQUIPMENT OPERATING AT 600V VOLTS OR LESS TO GROUND AND LIKELY TO REQUIRE EXAMINATION, ADJUSTMENT, SERVICING, OR MAINTENANCE WHILE ENERGIZED SHALL COMPLY WITH NEC, ARTICLE 110.26.
5. THE ELECTRICAL DESIGN PROVIDES A NUMBER OF BRANCH CIRCUITS, AMPACITY AND OVERCURRENT PROTECTION FOR OTHER DIVISIONS DESIGN BASIS EQUIPMENT CONFORMING TO MANUFACTURER'S SPECIFICATIONS AVAILABLE AT TIME OF DESIGN. THE CONTRACTOR SHALL VERIFY ALL EQUIPMENT LOADS PRIOR TO ROUGH-IN. IF REQUIREMENTS OF EQUIPMENT ACTUALLY PROVIDED UNDER CONTRACT FOR CONSTRUCTION ARE DIFFERENT, CONTRACTOR SHALL MAKE ALL CHANGES NECESSARY WITHOUT INCREASE IN THE CONTRACT AMOUNT. SUCH CHANGES SHALL BE BASED UPON REQUIREMENTS, NAMEPLATE VALUES AND CODE REQUIREMENTS, WHICHEVER IS MORE STRINGENT, AND MAY INCLUDE, BUT ARE NOT LIMITED TO: SIZE OF CONDUCTORS, SIZE OF CONDUIT, QUANTITY OF CONDUCTORS AND CONDUITS, TYPE AND SIZE OF CIRCUIT BREAKER OR DISCONNECT, OVERLOADS, FULL-VOLTAGE STARTERS, REDUCED VOLTAGE SOFT STARTERS, VARIABLE FREQUENCY DRIVES, AND FUSE PROTECTION.
6. THE ELECTRICAL CONTRACTOR IS REQUIRED TO COORDINATE, PROVIDE, AND INSTALL A FULLY OPERATIONAL AND CODE COMPLIANT ELECTRICAL SYSTEM. THIS MAY INCLUDE THE ADDITION OF ELECTRICAL ITEMS NOT SHOWN ON THE ELECTRICAL PLANS, BUT REQUIRED FOR SYSTEM OPERATION.
7. CONTRACTOR SHALL COORDINATE INSTALLATION OF ELECTRICAL SERVICE WITH ELECTRICAL UTILITY COMPANY PROVIDING ELECTRICAL SERVICE TO FACILITY. CONTRACTOR SHALL PAY ALL FEES ASSESSED BY ELECTRICAL UTILITY COMPANY TO PROVIDE ELECTRICAL SERVICE TO FACILITY.
8. CONTRACTOR SHALL EXCAVATE AND CONDUCT DEMOLITION SO AS TO AVOID DAMAGE TO EXISTING UTILITIES AND OTHER UNDERGROUND OR CONCEALED ITEMS. IF EXISTING OR NEW ITEMS ARE DAMAGED, THE CONTRACTOR SHALL NOTIFY THE OWNER AT ONCE OF ALL DAMAGE AND SHALL REPAIR (OR REPLACE IF NECESSARY) TO THE ORIGINAL CONDITION TO THE SATISFACTION OF OWNER AND ENGINEER AT NO CHARGE IN THE CONTRACT AMOUNT.
9. THE CONTRACTOR SHALL BE RESPONSIBLE FOR PROVIDING DETAILED ELECTRICAL AND CONTROL EQUIPMENT LAYOUT DRAWINGS TO THE ENGINEER AND OWNER FOR APPROVAL PRIOR TO INSTALLATION.
10. ALL CONDUITS NOT LOCATED UNDER SLAB SHALL HAVE A MINIMUM BURIAL DEPTH OF 42", UNLESS NOTED OTHERWISE.
11. CONDUITS SHALL BE BURIED 42" (MINIMUM) BELOW GRADE WITH MARKER TAPE 6" ABOVE TOP OF CONDUIT, UNLESS NOTED OTHERWISE.
12. MINIMUM SIZE CONDUIT SHALL BE 1" (UNLESS NOTED OTHERWISE).
13. CONDUIT ROUTINGS AND DEVICE/EQUIPMENT LOCATIONS SHOWN ARE DIAGRAMMATIC ONLY. CONTRACTOR SHALL FIELD ROUTE AND LOCATE AS REQUIRED.
14. CONTRACTOR SHALL PROVIDE PULL BOXES IN POWER CIRCUIT CONDUIT AS REQUIRED TO LIMIT THE NUMBER OF BENDS TO A MAXIMUM OF 270° OR THREE 90° BENDS.
15. ALL WIRE SHALL BE COPPER.
16. ALL ELECTRICAL CIRCUITS SHALL INCLUDE A GREEN GROUNDING CONDUCTOR SIZED PER NEC.
17. CONDUCTORS SHALL BE TERMINATED ON TERMINAL BLOCKS.
18. THE CONTRACTOR SHALL TAG ALL POWER AND CONTROL SYSTEM CABLING AT ALL TERMINATION POINTS.
19. FINAL CONNECTION TO ALL EQUIPMENT IS SHOWN DIAGRAMMATIC. PROVIDE FINAL CONNECTION AS REQUIRED PER MANUFACTURER OF EQUIPMENT.
20. CONTRACTOR SHALL MAINTAIN A SET OF PRINTS AND MARK-UP DURING CONSTRUCTION TO REFLECT "AS-BUILT" CONDITIONS. PRINTS SHALL BE DELIVERED TO THE ENGINEER UPON COMPLETION OF THE PROJECT.
21. ALL HARDWARE SHALL BE STAINLESS STEEL.
22. ALUMINUM CONDUIT SHALL BE COATED WITH (2) WRAPS OF ANTI-CORROSION TAPE OR RUN THROUGH A SCHEDULE 80 PVC SLEEVE TO WHEN IN CONTACT WITH CONCRETE.
23. BARE COPPER SHALL BE COATED WITH (2) WRAPS OF ANTI-CORROSION TAPE OR RUN THROUGH A SCHEDULE 80 PVC SLEEVE TO WHEN IN CONTACT WITH CONCRETE.
24. ENGINEER OF RECORD SHALL BE RESPONSIBLE FOR FINAL SIZING OF ALL EQUIPMENT.

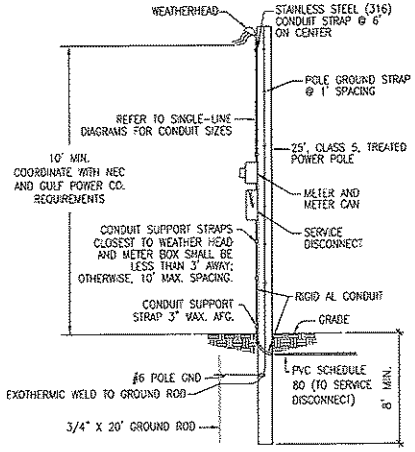

SERVICE LATERAL CONDUIT SHALL BE 3" (MIN) SCHEDULE 80 PVC BELOW GRADE AND 3" (MIN) RIGID AL CONDUIT ABOVE GRADE. ANY REQUIREMENTS BY THE UTILITY COMPANY SHALL PREVAIL OVER THE REQUIREMENTS OUTLINED HERE AND SHALL BE COORDINATED BY THE ELECTRICAL CONTRACTOR PRIOR TO INSTALLATION.

A3 UTILITY POLE DETAIL
NOT TO SCALE

ALL WORK SHALL BE CONSTRUCTED IN ACCORDANCE WITH THE LATEST EDITION OF THE E.C.U.A. STANDARD SPECIFICATIONS

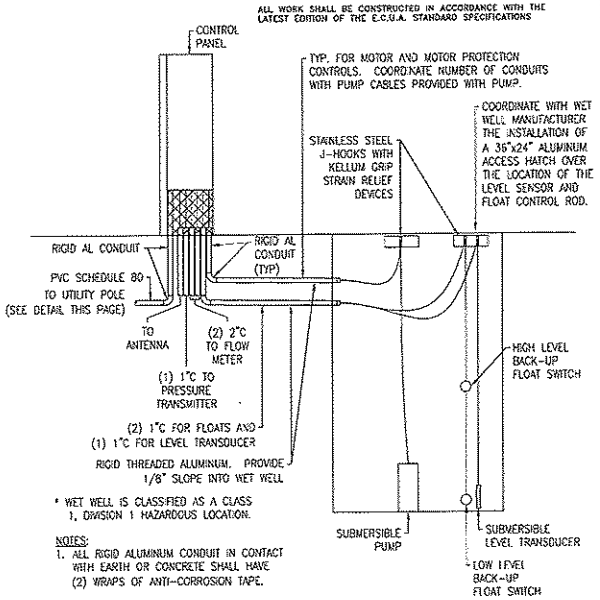

* WET WELL IS CLASSIFIED AS A CLASS 1, DIVISION 1 HAZARDOUS LOCATION.

NOTES:
1. ALL RIGID ALUMINUM CONDUIT IN CONTACT WITH EARTH OR CONCRETE SHALL HAVE (2) WRAPS OF ANTI-CORROSION TAPE.

B4 TYPICAL WET WELL SECTION DETAIL
NOT TO SCALE

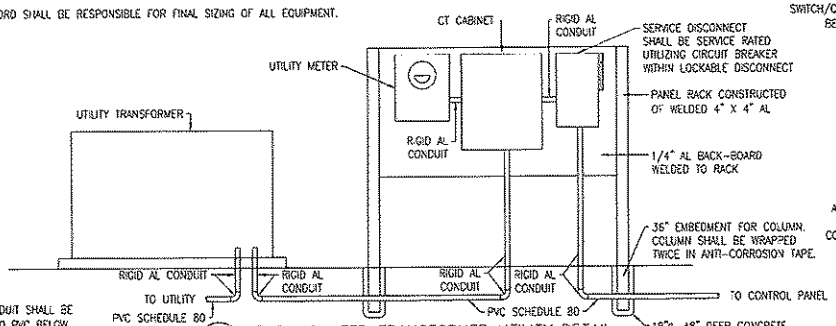

* SERVICE LATERAL CONDUIT SHALL BE 3" (MIN) SCHEDULE 80 PVC BELOW GRADE AND 3" (MIN) RIGID ALUMINUM CONDUIT ABOVE GRADE.

A1 PAD MOUNTED TRANSFORMER UTILITY DETAIL
NOT TO SCALE

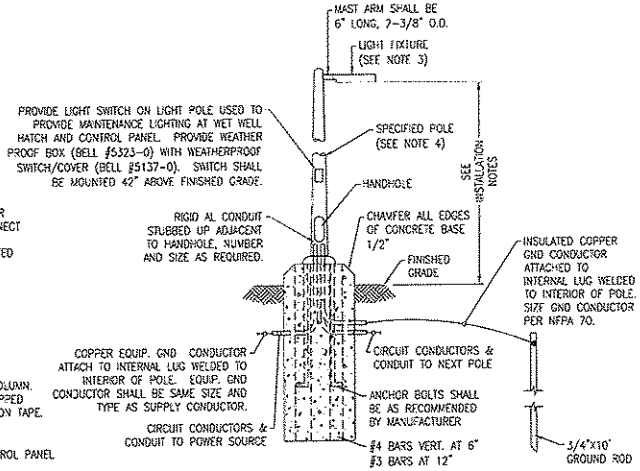

A4 LIGHT POLE INSTALLATION DETAIL
NOT TO SCALE

LIGHTING PERFORMANCE CRITERIA:
1. LIGHTING FIXTURE LAYOUT SHALL BE BASED UPON ACHIEVING 20 FOOT CANDLES (+/- 20%) AT THE FRONT OF THE CONTROL PANEL (WORK-PLANE OF 24" AFG) AND AT THE WET WELL ACCESS HATCH (WORKPLANE OF 0" AFG).
2. GENERAL SECURITY LIGHTING SHALL ENCOMPASS ACCESS GATE AND ALL PIPING/EQUIPMENT AT A MIN: AVERAGE 1 FOOT-CANDLE (+/- 20%, AT WORKPLANE OF 0" AFG).
3. REFER TO LIGHTING CONTROL DIAGRAM ON SHEET No. 18 FOR ADDITIONAL REQUIREMENTS.

LIGHT POLE INSTALLATION NOTES:
1. BURIAL AND DIAMETER DIMENSIONS INDICATED ARE FOR NOMINAL MINIMAL SIZES ONLY. FINAL DIMENSIONS SHALL BE DETERMINED BY A REGISTERED STRUCTURAL ENGINEER IN THE STATE OF FLORIDA. BASED UPON FIXTURES PROVIDED. PROVIDE SIGNED, DATED, AND SEALED PLANS FOR EACH INSTALLATION TYPE AND FIXTURE TYPE AS PART OF LIGHTING SUBMITTAL PACKAGE.
2. THE POLE AND FOUNDATION DESIGN SHALL BE BY A DELEGATED PROFESSIONAL ENGINEER TO MEET THE FOLLOWING CRITERIA:
   2.1. DESIGN WIND SPEED 160 MPH WITH A 1.3 GUST FACTOR. EXPOSURE CATEGORY C.
   2.2. SIZE EMBEDMENT FOR A MAXIMUM PERMANENT POLE DEFLECTION AFTER DESIGN WIND SPEED EVENT OF 1.00".
   2.3. ALUMINUM, ROUND OR SQUARE, TAPERED.
3. FIXTURE SHALL BE AMERICAN ELECTRIC LIGHTING ATB2 FIXTURE, 40 LED, 1000mA DRIVER, 120V, TYPE 4, WITH PHOTOCONTROL.
4. REFER TO SPECIFICATIONS SECTION 16521 "EXTERIOR LIGHTING" FOR ADDITIONAL REQUIREMENTS.
5. LIGHT FIXTURES SHALL BE MOUNTED AT 15'-0" (MAXIMUM) ABOVE FINISHED GRADE.

REVISIONS	BY

IMPROVEMENTS TO WASTEWATER COLLECTION SYSTEM
LIFT STATION CONSTRUCTION DETAILS
ELECTRICAL STANDARDS
FINAL SUBMITTAL

EMERALD COAST UTILITIES AUTHORITY

APPROVED BY:

Drawn:
Designed:
Checked:
Date: MAY '13
Scale:
Project No:
Sheet No. 17
OF 18 Sheets

ALL WORK SHALL BE CONSTRUCTED IN ACCORDANCE WITH THE LATEST EDITION OF THE E.C.U.A. STANDARD SPECIFICATIONS

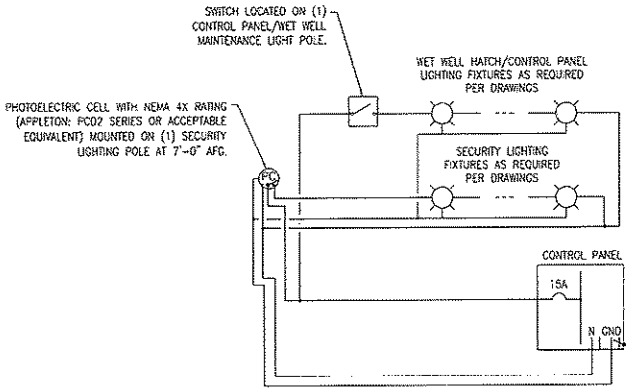

C2 TYPICAL LIGHTING CONTROL DIAGRAM
NOT TO SCALE

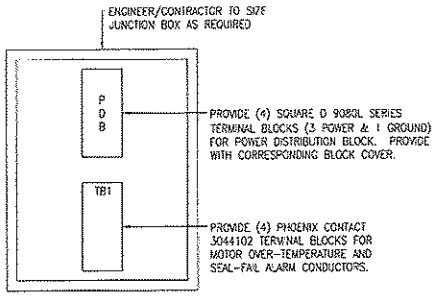

INTERIOR ELEVATION

DETAIL NOTES:

1. ALL TERMINAL BLOCKS SHALL BE PROVIDED WITH CORRESPONDING END BRACKETS AND END COVERS.
2. PROVIDE SEPARATE GROUND LUG IN EACH JUNCTION BOX, BONDED TO JUNCTION BOX.

A1 TYPICAL PUMP JUNCTION BOX ELEVATION
NOT TO SCALE

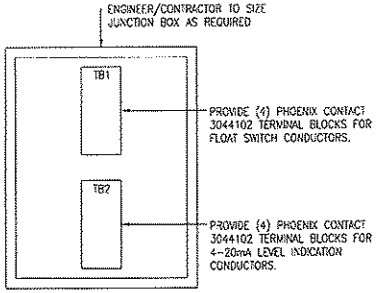

INTERIOR ELEVATION

DETAIL NOTES:

1. ALL TERMINAL BLOCKS SHALL BE PROVIDED WITH CORRESPONDING END BRACKETS AND END COVERS.
2. PROVIDE SEPARATE GROUND LUG IN EACH JUNCTION BOX, BONDED TO JUNCTION BOX.

A3 TYPICAL LEVEL INDICATION JUNCTION BOX ELEVATION
NOT TO SCALE

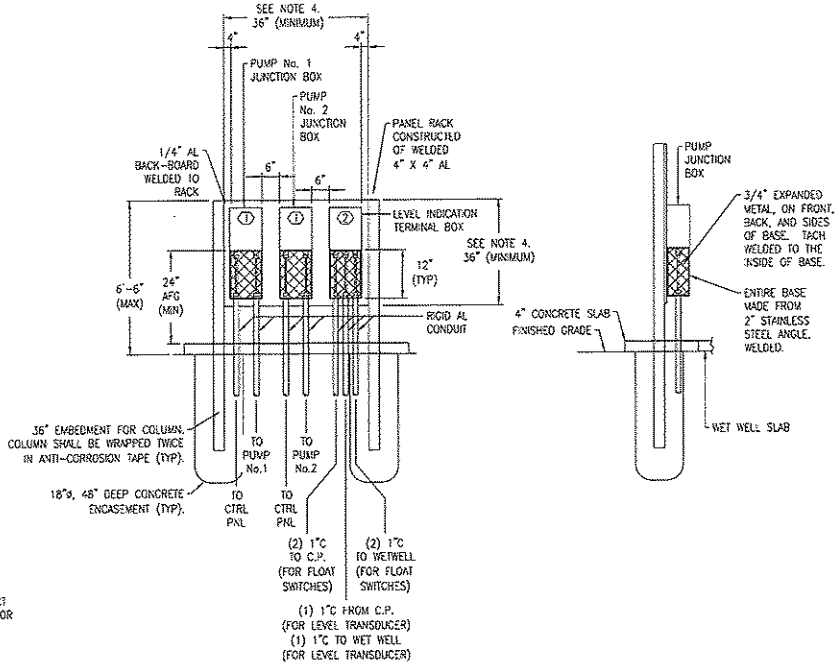

FRONT ELEVATION

SIDE ELEVATION

DETAIL NOTES:

1. THIS DETAIL SHALL ONLY APPLY WHEN THE CONTROL PANEL CANNOT BE PLACED WITHIN 6'-0" OF THE WET WELL TO ALLOW FOR CONNECTION OF STANDARD 50 FOOT PUMP CABLE CONNECTIONS.
2. BACKBOARD SHALL BE PLACED AT THE EDGE OF THE WET WELL SLAB BETWEEN THE WET WELL AND CONTROL PANEL.
3. JUNCTION BOXES SHALL BE MOUNTED SUCH THAT THEY ARE FACING THE WET WELL.
4. ENGINEER/CONTRACTOR SHALL SIZE JUNCTION BOXES AND BACKBOARDS BASED UPON INSTALLATION REQUIREMENTS PROVIDED AT TIME OF DESIGN.

KEY NOTES

① REFER TO "TYPICAL PUMP JUNCTION BOX ELEVATION" (THIS SHEET) FOR ADDITIONAL REQUIREMENTS.

② REFER TO "TYPICAL LEVEL INDICATION JUNCTION BOX ELEVATION" (THIS SHEET) FOR ADDITIONAL REQUIREMENTS.

A4 TYPICAL PUMP JUNCTION BOXES
NOT TO SCALE

REVISIONS	BY

IMPROVEMENTS TO WASTEWATER COLLECTION SYSTEM

LIFT STATION CONSTRUCTION DETAILS

ELECTRICAL STANDARDS

FINAL SUBMITTAL

EMERALD COAST UTILITIES AUTHORITY

APPROVED BY:

Drawn:	
Designed:	
Checked:	
Date:	MAY '13
Scale:	
Project No:	
Sheet No.	18
	OF 18 Sheets

ALL WORK SHALL BE CONSTRUCTED IN ACCORDANCE WITH THE LATEST EDITION OF THE E.C.U.A. STANDARD SPECIFICATIONS

480V 3ø 1HP – 60HP VARIABLE FREQUENCY DRIVE ELECTRICAL STANDARD – ALTERNATE

FOR

EMERALD COAST UTILITY AUTHORITY
ESCAMBIA COUNTY, FL

SHEET NO.	SHEET DESCRIPTION
1	MAIN POWER DISTRIBUTION SCHEMATIC
2	CONTROL SCHEMATIC
3	DIGITAL INPUTS SCHEMATIC
4	DIGITAL OUTPUTS & ANALOG INPUTS SCHEMATIC
5	ANALOG OUTPUTS & STARTER CONTROL SCHEMATIC
6	TERMINAL BLOCK LAYOUT AND FIELD CONNECTIONS
7A	BACK-TO-BACK EXTERIOR PANEL LAYOUT & FIELD CONDUIT REQUIREMENTS
8	POWER & PUMP 1 INTERNAL PANEL LAYOUTS
9	PUMP 2 & CONTROL PANEL INTERNAL LAYOUTS
10	EQUIPMENT LIST
11	HORSEPOWER RELATED EQUIPMENT & POWER CONDUCTORS
12	PANEL TO PANEL CONDUCTORS & EQUIPMENT
13	PANEL TO PANEL WIRING
14A	BACK-TO-BACK STAINLESS STEEL FRAME LAYOUT
15	TABLES, LEGENDS & TAGS
16	ISR INSTRUCTIONS
17	GENERAL NOTES AND DETAILS
18	GENERAL NOTES AND DETAILS

REVISIONS	BY

IMPROVEMENTS TO WASTEWATER COLLECTION SYSTEM

LIFT STATION CONSTRUCTION DETAILS

ELECTRICAL STANDARDS

FINAL SUBMITTAL

ECUA

EMERALD COAST UTILITIES AUTHORITY

APPROVED BY:

Drawn:
Designed:
Checked:
Date: MAY '13
Scale:
Project No:
Sheet No. 0
Of 18 Sheets

ALL WORK SHALL BE CONSTRUCTED IN ACCORDANCE WITH THE LATEST EDITION OF THE E.C.U.A. STANDARD SPECIFICATIONS

VOLTS	PHASE	FREQ	FLA
480	3	60	XXX
LARGEST MOTOR			
VOLTS	PHASE	FREQ	FLA / HP
480	3	60	XXX / XX
SHORT CIRCUIT CURRENT: 10kA RMS SYMMETRICAL. 480VAC MAXIMUM			

*FOR NAMEPLATE DATA FOR EACH HORSEPOWER RATING SEE SHEET 15 'NAMEPLATE DATA' TABLE

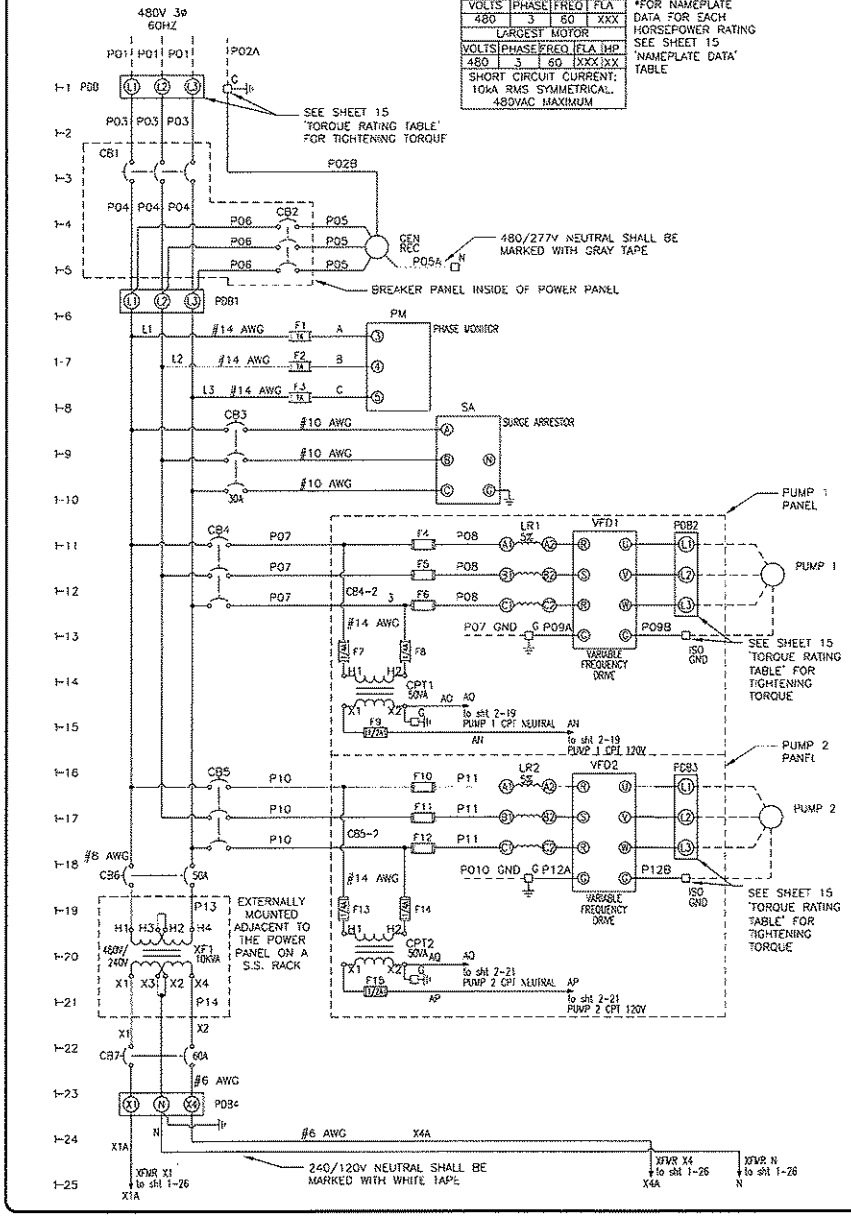

NOTES:

1. THE COMPLETED CONTROL PANEL SHALL BE LABELED AND MANUFACTURED TO MEET U.L. 508A AND 698A CERTIFICATION.
2. CONTROL PANEL WIRING SHALL BE STRANDED COPPER, MINIMUM SIZE #16 AWG WITH 600V 90DEGREE C TYPE THHN INSULATION.
3. CONTROL PANEL WIRING SHALL BE NUMBERED AT BOTH ENDS WITH TYPE WRITTEN, HEAT SHRINKABLE WIRE MARKERS.
4. ALL WIRING WITHIN THE CONTROL PANEL SHALL BE COLOR CODED OR CODED USING ELECTRICAL TAPE IN SIZES WHERE COLORED INSULATION IS NOT AVAILABLE. THE FOLLOWING CODING SHALL BE USED:
   - 4.1. UNGROUNDED AC CONDUCTORS AT SUPPLY VOLTAGE – BLACK
   - 4.2. GROUNDED AC CURRENT CARRYING CONDUCTORS – WHITE
   - 4.3. UNGROUNDED AC CONDUCTORS BELOW SUPPLY VOLTAGE – RED
   - 4.4. UNGROUNDED AC CONTROL CONDUCTORS & CONDUCTORS THAT REMAIN ENERGIZED WHEN THE MAIN DISCONNECT IS OFF – YELLOW
   - 4.5. UNGROUNDED DC CONTROL CONDUCTORS – ORANGE
   - 4.6. GROUNDED DC CURRENT CARRYING CONDUCTORS – BROWN
   - 4.7. INTRINSICALLY SAFE WIRING – BLUE
   - 4.8. GROUND CONDUCTORS – GREEN
5. SEE SHEETS 11 & 12 FOR DETAILS REGARDING ALL POWER CONDUCTORS LABELED PXX.
6. SEE SHEET 17 'HORSEPOWER RELATED COMPONENTS EQUIPMENT LIST' FOR RATINGS OF OVERCURRENT PROTECTION DEVICES.
7. SEE SHEET 6 FOR TERMINAL BLOCK DESIGNATIONS AND DESCRIPTIONS.

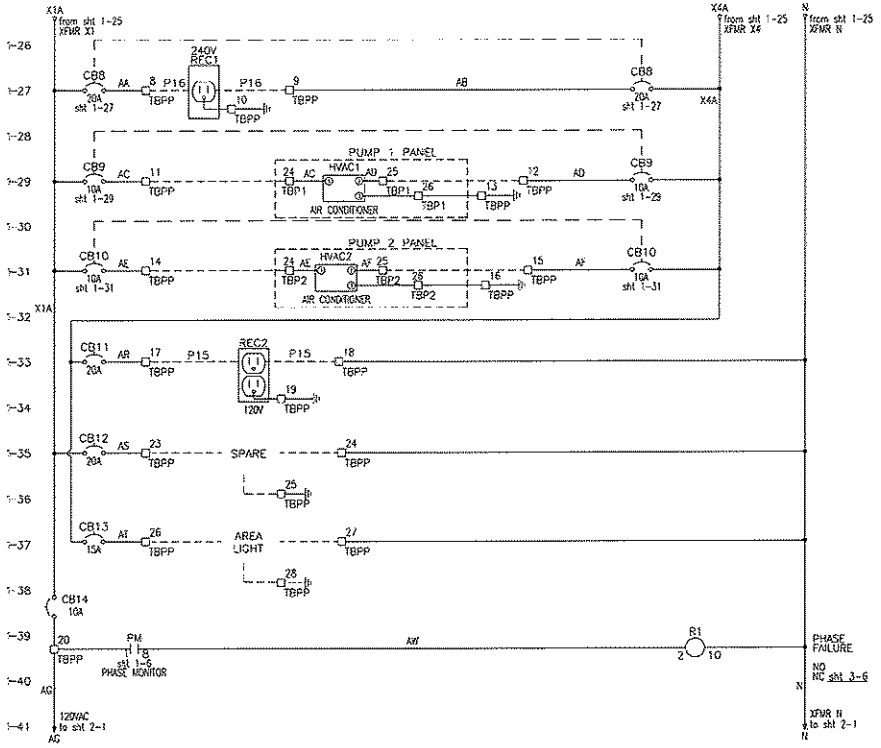

REVISIONS	BY

IMPROVEMENTS TO WASTEWATER COLLECTION SYSTEM

LIFT STATION CONSTRUCTION DETAILS

ELECTRICAL STANDARDS

FINAL SUBMITTAL

EMERALD COAST UTILITIES AUTHORITY

APPROVED BY:

Drawn:
Designed:
Checked:
Date: MAY '13
Scale:
Project No.:
Sheet No. 1
Of 18 Sheets

ALL WORK SHALL BE CONSTRUCTED IN ACCORDANCE WITH THE LATEST EDITION OF THE E.C.U.A. STANDARD SPECIFICATIONS

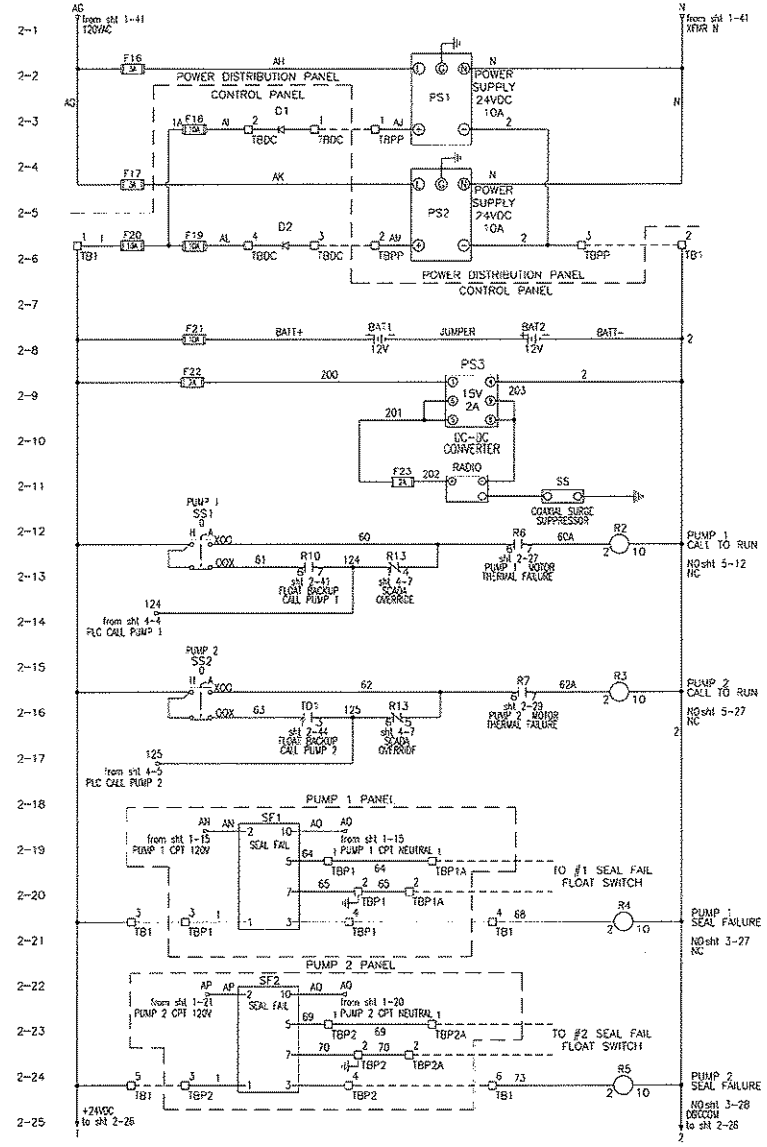

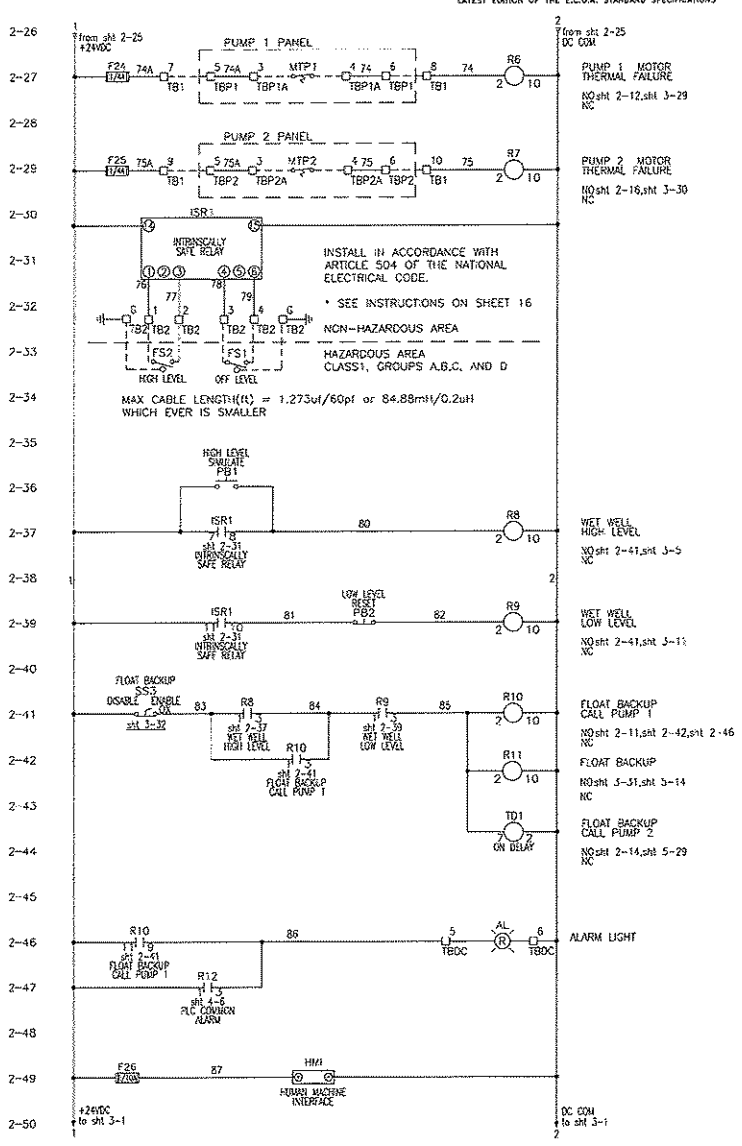

REVISIONS	BY

IMPROVEMENTS TO WASTEWATER COLLECTION SYSTEM

LIFT STATION CONSTRUCTION DETAILS

ELECTRICAL STANDARDS

FINAL SUBMITTAL

EMERALD COAST UTILITIES AUTHORITY

APPROVED BY:

Drawn	
Designed	
Checked	
Date	MAY '13
Scale	
Project No	
Sheet No.	2
	OF 18 Sheets

ALL WORK SHALL BE CONSTRUCTED IN ACCORDANCE WITH THE LATEST EDITION OF THE E.C.U.A. STANDARD SPECIFICATIONS

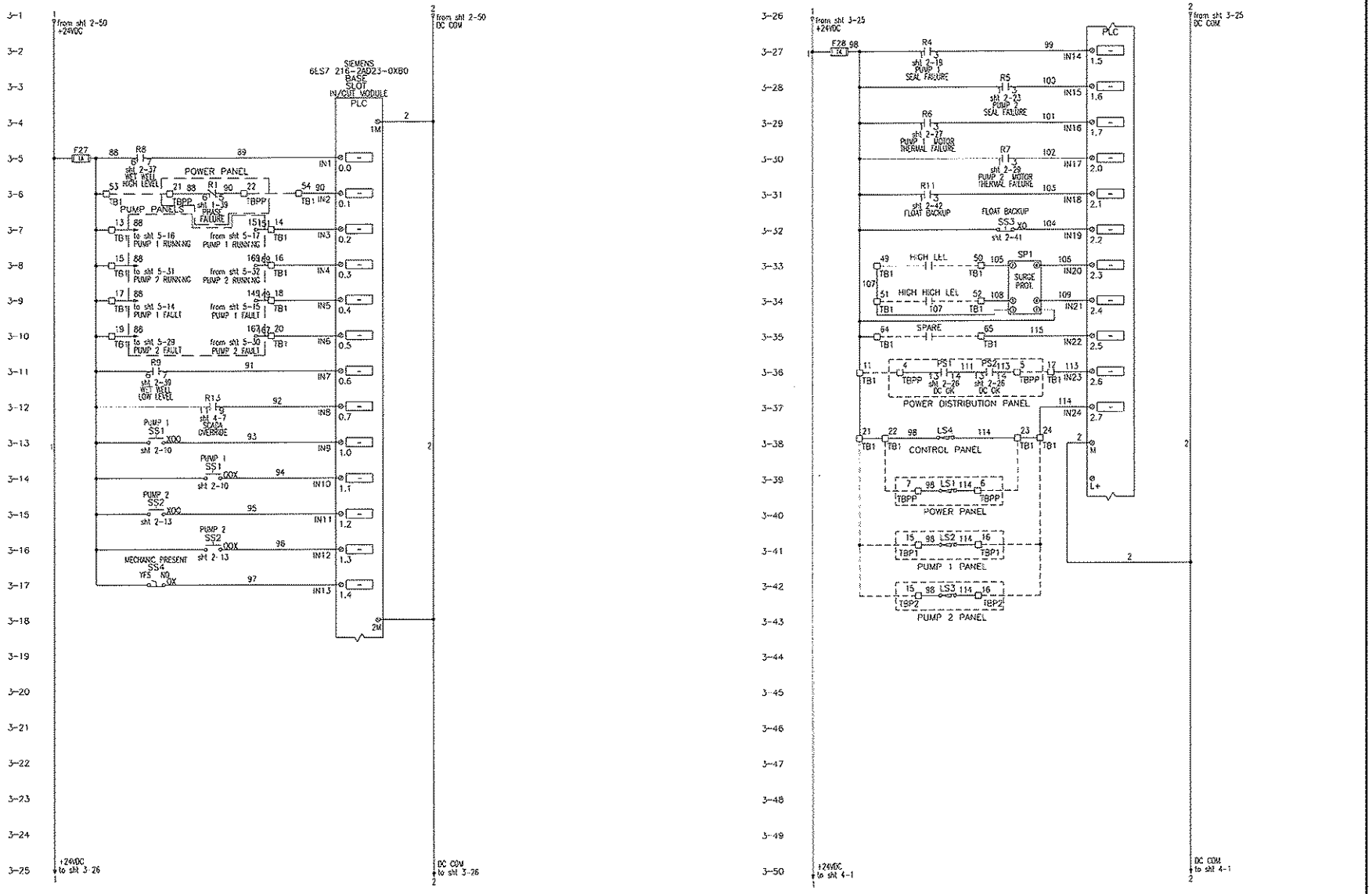

REVISIONS	BY

IMPROVEMENTS TO WASTEWATER COLLECTION SYSTEM

LIFT STATION CONSTRUCTION DETAILS

ELECTRICAL STANDARDS

FINAL SUBMITTAL

EMERALD COAST UTILITIES AUTHORITY

APPROVED BY:

Drawn:	
Designed:	
Checked:	
Date:	MAY '13
Scale:	
Project No:	
Sheet No.	3
	OF 18 Sheets

ALL WORK SHALL BE CONSTRUCTED IN ACCORDANCE WITH THE LATEST EDITION OF THE E.C.U.A. STANDARD SPECIFICATIONS

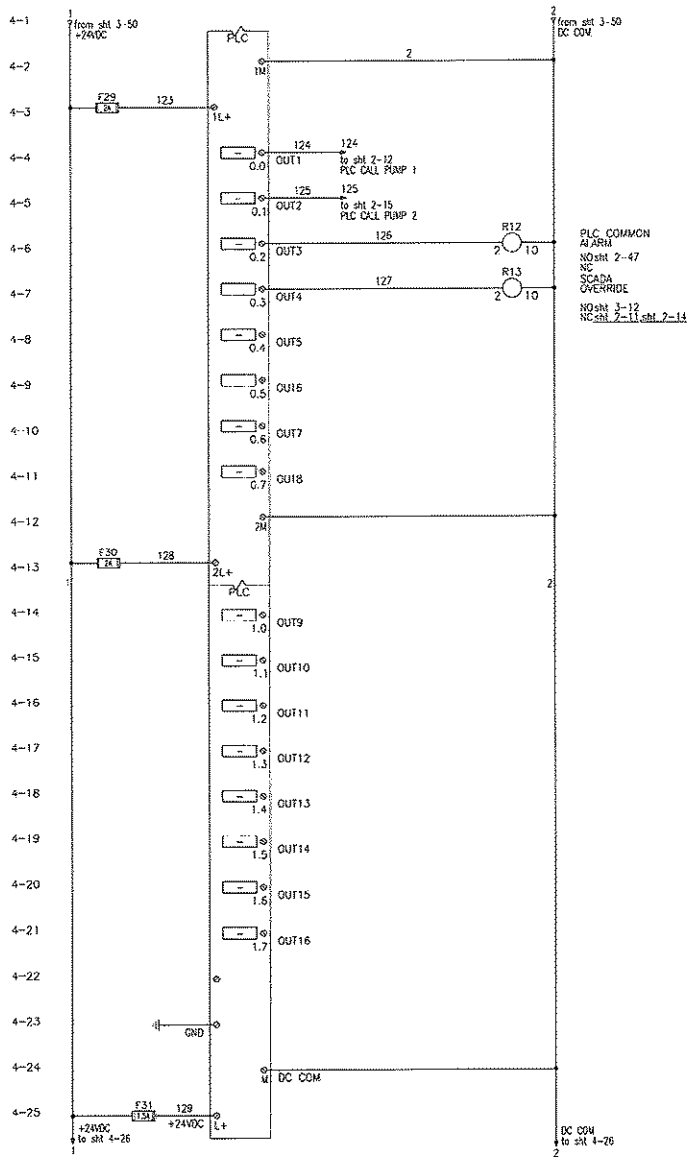

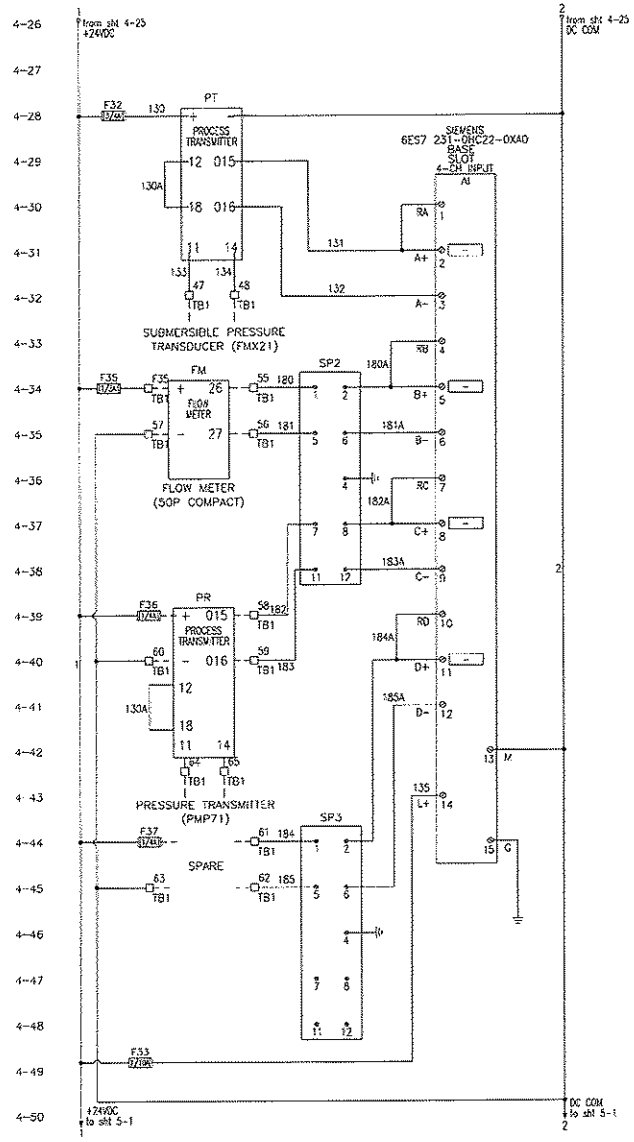

REVISIONS	BY

IMPROVEMENTS TO WASTEWATER COLLECTION SYSTEM

LIFT STATION CONSTRUCTION DETAILS

ELECTRICAL STANDARDS

FINAL SUBMITTAL

EMERALD COAST UTILITIES AUTHORITY

APPROVED BY:

Drawn:	
Designed:	
Checked:	
Date:	MAY '13
Scale:	
Project No:	
Sheet No.	4
OF	18 Sheets

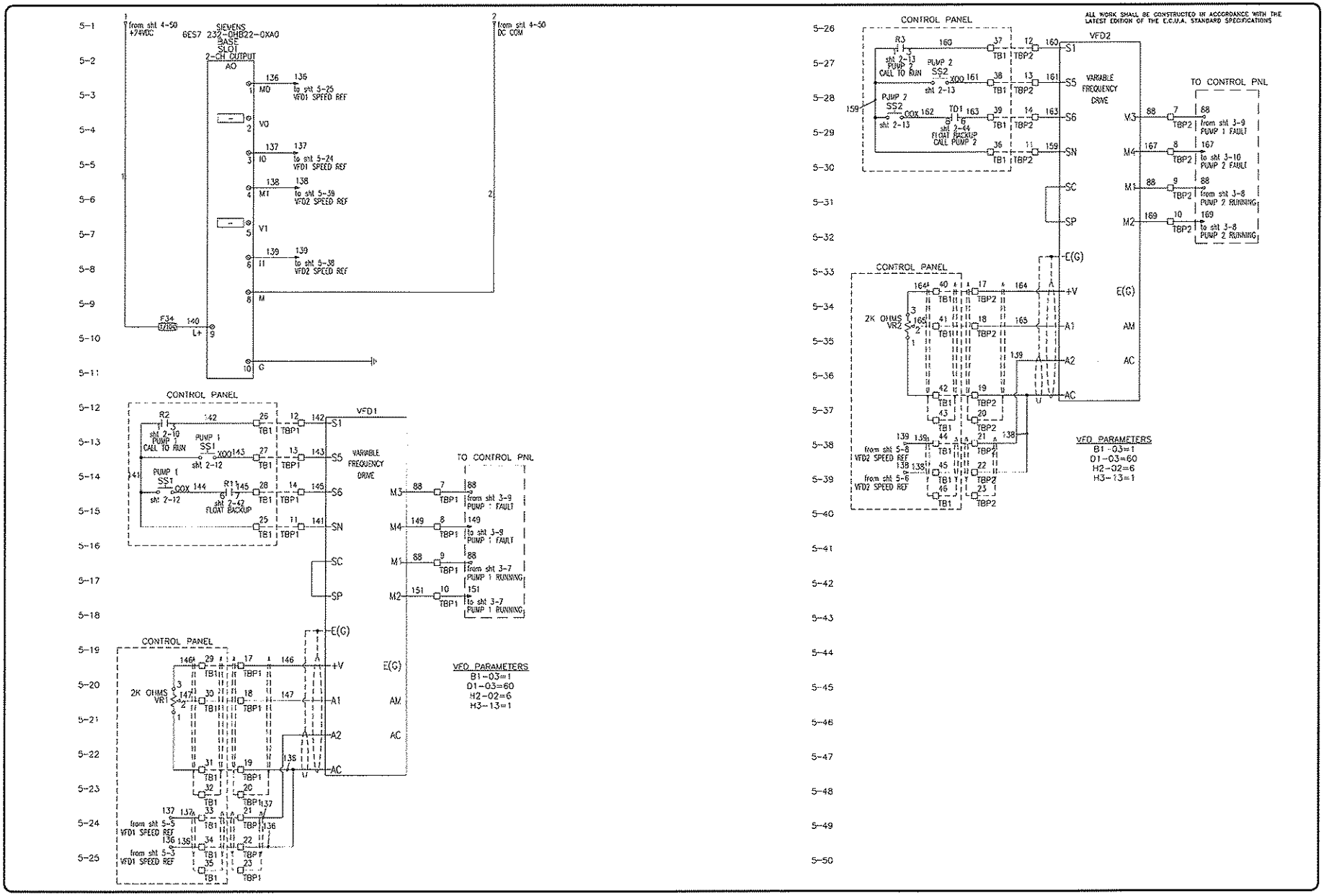

REVISIONS	BY

IMPROVEMENTS TO WASTEWATER COLLECTION SYSTEM

LIFT STATION CONSTRUCTION DETAILS

ELECTRICAL STANDARDS

FINAL SUBMITTAL

EMERALD COAST UTILITIES AUTHORITY

APPROVED BY:

Drawn	
Designed	
Checked	
Date	MAY '13
Scale	
Project No.	
Sheet No.	5
	Of 18 Sheets

ALL WORK SHALL BE CONSTRUCTED IN ACCORDANCE WITH THE LATEST EDITION OF THE E.C.U.A. STANDARD SPECIFICATIONS

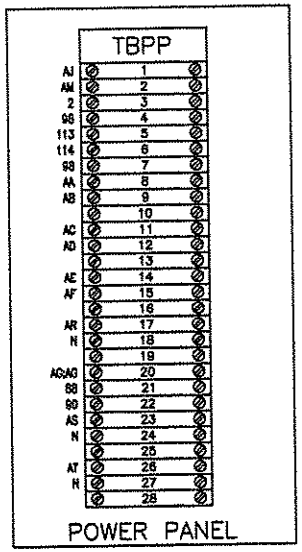

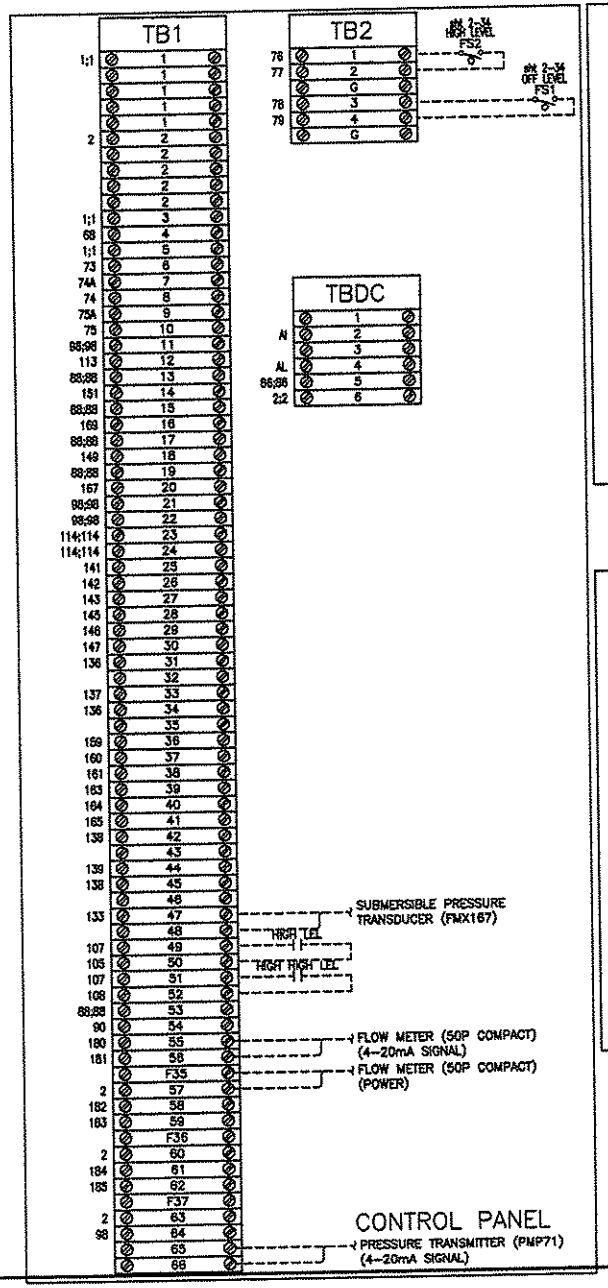

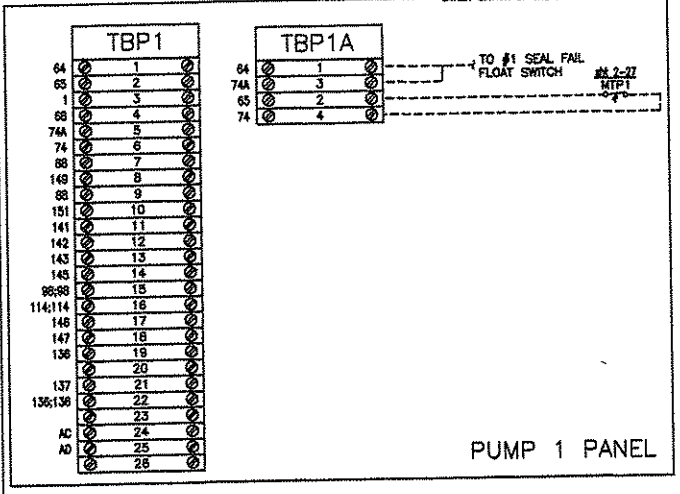

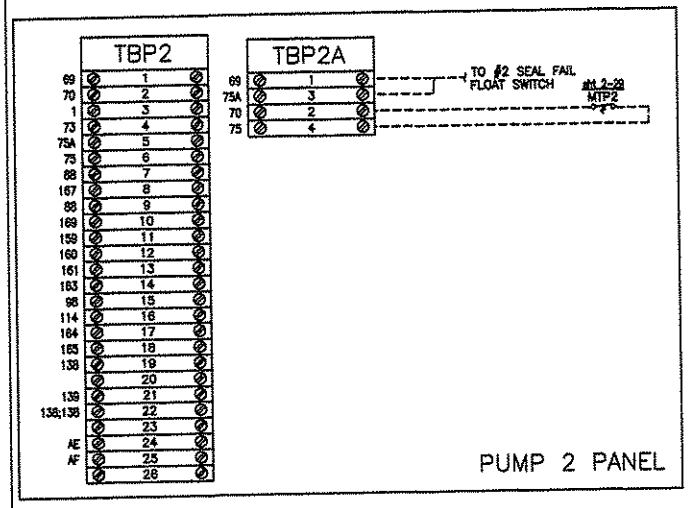

TYPICAL FOR ALL TERMINAL BLOCKS ON THIS DRAWING

USE COPPER CONDUCTORS ONLY
75 DEG C (167 DEG F)
5.3-7.0 LB/IN TIGHTENING TORQUE

NOTES:

TERMINAL BLOCK DESIGNATIONS:

- TBPP – POWER PANEL TERMINAL BLOCK
- TB1 – CONTROL PANEL TERMINAL BLOCK
- TB2 – INTRINSICALLY SAFE TERMINAL BLOCK
- TBP1 – PUMP 1 TERMINAL BLOCK
- TBP1A – PUMP 1 TERMINAL BLOCK (MOTOR THERMAL AND SEAL FAILURE)
- TBP2 – PUMP 2 TERMINAL BLOCK
- TBP2A – PUMP 2 TERMINAL BLOCK (MOTOR THERMAL AND SEAL FAILURE)

REVISIONS	BY

IMPROVEMENTS TO WASTEWATER COLLECTION SYSTEM

LIFT STATION CONSTRUCTION DETAILS

ELECTRICAL STANDARDS

FINAL SUBMITTAL

EMERALD COAST UTILITIES AUTHORITY

APPROVED BY:

Drawn	
Designed	
Checked	
Date	MAY '13
Scale	
Project No.	
Sheet No.	6
	OF 16 Sheets

ALL WORK SHALL BE CONSTRUCTED IN ACCORDANCE WITH THE LATEST EDITION OF THE E.C.U.A. STANDARD SPECIFICATIONS

NOTES

1. SEE SHEET 15 FOR SCHEDULES, LEGENDS AND PANEL TAGS.

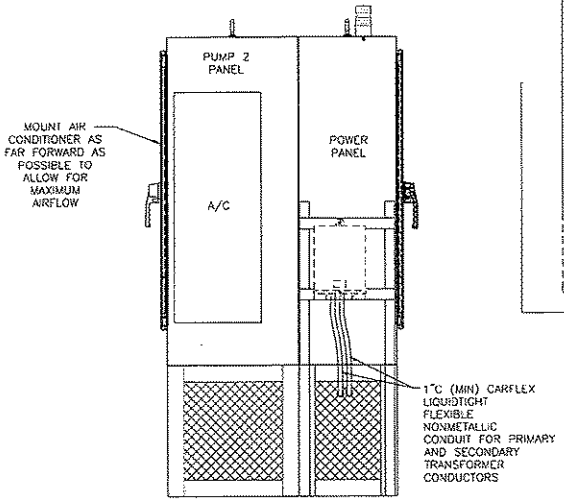

LEFT SIDE

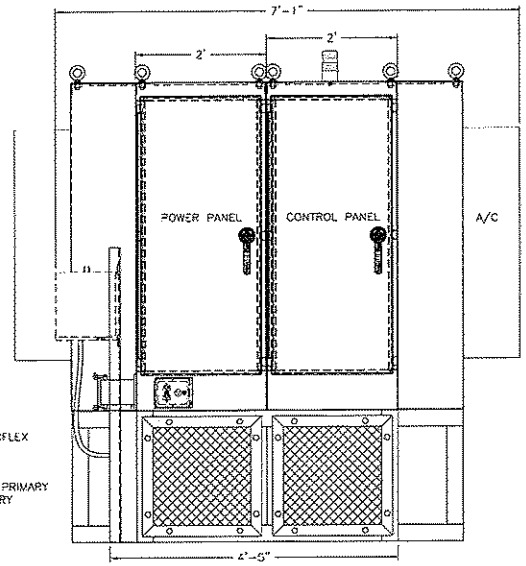

FRONT

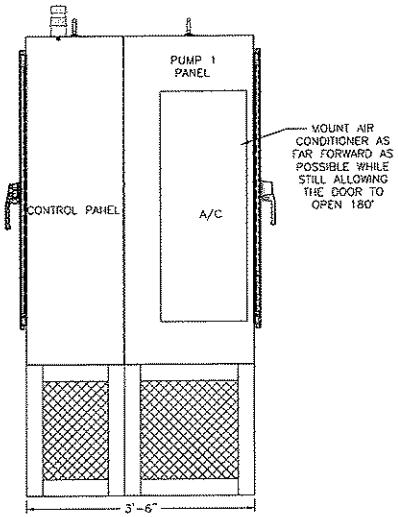

RIGHT SIDE

ATTENTION

THIS LAYOUT IS ONE OF TWO (2) POSSIBLE CHOICES - SEE SHEET 7 FOR THE OTHER OPTION. IF THIS LAYOUT OPTION IS SELECTED, SEE SHEET 14A FOR ASSOCIATED RACK DETAILS.

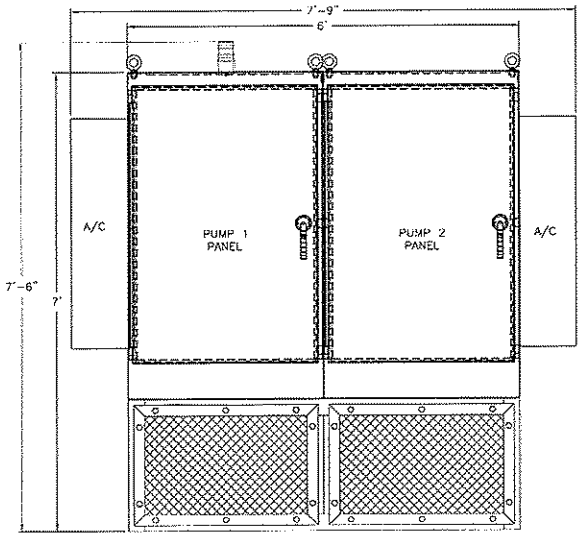

BACK

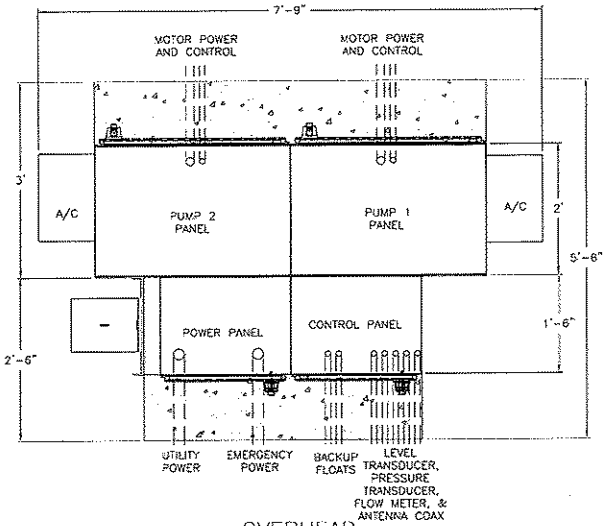

OVERHEAD

REVISIONS	BY

IMPROVEMENTS TO WASTEWATER COLLECTION SYSTEM

LIFT STATION CONSTRUCTION DETAILS

ELECTRICAL STANDARDS

FINAL SUBMITTAL

EMERALD COAST UTILITIES AUTHORITY

APPROVED BY:

Drawn:	
Designed:	
Checked:	
Date:	MAY '13
Scale:	
Project No:	
Sheet No.	7A
Of 18 Sheets	

ALL WORK SHALL BE CONSTRUCTED IN ACCORDANCE WITH THE LATEST EDITION OF THE E.C.U.A. STANDARD SPECIFICATIONS

NOTES

1. SEE SHEET 15 FOR SCHEDULES, LEGENDS AND PANEL TAGS.
2. LAYOUT OF THE POWER & VFD SECTIONS DEPICTS THE LARGEST POSSIBLE HORSEPOWER CONFIGURATION.

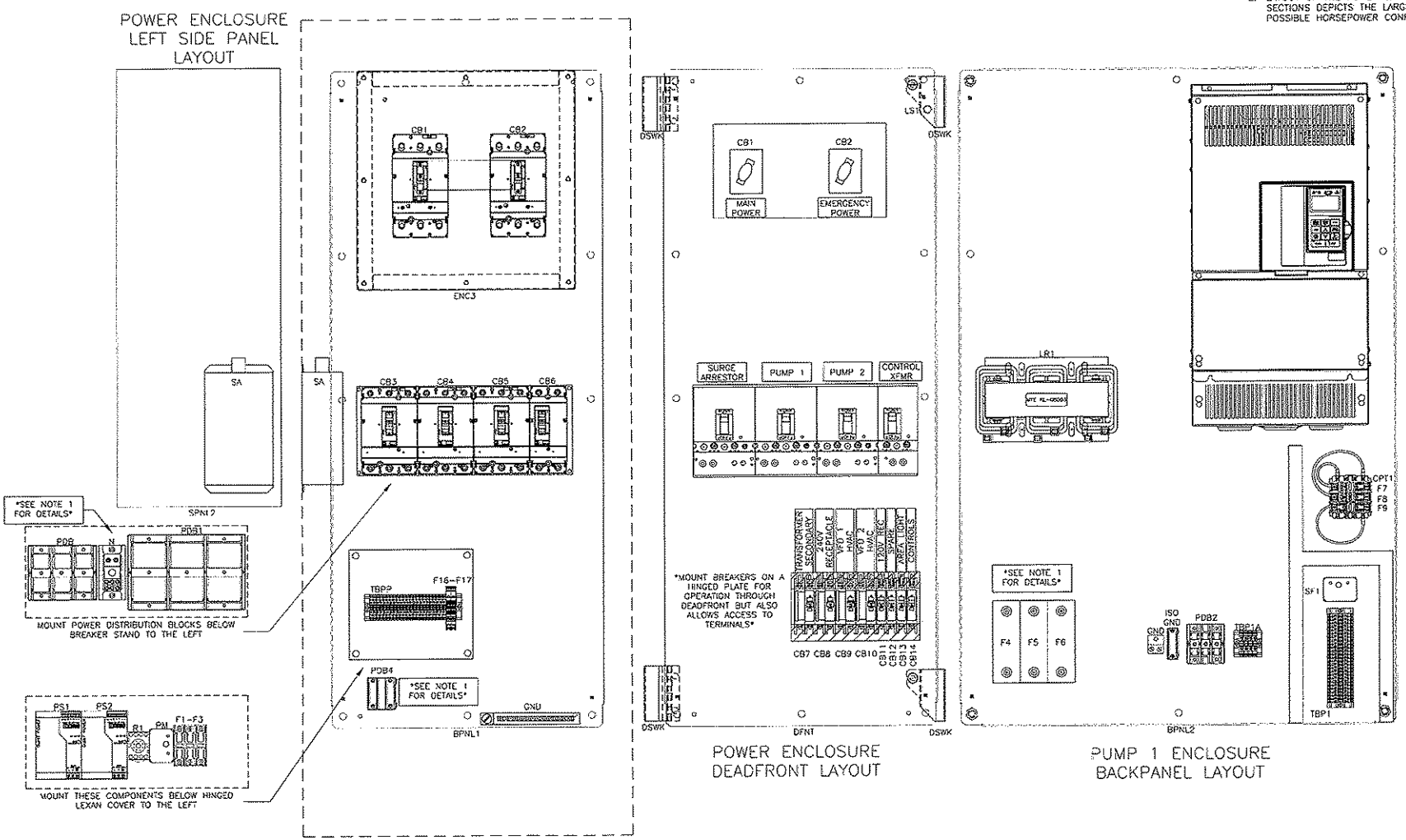

REVISIONS	BY

IMPROVEMENTS TO WASTEWATER COLLECTION SYSTEM

LIFT STATION CONSTRUCTION DETAILS

ELECTRICAL STANDARDS

FINAL SUBMITTAL

ECUA
EMERALD COAST UTILITIES AUTHORITY

APPROVED BY:

Drawn:	
Designed:	
Checked:	
Date:	MAY '13
Scale:	
Project No:	
Sheet No.	8
	OF 18 Sheets

ALL WORK SHALL BE CONSTRUCTED IN ACCORDANCE WITH THE LATEST EDITION OF THE E.C.U.A. STANDARD SPECIFICATIONS

NOTES

1. SEE SHEET 15 FOR SCHEDULES, LEGENDS AND PANEL TAGS.
2. LAYOUT OF THE VFD SECTION DEPICTS THE LARGEST POSSIBLE HORSEPOWER CONFIGURATION.

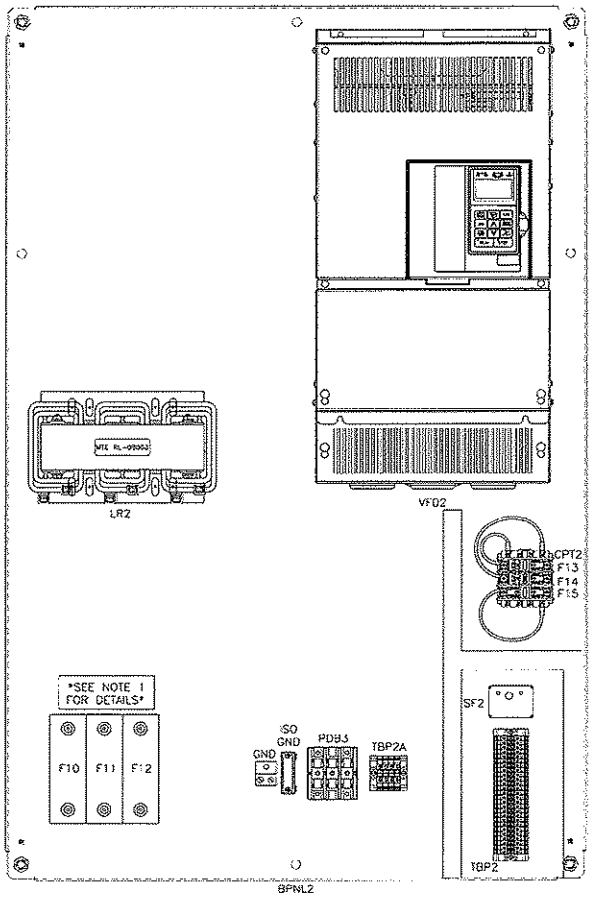

PUMP 2 ENCLOSURE BACKPANEL LAYOUT

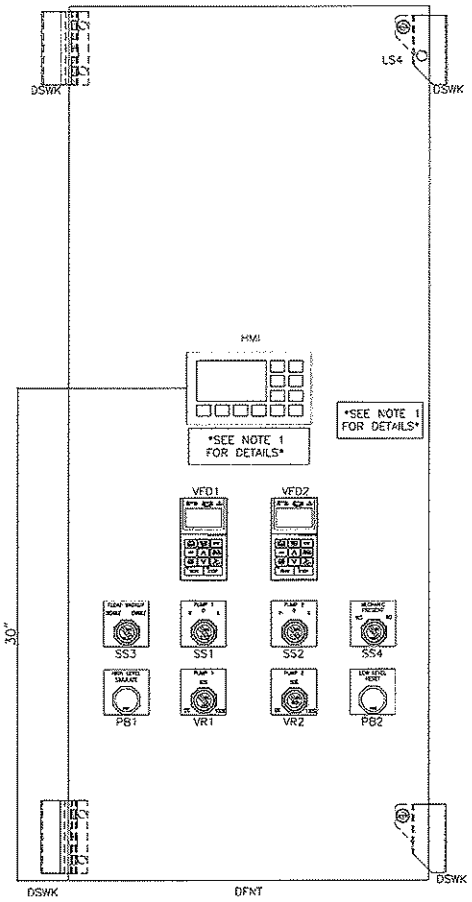

CONTROL PANEL DEADFRONT LAYOUT

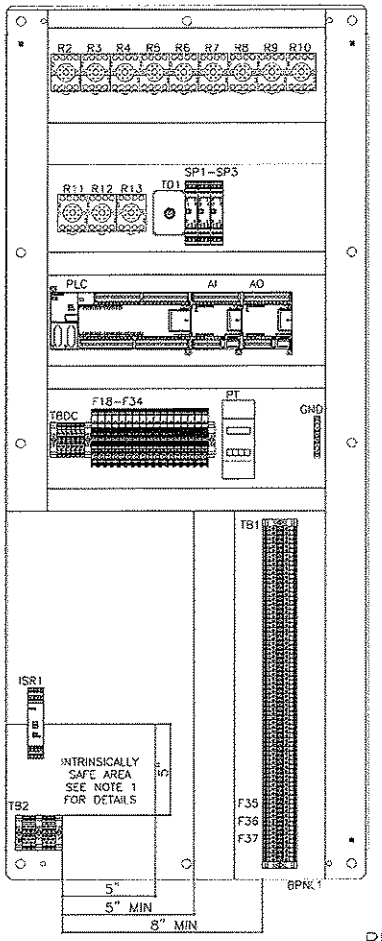

CONTROL ENCLOSURE BACKPANEL LAYOUT

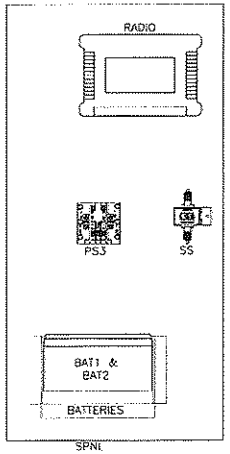

CONTROL ENCLOSURE RIGHT SIDEPANEL LAYOUT

REVISIONS	BY

IMPROVEMENTS TO WASTEWATER COLLECTION SYSTEM

LIFT STATION CONSTRUCTION DETAILS

ELECTRICAL STANDARDS

FINAL SUBMITTAL

EMERALD COAST UTILITIES AUTHORITY

APPROVED BY:

Drawn:
Designed:
Checked:
Date: MAY '13
Scale:
Project No:
Sheet No. 9
OF 18 Sheets

480V VFD Equipment List

Item	Tag	Panel	Description	Manufacturer	Model	Qty
1	ENC1	Power & Control	60X24X18 NEMA 4X SS Enclosure	Hoffman	A60241855FSN4	2
2	BPNL1	Power & Control	60x24 Painted Steel Backpanel	Hoffman	A60P24F1	2
3	ENC2	Pump 1 & 2	60X36X24 NEMA 4X SS Enclosure	Hoffman	A60362455FSN4	2
4	BPNL2	Pump 1 & 2	60x36 Painted Steel Backpanel	Hoffman	A60P36F1	2
5	SPNL	Control	28"H x 12"W Aluminum Sidepanel	EWS	Custom	1
6	DFNT	Power & Control	60x24 Aluminum Deadfront Panel	EWS	Custom	2
7	DSWK	Power & Control	Door Swing Kit	Hoffman	ANAOFK	2
8	FRM	All	Expanded Metal Stainless Steel Frame	EWS	See Drawings	1
9	PDB	Power	Incoming Power Distribution Block PDB	Square D	SEE HP TABLE SHEET 11	1
10	PDB	Power	Incoming Power Distribution Block PDB Cover	Square D	SEE HP TABLE SHEET 11	1
11	GND	Power	Power Panel Ground Bar	Square D	PK15GTA-L	1
12	ENC3	Power	16"H x 16"W x 8"D Screw Cover Type 3R Enclosure	Hoffman	A16168SSC	1
13	CB1	Power	600V Main Circuit Breaker	Square D	SEE HP TABLE SHEET 11	1
14	CB2	Power	600V Emergency Circuit Breaker	Square D	SEE HP TABLE SHEET 11	1
15	CB1,CB2	Power	Mechanical Interlock for H/J Frame Circuit Breakers	Square D	529369	1
16	CB1,CB2	Power	Door Mounted Rotary Handle for H/J Frame Circuit Breakers	Square D	529338	2
17	GEN REC	Power	NEMA 4X Generator Receptacle	Appleton	SEE HP TABLE SHEET 11	1
18	GEN REC	Power	NEMA 4X Generator Plug (Ship Loose)	Appleton	SEE HP TABLE SHEET 11	1
19	PDB1	Power	Main Power Distribution Block	Square D	SEE HP TABLE SHEET 11	1
20	PDB1	Power	Main Power Distribution Block Cover	Square D	SEE HP TABLE SHEET 11	1
21	F1-F3	Power	3 Pole Rejection type Fuse Block	Bussmann	BC6033PQ	1
22	F1-F3	Power	1A Rejection Type Fuse, Class CC	Bussmann	KTK-R-1	3
23	F1-F3	Power	Fuse Cover	Bussmann	SAMI-7N	3
24	PM	Power	480V Phase Monitor	Timemark	A257B	1
25	PM	Power	480V, 8-Pin Relay Base	ABB	OT08PC	1
26	CB3-CB6	Power	Breaker Stand	EWS	Custom	1
27	CB3	Power	30A 480V 3 Pole Circuit Breaker, Main Surge Arrestor	Square D	HDL36030	1
28	SA	Power	Main Surge Arrestor	SSI	SOLA5N4	1
29	CB4, CB5	Power	600V 3 Pole Circuit Breaker, VFD	Square D	SEE HP TABLE SHEET 11	2
30	CB4,CB5	Power	H & J Frame Circuit Breaker Locking System	Square D	529371	2
31	F4-F6, F10-F12	Pump 1 & 2	Semiconductor Fuse	Ferraz Shawmut	SEE HP TABLE SHEET 11	6
32	F4-F6, F10-F12	Pump 1 & 2	Semiconductor Fuse Block	Ferraz Shawmut	SEE HP TABLE SHEET 11	6
33	LR1, LR2	Pump 1 & 2	5% Line Reactor	MTE	SEE HP TABLE SHEET 11	2
34	VFD1, VFD2	Pump 1 & 2	480V Variable Frequency Drive	Yaskawa	SEE HP TABLE SHEET 11	2
35	VFD1, VFD2	Control	Remote Operator Kit for Yaskawa P7 VFD	Yaskawa	UUX000444	2
36	GND	Pump 1 & 2	Power Panel to Starter Panels Ground	NSI	2-0T	2
37	PDB2, PDB3	Pump 1 & 2	Motor Power Distribution Block, (1)#14-2/0.....(1)#14-2/0	Square D	9080LBA362101	2
38	PDB2, PDB3	Pump 1 & 2	Motor Power Distribution Block Cover	Square D	9080LB23	2
39	F7, F8, F13, F14	Pump 1 & 2	1/4A Rejection Type Fuse, VFD CPT Primary	Bussmann	FNQ-R-1/4	4
40	CPT1, CPT2	Pump 1 & 2	480/120V 50VA Transformer	Square D	9070TF50D1	2
41	CPT1, CPT2	Pump 1 & 2	Transformer Finger Safe Cover, VFD CPT Primary	Square D	9070FSC-1	2
42	CPT1, CPT2	Pump 1 & 2	Fuse Puller, VFD CPT	Square D	9070FP-1	2
43	F9, F15	Pump 1 & 2	1/2A Fuse, VFD CPT Secondary	Bussmann	FNQ-1/2	2
44	CB6	Power	50A 480V 2 Pole Circuit Breaker, XF1 Transformer Primary	Square D	HDL26050	1
45	XF1	Power	10kVA 480V/240-120V Transformer, NEMA 3R Stainless Steel	Square D	10S1F5S	1
46	CB7-CB13	Power	Hinged Aluminum Bracket for Mounting 240/120V Circuit Breakers through Deadfront	EWS	Custom	1
47	CB7	Power	60A 240/120V 2 Pole Circuit Breaker, XF1 Transformer Secondary	Square D	QOU260	1
48	PDB4	Power	240V/120V Power Distribution Block PDB4, (1) #14-2 ... (4) #18-10	Square D	9080LBA361104	1
49	CB8	Power	20A, 240V, 2 Pole Circuit Breaker	Square D	QOU220	1
50	REC1	Power	20A, 250V, 6-20R Receptacle	P&S	5572I	1
51	CB9, CB10	Power	10A, 240V, 2 Pole Circuit Breaker	Square D	QOU210	2
52	HVAC1, HVAC2	Pump 1 & 2	240V NEMA 4X Air Conditioner *HVAC Selection based on HP size and Panel Layout*	Keqube	SEE HP TABLE SHEET 11	2
53	CB11, CB12	Power	20A, 120V 1 Pole Circuit Breaker	Square D	QOU120	2
54	REC2	Power	120V 20A GFCI Duplex Receptacle NEMA5-20R	P&S	2094-I	1
55	REC1, REC2	Power	Custom Receptacle Cover NEMA 4X S.S.	HOFFMAN	HIDRPSS-MOD	1
56	REC1, REC2	Power	3/4 1G AL FD BOX	Appelton	4CS-1/2	2
57	CB13	Power	15A, 120V, 1 Pole Circuit Breaker	Square D	QOU115	1
58	CB14	Power	10A, 120V, 1 Pole Circuit Breaker	Square D	QOU110	1
59	R1	Power	120V 3PDT General Purpose Relay w/ Indicator Lamp	Potter Brumfield	KRPA-14AN-120	1
60	R1-R13, SF1, SF2	All	11 Pin Relay Base	ABB	NO5-11	15
61	F16, F17	Power	Fused Terminal Block w/ 120V Blown Fuse Indication	Allen Bradley	1492-H4	2
62	-	Power & Control	1492-H4 &H5 Fused Terminal Block End Cover	Allen Bradley	1492-N57	2
63	F16, F17	Power	3A Fuse, Power Supply Primary	Bussmann	AGC-3	2
64	PS1, PS2	Power	10A 24VDC Power Supply	Phoenix Contact	2938604	2
65	D1, D2	Power	10A Diode, P1000A	Newark	51R7094	2
66	-	Control	Custom Stand/Lexan Hinged Cover w/Alum Stand for TBPP & Power Supply Fuses	EWS	Custom	1
67	F18-F37	Control	Fused Terminal Block w/ 24VDC Blown Fuse Indication	Allen Bradley	1492-H5	17
68	F18-F21	Control	10A Fuse, Power Supply Secondary & Batteries	Bussmann	AGC-10	4

480V VFD Equipment List

ALL WORK SHALL BE CONSTRUCTED IN ACCORDANCE WITH THE LATEST EDITION OF THE E.C.U. STANDARD SPECIFICATIONS

Item	Tag	Panel	Description	Manufacturer	Model	Qty
69	BAT1, BAT2	Control	12VDC Battery	Power Sonic	PS1290	2
70	PS3	Control	24VDC-15VDC Converter, 2A	Vicor	V1-J12-EY-B1	1
71	RADIO	Control	400MHz Radio	GE MDS	SD04MD	1
72	RADIO	Control	DB9 Male/Male Gender Changer	Office Depot	946660	1
73	RADIO/SS	Control	3 Foot LMR400UF Coaxial Jumper NMale to TNCMale	Tessco	324503	1
74	SS	Control	Coaxial Surge Suppressor, 50-700MHz	Polyphaser	IS-50NX-C1	1
75	-	Control	50FT Coaxial Cable, NMale-Nmale, Wireless Solutions 400-07-07-P50 (Ship Loose)	Tessco	370875	1
76	-	-	400MHz Yagi Antenna w/ N Female Connector, MAXRAD MYA4506N (Ship Loose)	Tessci	37634	1
77	-	-	Antenna Tower 5' Base Section, ROHN R-SB25G5 (Ship Loose)	Tessco	64559	1
78	-	-	Antenna Tower 10' Mid Section, ROHN R-25G (Ship Loose)	Tessco	56866	1
79	-	-	Antenna Tower 9' Top Section, ROHN R-25AG2 (Ship Loose)	Tessco	70080	1
80	-	-	21' 1-1/4" S.S. Antenna Mast (Ship Loose)	Bell Steel	023008	1
81	F24, F25	Control	1/4A Fuse	Bussmann	AGC-1/4	2
82	F22, F23, F29, F30	Control	2A Fuse	Bussmann	AGC-2	4
83	SS1, SS2	Control	3 Position Selector Switch, 30MM	Square D	9001SKS43BH2	2
84	R2-R12	Control	24VDC 3PDT General Purpose Relay w/ Indicator Lamp	Potter Brumfield	KRPA-14DN-24	12
85	SF1, SF2	Control	120V Seal Failure Relay	ATC	SPM-120-AAA-10K	2
86	ISR1	Control	Intrinsically Safe Barrier Relay, 24VDC	Pepperl & Fuchs	KF02-SR2-Ex2.W	1
87	TB2	Control	Terminal Block, Blue TB2	Phoenix Contact	3044115	4
88	TB2	Control	Terminal Block, Blue End Barrier, TB2	Phoenix Contact	3047235	1
89	TB2	Control	Ground Terminal Blocks, TB2	Phoenix Contact	3044126	2
90	PB1, PB2	Control	Push Button, Black 1NO 1NC	Square D	9001SKR18H13	2
91	SS3, SS4	Control	2 Position Selector Switch, 30MM	Square D	9001SK51BH2	2
92	TD1	Control	24VDC 0-180 Second Time Delay Relay	Square D	RE48ATM12MW	1
93	TD1	Control	8 Pin Relay Base	ABB	NO5-8	1
94	AL	Control	24VDC Red Alarm Light	Federal Signal	LP3M-012-048R	1
95	F26, F33, F34	Control	1/10A Fuse	Bussmann	AGC-1/10	3
96	HMI	Control	TD400C Text Display	Siemens	6AV6 640-0AA00-0AX1	1
97	F27, F28	Control	1A Fuse	Bussmann	AGC-1	2
98	PLC	Control	S7-200 Dual Com Port Processor w/ 24 DI & 16 DO Points	Siemens	6ES7 216-2AD23-0XB0	1
99	AI	Control	S7-200 4 Point AI Module	Siemens	6ES7 231-0HC22-0XA0	1
100	AO	Control	S7-200 2 Point AO Moduet	Siemens	6ES7 232-0HB22-0XA0	1
101	PLC	Control	S7-200 Communication cable PC/PPI RS-232/485	Siemens	6ES7 901-3CB30-0XA0	1
102	SP1-SP3	Control	Plug In DI Surge Suppression, PT 4x1...DC	Phoenix Contact	2838322	3
103	SP1-SP3	Control	Terminal Block Base for Plugable Surge Supression, PT 4x1-BE	Phoenix Contact	2839163	3
104	LS1-LS4	Control	Panel Intrusion Switches, N.C. Contacts	NSI	76030PS	4
105	F31	Control	1-1/2A Fuse	Bussmann	AGC-1-1/2	1
106	F32	Control	3/4A Fuse	Bussmann	AGC-3/4	1
107	PT	Control	Level Transmitter	Endress & Hauser	RMA42AAAM2	2
108	PT	-	Submersible Level Transducer, 20ft Range w/ 60ft Cable & Mounting Clamp (Ship Loose)	Endress & Hauser	FMX21-FE221GGE21APO	1
109	F35-F37	Control	24VDC Fused Terminal Block With Indication	Phoenix Contact	3046090	3
110	F35-F37	Control	1/4A Fuse	Bussmann	GMA-250	3
111	VR1, VR2	Control	2K Ohm Potentimeter	Square D	9001SK2139	2
112	TBPP,1,DC,P1 & 1A, P2 & 2A	All	Terminal Block, Gray 26-10 AWG Wire	Phoenix Contact	3044102	161
113	TBPP,1,DC,P1 & 1A, P2 & 2A	All	Terminal Block End Barrier	Phoenix Contact	3047028	9
114	TBPP,1,DC,P1 & 1A, P2 & 2A	All	Terminal Block End Anchor	Phoenix Contact	0800886	17
115	TBP1A, TBP2A	Pump 1 & 2	Terminal Block, Gray 26-8 AWG Wire	Phoenix Contact	3044131	8
116	GND	Control	Control Panel Ground Bar	Square D	PK5GTA	1
117	VFD1, VFD2	Pump 1, 2 & Control	RJ45 Connector for non-sheilded CAT 6 Cable	Tessco	355847	4
118	-	-	Meter Socket (SHIP LOOSE)	Milbank	SEE HP TABLE SHEET 11	1
119	-	-	Stainless Steel 66' Float (SHIP LOOSE)	Anchor Scientific	PG6NO-SST	2
120	-	-	Insulated Ground Neutral (SHIP LOOSE)	Square D	SN400LA	1
121	-	-	Ground Bar Kit (SHIP LOOSE)	Square D	PKDGTJ250	1
122	-	-	NEMA 4A S.S. Disconnect (SHIP LOOSE)	Square D	J250DS	1
123	-	-	Antenna Mast Stabilization Plate (Ship Loose)	EWS	Custom	1
124	-	-	Stainless Steel "U" Bolt, 2" Pole, 5/16" Diameter Bolt w/ 2-1/2" Threads (SHIP LOOSE)			1
125	-	-	5/16" Stainless Steel Flat Washer for "U" Bolt (SHIP LOOSE)			2
126	-	-	5/16" Stainless Steel Lock Washer for "U" Bolt (SHIP LOOSE)			2
127	-	-	5/16" Stainless Steel Nut for "U" Bolt (SHIP LOOSE)			2
128	-	-	Stainless Steel "U" Bolt, 1/4" Diameter (SHIP LOOSE)			2
129	-	-	1/4" Stainless Steel 1/4" Nut for "U" Bolt (SHIP LOOSE)			4
130	-		1-1/4" Reduction Bushing for Antenna Tower, ROHN R-TB50 (SHIP LOOSE)	Tessco	36882	1
131	PLC	Control	S7-200 Memory Module	Siemens	6ES7 291BGF230AX0	1
132	ISO GND	Pump 1 & 2	Motor Isolated Ground Lug	Square D	9080LBA161101	2
133	N	Power	Generator Neutral Block, (1)#6-400kcmil ... (6)#14-2	Square D	9080LBA163106	1
134	N	Power	Generator Neutral Block Cover	Square D	9080LB31	1
135	SPNL2	Power	32"X12" Aluminum Sidepanel	EWS	Custom	1
136	FM	Control	Flow Meter	Endress & Hauser	50P Compact	1
137	PR	Control	Pressure Transmitter	Endress & Hauser	PMP71-AAG1PGJRAA	1

REVISIONS	BY

IMPROVEMENTS TO WASTEWATER COLLECTION SYSTEM

LIFT STATION CONSTRUCTION DETAILS

ELECTRICAL STANDARDS

FINAL SUBMITTAL

EMERALD COAST UTILITIES AUTHORITY

APPROVED BY:

Drawn:
Designed:
Checked:
Date: MAY '13
Scale:
Project No:
Sheet No. 10
OF 18 Sheets

ALL WORK SHALL BE CONSTRUCTED IN ACCORDANCE WITH THE LATEST EDITION OF THE E.C.U.A. STANDARD SPECIFICATIONS

Horsepower Related Compontents Equipment List

Item	Tag	Horsepower 1	2	3	5	7.5	10	15	20	25	30	40	50	60
Incoming Power Distribution Block	PDB	9080LBA362101	9080LBA362101	9080LBA362101	9080LBA362101	9080LBA362101	9080LBA362101	9080LBA362101	9080LBA362101	9080LBA363101	9080LBA363101	9080LBA363101	9080LBA363101	9080LBA363101
Incoming Power Distribution Block Cover	PDB	9080LB23	9080LB23	9080LB23	9080LB23	9080LB23	9080LB23	9080LB23	9080LB23	9080LB33	9080LB33	9080LB33	9080LB33	9080LB33
Main Circuit Breaker	CB1	HDL36040	HDL36040	HDL36040	HDL36050	HDL36070	HDL36080	HDL36100	HDL36110	HDL36150	JDL36175	JDL36200	JDL36225	JDL36250
Emergency Circuit Breaker	CB2	HDL36040	HDL36040	HDL36040	HDL36050	HDL36070	HDL36080	HDL36100	HDL36110	HDL36150	JDL36175	JDL36200	JDL36200	JDL36200
Generator Receptacle	GEN REC	ADR1044-RS	ADR1044-RS	ADR1044-RS	ADR1044-RS	ADR1044-RS	ADR1044-RS	ADR1044-RS	AR20044RS	AR20044RS	AR20044RS	AR20044RS	AR20044RS	AR20044RS
Generator Plug (Ship Loose)	GEN REC	ACP1044CD-RS	ACP1044CD-RS	ACP1044CD-RS	ACP1044CD-RS	ACP1044CD-RS	ACP1044CD-RS	ACP1044CD-RS	AP20044E-RS	AP20044E-RS	AP20044E-RS	AP20044E-RS	AP20044E-RS	AP20044E-RS
Main Power Distribution Block	PDB1	9080LBA363206	9080LBA363206	9080LBA363206	9080LBA363206	9080LBA363206	9080LBA363206	9080LBA363206	9080LBA363206	9080LBA365208	9080LBA365208	9080LBA365208	9080LBA365208	9080LBA365208
Main Power Distribution Block Cover	PDB1	9080LB33	9080LB33	9080LB33	9080LB33	9080LB33	9080LB33	9080LB33	9080LB33	9080LB53	9080LB53	9080LB53	9080LB53	9080LB53
VFD Circuit Breaker	CB4, CB5	HDL36015	HDL36015	HDL36015	HDL36020	HDL36030	HDL36030	HDL36050	HDL36050	HDL36070	HDL36080	HDL36100	HDL36100	HDL36125
VFD Semiconductor Fuse	F4-F6, F10-F12	A70P10-1	A70P10-1	A70P15-1	A70P20-1	A70P30-1	A70P30-1	A70P50-4	A70P50-4	A70P70-4	A70P80-4	A70P100-4	A70P100-4	A70P125-4
VFD Semiconductor Fuse Block	F4-F6, F10-F12	70316	70316	70316	70316	70316	70316	P243C	P243C	P243C	P243C	P243C	P243C	P266A
5% Line Reactor	LR1, LR2	RL-00202	RL-00404	RL-00804	RL-00803	RL-01203	RL-01803	RL-02503	RL-03503	RL-03503	RL-04503	RL-05503	RL-08003	RL-08003
480V VFD	VFD1, VFD2	CIMR-P7U40P7	CIMR-P7U41P5	CIMR-P7U42P2	CIMR-P7U43P7	CIMR-P7U45P5	CIMR-P7U47P5	CIMR-P7U49P0	CIMR-P7U4011	CIMR-P7U4015	CIMR-P7U4018	CIMR-P7U4024	CIMR-P7U4030	CIMR-P7U4037
Top Mount AC *Linear Layout Only*	HVAC1, HVAC2	IQ2000TXS-236	IQ2000TXS-236	IQ2000TXS-236	IQ2000TXS-236	IQ2000TXS-236	IQ2000TXS-236	IQ2000TXS-236	IQ2000TXS-236	IQ2000TXS-236	IQ2000TXS-236	IQ3000T-236	IQ4000T-236	IQ4000T-236
Side Mount AC *Back-to-Back Layout Only*	HVAC1, HVAC2	IQ2000VS-236	IQ2000VS-236	IQ2000VS-236	IQ2000VS-236	IQ2000VS-236	IQ2000VS-236	IQ2000VS-236	IQ2000VS-236	IQ2000VS-236	IQ2000VS-236	IQ3000VS-236	IQ4000VS-236	IQ4000VS-236
Meter Socket	-	UAP9701-RRL	UAP9701-RRL	UAP9701-RRL	UAP9701-RRL	UAP9701-RRL	UAP9701-RRL	UAP9701-RRL	UAP9701-RRL	UAP9701-RRL	UAP9701-RRL	UAP3566-X-HSP	UAP3566-X-HSP	UAP3566-X-HSP

Horsepower Related Power Conductors, CGB's and Hubs

Conductor Tag		Horsepower 1	2	3	5	7.5	10	15	20	25	30	40	50	60
P-01, P-03 & P-04	Description	(3)#8	(3)#8	(3)#8	(3)#8	(3)#4	(3)#4	(3)#3	(3)#2	(3)#1/0	(3)#2/0	(3)#3/0	(3)#4/0	(3)250kcmil
	Manufacturer	N/A	N/A	N/A	N/A	N/A	N/A	N/A	N/A	N/A	N/A	N/A	N/A	N/A
	Catalog #	N/A	N/A	N/A	N/A	N/A	N/A	N/A	N/A	N/A	N/A	N/A	N/A	N/A
	Length (Ft. Max)	N/A	N/A	N/A	N/A	N/A	N/A	N/A	N/A	N/A	N/A	N/A	N/A	N/A
	Cable Dia (in)	0.216"	0.216"	0.216"	0.216"	0.324"	0.324"	0.352"	0.384"	0.486"	0.532"	0.584"	0.642"	0.711"
	Appleton Connector	(3) -CG-1850	(3) -CG-1850	(3) -CG-1850	(3) -CG-1850	(3) -CG-3150	(3) -CG-3150	(3) -CG-3150	(3) -CG-3150	(3) -CG-3775	(3) -CG-5075	(3) -CG-5075	(3) -CG-6275	(3) -CG-6275
	Connector Range	0.187"-0.312"	0.187"-0.312"	0.187"-0.312"	0.187"-0.312"	0.312"-0.437"	0.312"-0.437"	0.312"-0.437"	0.312"-0.437"	0.375"-0.500"	0.500"-0.625"	0.500"-0.625"	0.625"-0.750"	0.625"-0.750"
	Meyers Hub	(3) 1/2" - STA-1	(3) 1/2" - STA-1	(3) 1/2" - STA-1	(3) 1/2" - STA-1	(3) 1/2" - STA-1	(3) 1/2" - STA-1	(3) 1/2" - STA-1	(3) 1/2" - STA-1	(3) 3/4" - STA-2	(3) 3/4" - STA-2	(3) 3/4" - STA-2	(3) 3/4" - STA-2	(3) 3/4" - STA-2
P-02A	Description	(1)#10	(1)#10	(1)#10	(1)#10	(1)#8	(1)#8	(1)#8	(1)#6	(1)#6	(1)#6	(1)#6	(1)#4	(1)#4
	Manufacturer	N/A	N/A	N/A	N/A	N/A	N/A	N/A	N/A	N/A	N/A	N/A	N/A	N/A
	Catalog #	N/A	N/A	N/A	N/A	N/A	N/A	N/A	N/A	N/A	N/A	N/A	N/A	N/A
	Length (Ft. Max)	N/A	N/A	N/A	N/A	N/A	N/A	N/A	N/A	N/A	N/A	N/A	N/A	N/A
	Cable Dia (in)	0.164"	0.164"	0.164"	0.164"	0.216"	0.216"	0.216"	0.254"	0.254"	0.254"	0.254"	0.324"	0.324"
	Appleton Connector	(1)-GC-1250	(1)-GC-1250	(1)-GC-1250	(1)-GC-1250	(1)-GC-1850	(1)-GC-1850	(1)-GC-1850	(1)-GC-1850	(1)-GC-1850	(1)-GC-1850	(1)-GC-1850	(1)-GC-3150	(1)-GC-3150
	Connector Range	0.125"-0.187"	0.125"-0.187"	0.125"-0.187"	0.125"-0.187"	0.187"-0.312"	0.187"-0.312"	0.187"-0.312"	0.187"-0.312"	0.187"-0.312"	0.187"-0.312"	0.187"-0.312"	0.312"-0.437"	0.312"-0.437"
	Hub	(1) 1/2" - STA-1	(1) 1/2" - STA-1	(1) 1/2" - STA-1	(1) 1/2" - STA-1	(1) 1/2" - STA-1	(1) 1/2" - STA-1	(1) 1/2" - STA-1	(1) 1/2" - STA-1	(1) 1/2" - STA-1	(1) 1/2" - STA-1	(1) 1/2" - STA-1	(1) 1/2" - STA-1	(1) 1/2" - STA-1
P-02B	Description	(1)#10	(1)#10	(1)#10	(1)#10	(1)#8	(1)#8	(1)#8	(1)#6	(1)#6	(1)#6	(1)#6	(1)#4	(1)#4
	Manufacturer	Southwire	Southwire	Southwire	Southwire	Southwire	Southwire	Southwire	Southwire	Southwire	Southwire	Southwire	Southwire	Southwire
P-05 & P-06	Description	(3)#8	(3)#8	(3)#8	(3)#8	(3)#4	(3)#4	(3)#3	(3)#2	(3)#1/0	(3)#2/0	(3)#3/0	(3)#3/0	(3)#3/0
	Manufacturer	Southwire	Southwire	Southwire	Southwire	Southwire	Southwire	Southwire	Southwire	Southwire	N/A	N/A	N/A	N/A
	Catalog #	N/A	N/A	N/A	N/A	N/A	N/A	N/A	N/A	N/A	N/A	N/A	N/A	N/A
	Length (Ft. Max)	N/A	N/A	N/A	N/A	N/A	N/A	N/A	N/A	N/A	N/A	N/A	N/A	N/A
	Cable Dia (in)	0.216"	0.216"	0.216"	0.216"	0.324"	0.324"	0.352"	0.384"	0.486"	0.532"	0.584"	0.584"	0.584"
	Appleton Connector	(3) -CG-1850	(3) -CG-1850	(3) -CG-1850	(3) -CG-1850	(3) -CG-3150	(3) -CG-3150	(3) -CG-3150	(3) -CG-3150	(3) -CG-3775	(3) -CG-5075	(3) -CG-5075	(3) -CG-5075	(3) -CG-5075
	Connector Range	0.187"-0.312"	0.187"-0.312"	0.187"-0.312"	0.187"-0.312"	0.312"-0.437"	0.312"-0.437"	0.312"-0.437"	0.312"-0.437"	0.375"-0.500"	0.500"-0.625"	0.500"-0.625"	0.500"-0.625"	0.500"-0.625"
	Hub	(3) 1/2" - STA-1	(3) 1/2" - STA-1	(3) 1/2" - STA-1	(3) 1/2" - STA-1	(3) 1/2" - STA-1	(3) 1/2" - STA-1	(3) 1/2" - STA-1	(3) 1/2" - STA-1	(3) 3/4" - STA-2	(3) 3/4" - STA-2	(3) 3/4" - STA-2	(3) 3/4" - STA-2	(3) 3/4" - STA-2
P-05A	Description	(1)#8	(1)#8	(1)#8	(1)#8	(1)#4	(1)#4	(1)#3	(1)#2	(1)#1/0	(1)#2/0	(1)#3/0	(1)#3/0	(1)#3/0
	Manufacturer	Southwire	Southwire	Southwire	Southwire	Southwire	Southwire	Southwire	Southwire	Southwire	Southwire	Southwire	Southwire	Southwire
P-07 & P-10	Description	(3)#14 W/G, TC	(3)#14 W/G, TC	(3)#14 W/G, TC	(3)#14 W/G, TC	(3)#12 W/G, TC	(3)#10 W/G, TC	(3)#8 W/G, TC	(3)#8 W/G, TC	(3)#8 W/G, TC	(3)#6 W/G, TC	(3)#2 W/G, TC	(3)#2 W/G, TC	(3)#2 W/G, TC
	Manufacturer	Houston Wire	Houston Wire	Houston Wire	Houston Wire	Houston Wire	Houston Wire	Houston Wire	Houston Wire	Houston Wire	Houston Wire	Houston Wire	Houston Wire	Houston Wire
	Catalog #	HW151 1403G	HW151 1403G	HW151 1403G	HW151 1403G	HW151 1203G	HW151 1003G	HW 154 00803	HW 154 00803	HW 154 00803	HW 154 00603	HW 154 00203	HW 154 00203	HW 154 00203
	Length (Ft. Max)	19 FT	19 FT	19 FT	19 FT	19 FT	19 FT	19 FT	19 FT	19 FT	19 FT	19 FT	19 FT	19 FT
	Cable Dia (in)	0.364"	0.364"	0.364"	0.364"	0.408"	0.447"	0.58"	0.58"	0.58"	0.69"	1.03"	1.03"	1.03"
	Appleton Connector	(2) -CG-3150	(2) -CG-3150	(2) -CG-3150	(2) -CG-3150	(2) -CG-3150	(2) -CG-3750	(2) - CG-5075	(2) - CG-5075	(2) - CG-5075	(2) - CG-6275	(2) - CG-100125	(2) - CG-100125	(2) - CG-100125
	Connector Range	0.312"-0.437"	0.312"-0.437"	0.312"-0.437"	0.312"-0.437"	0.312"-0.437"	0.375"-0.500"	0.500"-0.625"	0.500"-0.625"	0.500"-0.625"	0.625"-0.750"	1.000"-1.125"	1.000"-1.125"	1.000"-1.125"
	Hub	(2) 1/2" - STA-1	(2) 1/2" - STA-1	(2) 3/2" - STA-1	(2) 1/2" - STA-1	(2) 1/2" - STA-1	(2) 1/2" - STA-1	(2) 3/4" - STA-2	(2) 3/4" - STA-2	(2) 3/4" - STA-2	(2) 3/4" - STA-2	(2) 1-1/4" - STA-4	(2) 1-1/4" - STA-4	(2) 1-1/4" - STA-4
P-08 & P-11	Description	(3)#14	(3)#14	(3)#14	(3)#14	(3)#12	(3)#10	(3)#8	(3)#8	(3)#8	(3)#6	(3)#2	(3)#2	(3)#2
	Manufacturer	Southwire	Southwire	Southwire	Southwire	Southwire	Southwire	Southwire	Southwire	Southwire	Southwire	Southwire	Southwire	Southwire

REVISIONS	BY

IMPROVEMENTS TO WASTEWATER COLLECTION SYSTEM

LIFT STATION CONSTRUCTION DETAILS

ELECTRICAL STANDARDS

FINAL SUBMITTAL

EMERALD COAST UTILITIES AUTHORITY

APPROVED BY:

Drawn:
Designed:
Checked:
Date: MAY '13
Scale:
Project No:
Sheet No. 11
OF 18 Sheets

ALL WORK SHALL BE CONSTRUCTED IN ACCORDANCE WITH THE LATEST EDITION OF THE E.C.U.A. STANDARD SPECIFICATIONS

Power & Control Conductors, CGB's and Hubs

Cable Number	Description	Manufacturer	Catalog Numer	FT. Qty	Cable Diameter	Appleton Liquidtight Cable Connector	Connector Cable Range	Crouse-Hinds Myers Hub	From Panel/Enclosure	To Panel/Enclosure
P-13	(3)#8 AWG W/GND, Tray Cable	Houston Wire & Cable	HW 154 00803	6 FT	0.58"	(1) - CG-5075	0.500"-0.625"	(1) 3/4" - STA-2	Power Panel	480/240-120V Transformer
P-14	(3)#6 AWG W/GND, Tray Cable	Houston Wire & Cable	HW 154 00603	6 FT	0.69"	(1) - CG-6275	0.625"-0.750"	(1) 3/4" - STA-2	480/240-120V Transformer	Power Panel
P-15	3-1/C #12 AWG	N/A	N/A	AS REQ'D	N/A	N/A	N/A	N/A	Power Panel	Power Panel
P-16	3-1/C #12 AWG	N/A	N/A	AS REQ'D	N/A	N/A	N/A	N/A	Power Panel	Power Panel
C-01	(16) #14 AWG, Tray Cable	Houston Wire & Cable	HW 151 01416	24 FT	0.68"	(2) - CG-6275	0.625"-0.750"	(2) 3/4" - STA-2	Power Panel	Control Panel
C-02	(5) #14 AWG, Tray Cable	Houston Wire & Cable	HW 151 01405	19 FT	0.41"	(2) - CG-3750	0.375"-0.500"	(2) 1/2" - STA-1	Power Panel	Pump 1 Panel
C-03	(16) #14 AWG, Tray Cable	Houston Wire & Cable	HW 151 01416	22 FT	0.68"	(2) - CG-6275	0.625"-0.750"	(2) 3/4" - STA-2	Pump 1 Panel	Control Panel
C-04	(16) #14 AWG, Tray Cable	Houston Wire & Cable	HW 151 01416	19 FT	0.68"	(2) - CG-6275	0.625"-0.750"	(2) 3/4" - STA-2	Control Panel	Pump 2 Panel
C-05	1 Triad #16 SH, Tray Cable	Houston Wire & Cable	HW 121 1601T	22 FT	0.35"	(2) - CG-3150	0.312"-0.437"	(2) 1/2" - STA-1	Pump 1 Panel	Control Panel
C-06	1 Pair #16 SH, Tray Cable	Houston Wire & Cable	HW 120 01601	22 FT	0.33"	(2) - CG-2575	0.250"-0.375"	(2) 3/4" - STA-2	Pump 1 Panel	Control Panel
C-07	1 Triad #16 SH, Tray Cable	Houston Wire & Cable	HW 121 1601T	19 FT	0.35"	(2) - CG-3150	0.312"-0.437"	(2) 1/2" - STA-1	Pump 2 Panel	Control Panel
C-08	1 Pair #16 SH, Tray Cable	Houston Wire & Cable	HW 120 01601	19 FT	0.33"	(2) - CG-2575	0.250"-0.375"	(2) 3/4" - STA-2	Pump 2 Panel	Control Panel
C-09	(5) #14 AWG, Tray Cable	Houston Wire & Cable	HW 151 01405	22 FT	0.41"	(2) - CG-3750	0.375"-0.500"	(2) 1/2" - STA-1	Power Panel	Pump 2 Panel
PUMP 1-PWR	Per Mfg Specs	N/A	N/A	N/A	N/A	CG Series based on Mfg Specs	N/A	STA Series based on Mfg Specs	Field (Pump 1)	Pump 1 Panel
PUMP 1-MTP	Per Mfg Specs	N/A	N/A	N/A	N/A	CG Series based on Mfg Specs	N/A	STA Series based on Mfg Specs	Field (Pump 1)	Pump 1 Panel
PUMP 1-SF	Per Mfg Specs	N/A	N/A	N/A	N/A	CG Series based on Mfg Specs	N/A	STA Series based on Mfg Specs	Field (Pump 1)	Pump 1 Panel
PUMP 2-PWR	Per Mfg Specs	N/A	N/A	N/A	N/A	CG Series based on Mfg Specs	N/A	STA Series based on Mfg Specs	Field (Pump 2)	Pump 2 Panel
PUMP 2-MTP	Per Mfg Specs	N/A	N/A	N/A	N/A	CG Series based on Mfg Specs	N/A	STA Series based on Mfg Specs	Field (Pump 2)	Pump 2 Panel
PUMP 2-SF	Per Mfg Specs	N/A	N/A	N/A	N/A	CG Series based on Mfg Specs	N/A	STA Series based on Mfg Specs	Field (Pump 2)	Pump 2 Panel
Float Switch 1	Float Switch Cable	BY OTHERS	N/A	N/A	0.56"	(1) - CG-5050	0.500"-0.625"	(1) 1/2" - STA-1	Field (Float Switch)	Control Panel
Float Switch 2	Float Switch Cable	BY OTHERS	N/A	N/A	0.56"	(1) - CG-5050	0.500"-0.625"	(1) 1/2" - STA-1	Field (Float Switch)	Control Panel
Pressure Xducer	Pressure Transducer Cable	BY OTHERS	N/A	N/A	0.35"	(1) - G-3150	0.312"-0.437"	(1) 1/2" - STA-1	Field (Float Switch)	Control Panel
Antenna COAX	Coaxial Cable	BY OTHERS	N/A	N/A	0.408"	(1) - CG-3750	0.375"-0.500"	(1) 1/2" - STA-1	Field (Antenna)	Control Panel
CAT5-1	Ethernet	BELDEN	7922A	19 FT	0.301"	(2) - CG-1850	0.187"-0.312"	(2) 1/2" - STA-1	Pump 1 Panel	Control Panel
CAT5-2	Ethernet	BELDEN	7922A	22 FT	0.301"	(2) - CG-1850	0.187"-0.312"	(2) 1/2" - STA-1	Pump 2 Panel	Control Panel

REVISIONS	BY

IMPROVEMENTS TO WASTEWATER COLLECTION SYSTEM

LIFT STATION CONSTRUCTION DETAILS

ELECTRICAL STANDARDS

FINAL SUBMITTAL

ECUA

EMERALD COAST UTILITIES AUTHORITY

APPROVED BY:

Drawn:

Designed:

Checked:

Date: MAY '13

Scale:

Project No:

Sheet No. 12

OF 18 Sheets

ALL WORK SHALL BE CONSTRUCTED IN ACCORDANCE WITH THE LATEST EDITION OF THE E.C.U.A. STANDARD SPECIFICATIONS

NOTES:

1) ALL SPARE WIRE WILL BE CLEARLY LABELED WITH THE CABLE NUMBER & A SPARE DESIGNATION ON INDIVIDUAL WIRES (S1, S2, ect...). THESE SPARES SHOULD BE ABLE TO REACH ALL TERMINAL BLOCKS IN THE PANEL.

2) SPARE CONDUCTORS SHOULD BE TRIMMED AND HEAT SHRINK SHOULD BE USED TO SECURE THE SPARE CONDUCTORS IN THE CABLE.

3) THE INNER CONNECTING CONDUCTORS BETWEEN THE PANELS ARE CODED AS FOLLOWS: THE FIRST GROUP OF CHARACTER IS THE WIRE NUMBER AND THE SECOND GROUP IS THE COLOR (I.E. 1(BK) SIGNIFIES THAT THE WIRE NUMBER IS 1 AND THE COLOR IS BLACK). WIRE COLOR CODE AS FOLLOWS: BK-BLACK, RD-RED, BU-BLUE, OR-ORANGE, YL-YELLOW, BN-BROWN. FOR COLORS THAT ARE DENOTED AS XX/YY, XX IS THE BASE COLOR AND YY IS THE SPIRAL STRIPE (I.E. RD/BK IS A RED WIRE WITH A BLACK SPIRAL STRIPE).

4) SEE SHEETS 11 & 12 FOR PANEL TO PANEL INNER CONNECTING CONDUCTOR AND CABLE DETAILS.

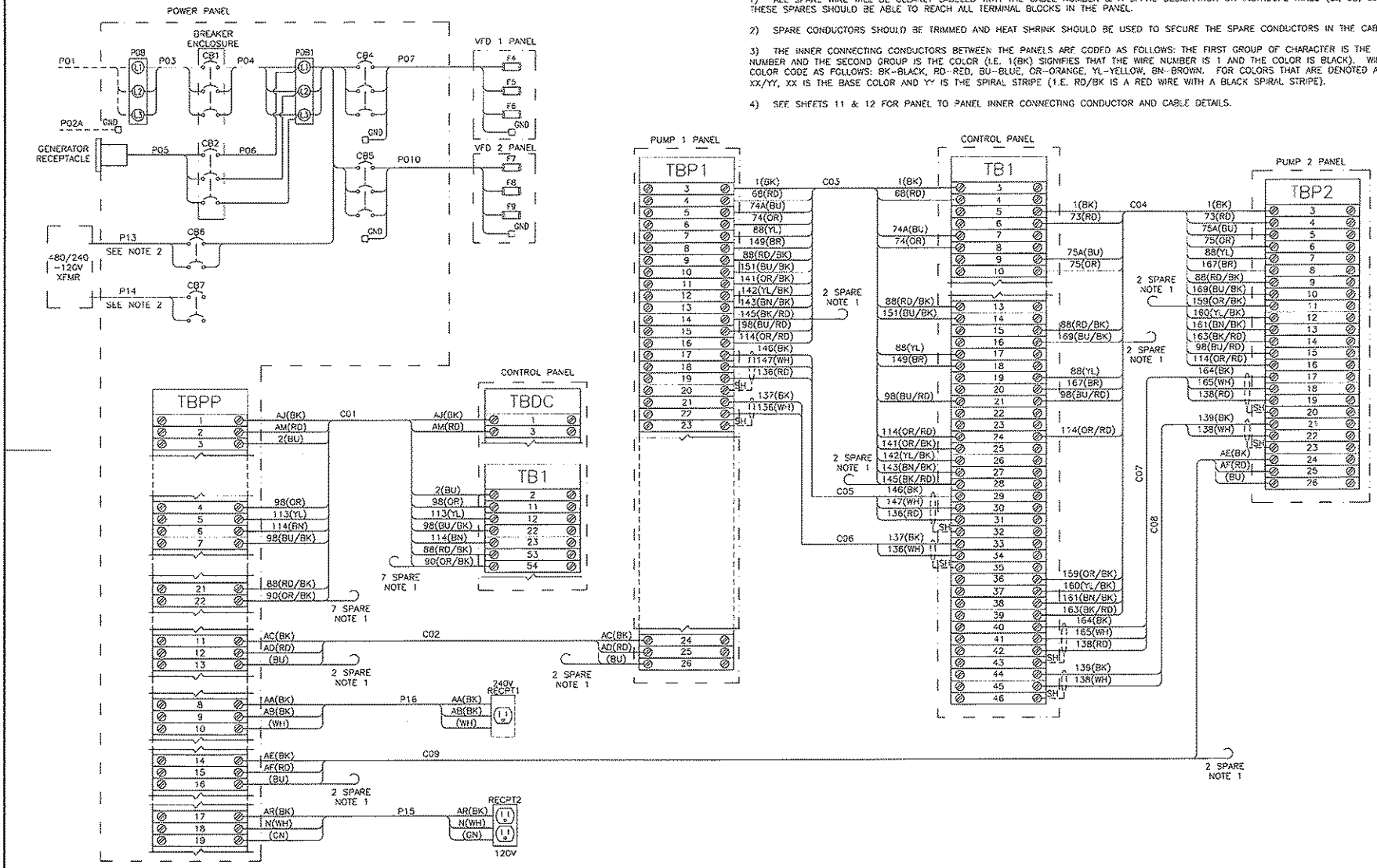

REVISIONS	BY

IMPROVEMENTS TO WASTEWATER COLLECTION SYSTEM

LIFT STATION CONSTRUCTION DETAILS

ELECTRICAL STANDARDS

FINAL SUBMITTAL

EMERALD COAST UTILITIES AUTHORITY

APPROVED BY:

Drawn:	
Designed:	
Checked:	
Date:	MAY '13
Scale:	
Project No:	
Sheet No.	13
OF 18 Sheets	

ALL WORK SHALL BE CONSTRUCTED IN ACCORDANCE WITH THE LATEST EDITION OF THE E.C.U.A. STANDARD SPECIFICATIONS

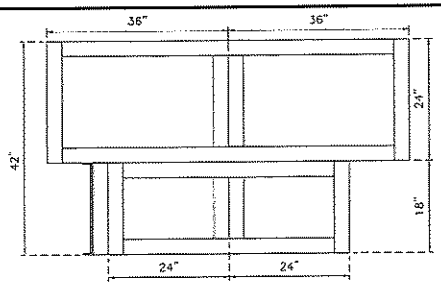

TOP VIEW

NOTES:

1. TOP AND BOTTOM OF BASE TO BE LEFT OPEN.
2. DRILL TOP OF BASE TO ATTACH ENCLOSURES AS REQUIRED.
3. DRILL BOTTOM OF BASE TO ATTACH TO SLAB AS REQUIRED.

ATTENTION

THIS LAYOUT IS ONE OF TWO (2) POSSIBLE CHOICES - SEE SHEET 14 FOR THE OTHER OPTION. IF THIS LAYOUT OPTION IS SELECTED, SEE SHEET 7A FOR ASSOCIATED PANEL LAYOUT DETAILS.

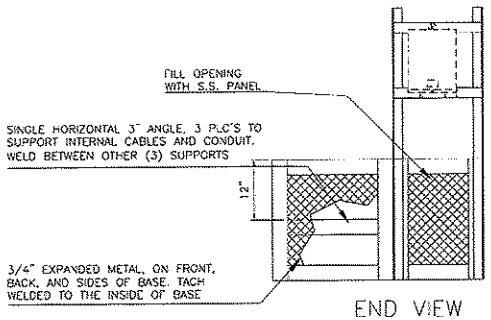

END VIEW

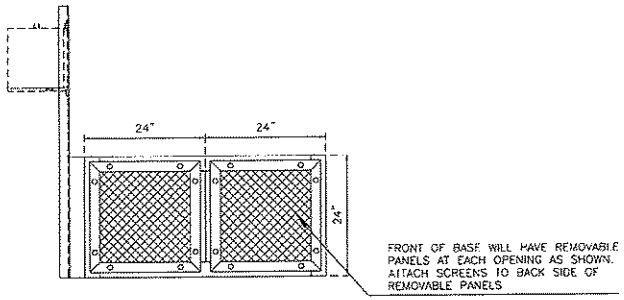

FRONT VIEW

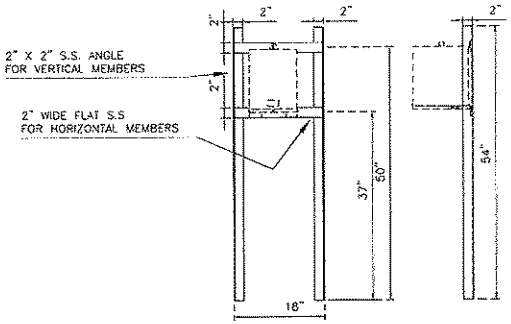

RACK DETAILS

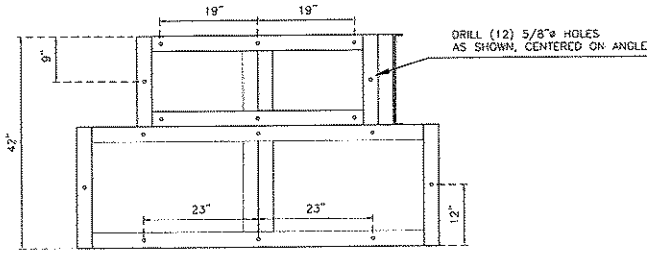

BOTTOM VIEW

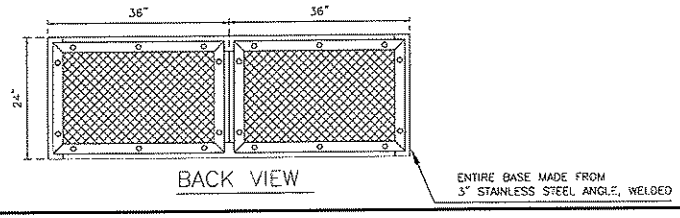

BACK VIEW

REVISIONS	BY

IMPROVEMENTS TO WASTEWATER COLLECTION SYSTEM

LIFT STATION CONSTRUCTION DETAILS

ELECTRICAL STANDARDS

FINAL SUBMITTAL

ECUA EMERALD COAST UTILITIES AUTHORITY

APPROVED BY:

Drawn	
Designed	
Checked	
Date	MAY '13
Scale	
Project No	
Sheet No.	14A
	OF 18 Sheets

ALL WORK SHALL BE CONSTRUCTED IN ACCORDANCE WITH THE LATEST EDITION OF THE E.C.U.A. STANDARD SPECIFICATIONS

Power Panel Fuse Schedule				
Fuse	Type	Voltage	Amps	Description
F1	KTK-R-1	600	1A	Phase Monitor A Phase
F2	KTK-R-1	600	1A	Phase Monitor B Phase
F3	KTK-R-1	600	1A	Phase Monitor C Phase
F16	AGC-3	250	3A	Power Supply 1 Primary
F17	AGC-3	250	3A	Power Supply 2 Primary

Pump 1 Panel Fuse Schedule				
Fuse	Type	Voltage	Amps	Description
F4	A70PXX-X	700	XXXA	Pump 1 Phase A
F5	A70PXX-X	700	XXXA	Pump 1 Phase B
F6	A70PXX-X	700	XXXA	Pump 1 Phase C
F7	FNQ-R-1/4	600	1/4A	Pump 1 CPT Phase A
F8	FNQ-R-1/4	600	1/4A	Pump 1 CPT Phase C
F9	FNQ-1/2	500	1/2A	Pump 1 CPT Secondary

*SEE SHEET 11 FOR FUSE TYPE AND AMPACITY

Pump 2 Panel Fuse Schedule				
Fuse	Type	Voltage	Amps	Description
F10	A70PXX-X	700	XXXA	Pump 2 Phase A
F11	A70PXX-X	700	XXXA	Pump 2 Phase B
F12	A70PXX-X	700	XXXA	Pump 2 Phase C
F13	FNQ-R-1/4	600	1/4A	Pump 2 CPT Phase A
F14	FNQ-R-1/4	600	1/4A	Pump 2 CPT Phase C
F15	FNQ-1/2	500	1/2A	Pump 2 CPT Secondary

*SEE SHEET 11 FOR FUSE TYPE AND AMPACITY

Control Panel Fuse Schedule				
Fuse	Type	Voltage	Amps	Description
F18	AGC-10	250	10A	Power Supply 1 Secondary
F19	AGC-10	250	10A	Power Supply 2 Secondary
F20	AGC-10	250	10A	Control Power
F21	AGC-10	250	10A	Batteries
F22	AGC-2	250	2A	Radio Power Supply Primary
F23	AGC-2	250	2A	Radio Power Supply Secondary
F24	AGC-1/4	250	1/4A	Pump 1 Motor Thermal
F25	AGC-1/4	250	1/4A	Pump 2 Motor Thermal
F26	AGC-1/10	250	1/10A	Operator Interface
F27	AGC-1	250	1A	Digital Inputs 0.0-1.4
F28	AGC-1	250	1A	Digital Inputs 1.5-2.7
F29	AGC-2	250	2A	Digital Outputs 0.0-0.7
F30	AGC-2	250	2A	Digital Outputs 1.0-1.7
F31	AGC-1-1/2	250	1-1/2A	PLC Power
F32	AGC-3/4	250	3/4A	Process Transmitter Supply
F33	AGC-1/10	250	1/10A	Analog Inputs
F34	AGC-1/10	250	1/10A	Analog Outputs
F35	GMA-1/4	250	1/4A	Analog Input 2
F36	GMA-1/4	250	1/4A	Analog Input 3
F37	GMA-1/4	250	1/4A	Analog Input 4

HMI BUTTON LEGEND	
F1	FAULT RESET/ENABLE INTRUSION
SHIFT+F1	DISABLE INTRUSION
F2	ALTERNATE PUMP ASSIGNMENTS
F3	RESET PUMP 1 RUNTIME
SHIFT+F3	RESET PUMP 2 RUNTIME
F4	ALARMS SCREEN
F5	OVERVIEW SCREEN
F6	PUMP 1 SCREEN
F7	PUMP 2 SCREEN
F8	SETPOINTS SCREEN

CONTROL PANEL ISR INFORMATION TAG'S

THIS AREA IN BLUE IS FOR INTRINSICALLY SAFE CIRCUITS AND DEVICES ONLY. THIS AREA INCLUDES THE AIR SPACE DIRECTLY IN FRONT OF THE BLUE AREA BETWEEN THE BACKPANEL AND THE ENCLOSURE WALLS AND DOOR INCLUDING THE BOTTOM OF THE ENCLOSURE. ONLY INTRINSICALLY SAFE DEVICES AND WIRING ARE ALLOWED IN THIS AREA. DO NOT ROUTE NON-INTRINSICALLY SAFE WIRING THROUGH THIS AREA OF ENCLOSURE.

WARNING

SUBSTITUTION OF COMPONENTS MAY IMPAIR INTRINSIC SAFETY

CONTROL PANEL EXTERIOR TAG INFORMATION

WARNING

TO PREVENT IGNITION OF FLAMMABLE OR COMBUSTIBLE ATMOSPHERES DISCONNECT POWER BEFORE SERVICING

PROVIDES INTRINSICALLY SAFE CIRCUIT EXTENSIONS FOR USE IN CLASS I, GROUPS A, B, C, AND D WHEN CONNECTED PER REFERENCE DRAWINGS ON MAIN NAMEPLATE LABEL

VFD 1 & 2 INCOMING FUSE TAG INFORMATION

WARNING

FUSES FEED FROM BOTTOM SIDE

CONTROL PANEL DEADFRONT TAG INFORMATION

SECURELY FASTEN ALL INNER DOOR LATCHES BEFORE CLOSING OUTER DOOR. FAILURE TO FOLLOW THESE INSTRUCTIONS COULD CAUSE THE OUTER DOOR TO JAM WHEN RE-OPENED

POWER PANEL GENERATOR NEUTRAL TAG INFORMATION

WARNING

480/277V SYSTEM NEUTRAL IS MARKED WITH GRAY TAPE

WARNING

240/120V SYSTEM NEUTRAL IS MARKED WITH WHITE TAPE

Nameplate Data													
Total Load (FLA)	27	31	35	40	52	62	74	88	102	118	136	170	192
Motor Hp	1	2	3	5	7.5	10	15	20	25	30	40	50	60
Motor FLA	2.1	3.4	4.8	7.6	11	14	21	27	34	40	52	65	77

Torque Rating Table													
	Horsepower												
Component	1	2	3	5	7.5	10	15	20	25	30	40	50	60
Incoming Distribution Block (PDB1)	40lb-in/4.5N-m	40lb-in/4.5N-m	40lb-in/4.5N-m	40lb-in/4.5N-m	120lb-in/13.5N-m	120lb-in/13.5N-m	120lb-in/13.5N-m	120lb-in/13.5N-m	275lb-in/31.0N-m	275lb-in/31.0N-m	275lb-in/31.0N-m	275lb-in/31.0N-m	275lb-in/31.0N-m
Main Ground Block	20lb-in/2.2N-m	20lb-in/2.2N-m	20lb-in/2.2N-m	20lb-in/2.2N-m	25lb-in/2.8N-m	25lb-in/2.8N-m	25lb-in/2.8N-m	35lb-in/3.9N-m	35lb-in/3.9N-m	35lb-in/3.9N-m	35lb-in/3.9N-m	35lb-in/3.9N-m	35lb-in/3.9N-m
Motor Distribution Block (PDB2 & 3)	35lb-in/4.0N-m	35lb-in/4.0N-m	35lb-in/4.0N-m	35lb-in/4.0N-m	35lb-in/4.0N-m	35lb-in/4.0N-m	40lb-in/4.5N-m	40lb-in/4.5N-m	40lb-in/4.5N-m	120lb-in/13.5N-m	120lb-in/13.5N-m	120lb-in/13.5N-m	120lb-in/13.5N-m
Motor Ground Block	35lb-in/4.0N-m	35lb-in/4.0N-m	35lb-in/4.0N-m	35lb-in/4.0N-m	35lb-in/4.0N-m	35lb-in/4.0N-m	35lb-in/4.0N-m	35lb-in/4.0N-m	40lb-in/4.5N-m	45lb-in/5.1N-m	45lb-in/5.1N-m	45lb-in/5.1N-m	45lb-in/5.1N-m

REVISIONS	BY

IMPROVEMENTS TO WASTEWATER COLLECTION SYSTEM

LIFT STATION CONSTRUCTION DETAILS

ELECTRICAL STANDARDS

FINAL SUBMITTAL

EMERALD COAST UTILITIES AUTHORITY

APPROVED BY:

Drawn:
Designed:
Checked:
Date: MAY '13
Scale:
Project No:
Sheet No. 15
OF 18 Sheets

ALL WORK SHALL BE CONSTRUCTED IN ACCORDANCE WITH THE LATEST EDITION OF THE E.C.U.A. STANDARD SPECIFICATIONS

REVISIONS	BY

HAZARDOUS (CLASSIFIED) LOCATION

CLASS I, ZONE 0 OR 1, GROUPS IIC, IIB, IIA or
CLASS I, DIVISION 1, GROUPS A,B,C,D
CLASS II, DIVISION 1, GROUPS E,F,G
CLASS III, DIVISION 1

NON-HAZARDOUS LOCATION

CLASS I, ZONE 2, GROUPS IIC, IIB, IIA or
CLASS I, DIVISION 2, GROUPS A,B,C,D

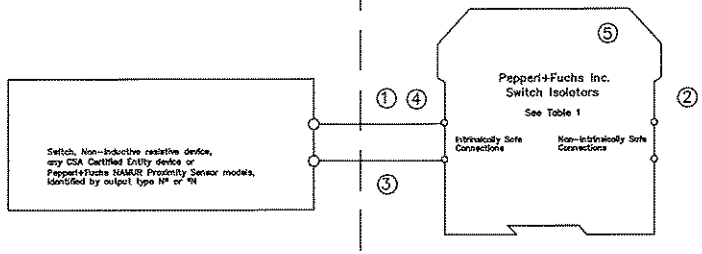

Notes:

① The intrinsically safe wiring must be installed in accordance with the Canadian Electrical Code CSA C22.1, Part 1, Appendix F.

② Barriers listed in Table 1 shall not be connected to any device that uses or generates in excess of 250Vrms or DC unless it has been determined that the voltage is adequately isolated from the barrier. Barriers listed in Table 2 shall not be connected to any device that uses or generates in excess of 60Vrms or DC unless the voltage is limited by an adequate means.

③ Any combination of up to 10 channels of the barriers listed in Table 1 or Table 2 may be connected in parallel and connected to a switch in a hazardous location.

④ The Entity concept allows interconnection of intrinsically safe apparatus with associated apparatus not specifically examined in combination as a system when the approved values of Voc and Isc for the associated apparatus are less than or equal to Vmax and Imax for the intrinsically safe apparatus and the approved values of Ca and La for the associated apparatus are greater than Ci + Ccable and Li + Lcable, respectively, for the intrinsically safe apparatus.

⑤ The following models with part number greater than 100000 are approved for mounting in a Class I, Zone 2, Groups IIC,IIB,IIA or Class I, Division 2, Groups A,B,C,D hazardous (classified) location: KF**-SR2-EX1.W, KF**-SR2-EX1.W.LB, KF**-SR2-EX2.W, KFD2-SR2-EX2.2S, KFD2-ST2-EX1.*, KFD2-ST2-EX2.*, KFD2-SOT2-EX1.*, KFD2-SOT2-EX2.*.

WARNING: Substitution of components may impair intrinsic safety and/or suitability for use in Class I, Division 2, Groups A,B,C,D or Class I, Zone 2, Groups IIC,IIB,IIA.
ADVERTISSEMENT: La substitution de composants peut compromettre la sécurité intrinsèque.

No changes without prior permission
CSA
THIS DRAWING CONTAINS PROPRIETARY DATA. NO DISCLOSURE, REPRODUCTION, OR USE OF ANY PART MAY BE MADE EXCEPT BY WRITTEN PERMISSION.

Title Installation Drawing for CSA Certified Switch Isolators

Revisions				ECO No.	
2-20-2008					
In.	Date	Cons.	Resp.	Appr.	

Pepperl+Fuchs® Inc. Twinsburg, OH 44087-2202 | Repl.No. -- | Draw. No. 116-0047j | Sh. 1 of 2

TABLE 1: Barriers Certified to CSA Standard C22.2 No. 157 (Um = 250 V)

Model Numbers	Terminals	SYSTEM V_{max}(V)	SYSTEM Res. (Ω)	ENTITY V_{oc} (V)	ENTITY I_{sc}(mA)	C_a(uF) GRPS A,B	C_a(uF) GRPS C,E	C_a(uF) GRPS D,F,G	L_a(mH) GRPS A,B	L_a(mH) GRPS C,E	L_a(mH) GRPS D,F,G
KFD2-SOT-Ex1*,KFD2-SOT-Ex2* KFD2-SR-Ex1*,KFD2-SR-Ex2* KFD2-SRT-Ex1* KFD2-ST-Ex1*,KFD2-ST-Ex2* KFA5-SR2-Ex1*,KFA5_SR2-Ex2* KFA6-SR2-Ex1*,KFA6-SR2-Ex2* KFD2-SR2-Ex1*,KFD2-SR2-Ex2*	1-3, 2-3; 4-6, 5-6	12.6	650	12.9	19.8	1.273	3.820	10.18	84.88	298.7	744.4
KFA5-SOT2-Ex1*,KFA5-SOT2-Ex2* KFA6-SOT2-Ex1*,KFA6-SOT2-Ex2*	1-3, 2-3; 4-6, 5-6	10.5	811	10.5	13.0	2.66	7.9	21.3	192	671	1000

TABLE 2: Barriers Certified to CSA Standard E79-11 (Um = 60 V)

Model Numbers	Terminals	Load Parameters U_o (V_{oc})	I_o (I_{sc})	C_a(uF) GRPS IIC (A,B)	C_a(uF) GRPS IIB (C,E)	C_a(uF) GRPS IIA (D,F,G)	L_a(mH) GRPS IIC (A,B)	L_a(mH) GRPS IIB (C,E)	L_a(mH) GRPS IIA (D,F,G)
KFD2-SOT2-Ex1*,KFD2-SOT2-Ex2* KFD2-ST2-Ex1*,KFD2-ST2-Ex2*	1-3, 2-3; 4-6, 5-6	10.5	13.0	2.66	7.9	21.3	192	671	1000

No changes without prior permission
CSA
THIS DRAWING CONTAINS PROPRIETARY DATA. NO DISCLOSURE, REPRODUCTION, OR USE OF ANY PART MAY BE MADE EXCEPT BY WRITTEN PERMISSION.

Title Installation Drawing for CSA Certified Switch Isolators

Revisions				ECO No.	
2-20-2008					
In.	Date	Cons.	Resp.	Appr.	

Pepperl+Fuchs® Inc. Twinsburg, OH 44087-2202 | Repl.No. -- | Draw. No. 116-0047j | Sh. 2 of 2

IMPROVEMENTS TO WASTEWATER COLLECTION SYSTEM
LIFT STATION CONSTRUCTION DETAILS
ELECTRICAL STANDARDS
FINAL SUBMITTAL

EMERALD COAST UTILITIES AUTHORITY

APPROVED BY:

Drawn:
Designed:
Checked:
Date: MAY '13
Scale:
Project No
Sheet No. 16
OF 18 Sheets

GENERAL ELECTRICAL NOTES

NEW WORK:

1. ENTIRE ELECTRICAL INSTALLATION SHALL BE IN ACCORDANCE WITH THE LATEST EDITION (UNLESS NOTED OTHERWISE) OF THE FOLLOWING CODES AND STANDARDS:
   1.1. NATIONAL ELECTRICAL CODE (NFPA 70).
   1.2. STANDARD FOR FIRE PROTECTION IN WASTEWATER TREATMENT AND COLLECTION FACILITIES (NFPA 820).
2. THE CONTRACTOR SHALL BE RESPONSIBLE FOR READING ALL PROJECT SPECIFICATIONS AND WILL BE RESPONSIBLE FOR MEETING ALL REQUIREMENTS OUTLINED IN THE SPECIFICATIONS.
3. CONTRACTOR SHALL COORDINATE ALL WORK WITH OTHER TRADES PRIOR TO ROUGH-IN AND INSTALLATION.
4. WORKING SPACE FOR ALL ELECTRICAL AND CONTROL EQUIPMENT OPERATING AT 600V VOLTS OR LESS TO GROUND AND LIKELY TO REQUIRE EXAMINATION, ADJUSTMENT, SERVICING, OR MAINTENANCE WHILE ENERGIZED SHALL COMPLY WITH NEC, ARTICLE 110.26.
5. THE ELECTRICAL DESIGN PROVIDES A NUMBER OF BRANCH CIRCUITS, AMPACITY AND OVERCURRENT PROTECTION FOR OTHER DIVISIONS DESIGN BASIS EQUIPMENT CONFORMING TO MANUFACTURER'S SPECIFICATIONS AVAILABLE AT TIME OF DESIGN. THE CONTRACTOR SHALL VERIFY ALL EQUIPMENT LOADS PRIOR TO ROUGH-IN. IF REQUIREMENTS OF EQUIPMENT ACTUALLY PROVIDED UNDER CONTRACT FOR CONSTRUCTION ARE DIFFERENT, CONTRACTOR SHALL MAKE ALL CHANGES NECESSARY WITHOUT INCREASE IN THE CONTRACT AMOUNT. SUCH CHANGES SHALL BE BASED UPON REQUIREMENTS, NAMEPLATE VALUES AND CODE REQUIREMENTS, WHICHEVER IS MORE STRINGENT, AND MAY INCLUDE, BUT ARE NOT LIMITED TO: SIZE OF CONDUCTORS, SIZE OF CONDUIT, QUANTITY OF CONDUCTORS AND CONDUITS, TYPE AND SIZE OF CIRCUIT BREAKER OR DISCONNECT, OVERLOADS, FULL-VOLTAGE STARTERS, REDUCED VOLTAGE SOFT STARTERS, VARIABLE FREQUENCY DRIVES, AND FUSE PROTECTION.
6. THE ELECTRICAL CONTRACTOR IS REQUIRED TO COORDINATE, PROVIDE, AND INSTALL A FULLY OPERATIONAL AND CODE COMPLIANT ELECTRICAL SYSTEM. THIS MAY INCLUDE THE ADDITION OF ELECTRICAL ITEMS NOT SHOWN ON THE ELECTRICAL PLANS, BUT REQUIRED FOR SYSTEM OPERATION.
7. CONTRACTOR SHALL COORDINATE INSTALLATION OF ELECTRICAL SERVICE WITH ELECTRICAL UTILITY COMPANY PROVIDING ELECTRICAL SERVICE TO FACILITY. CONTRACTOR SHALL PAY ALL FEES ASSESSED BY ELECTRICAL UTILITY COMPANY TO PROVIDE ELECTRICAL SERVICE TO FACILITY.
8. CONTRACTOR SHALL EXCAVATE AND CONDUCT DEMOLITION SO AS TO AVOID DAMAGE TO EXISTING UTILITIES AND OTHER UNDERGROUND OR CONCEALED ITEMS. IF EXISTING OR NEW ITEMS ARE DAMAGED, THE CONTRACTOR SHALL NOTIFY THE OWNER AT ONCE OF ALL DAMAGE AND SHALL REPAIR (OR REPLACE IF NECESSARY) TO THE ORIGINAL CONDITION TO THE SATISFACTION OF OWNER AND ENGINEER AT NO CHARGE IN THE CONTRACT AMOUNT.
9. THE CONTRACTOR SHALL BE RESPONSIBLE FOR PROVIDING DETAILED ELECTRICAL AND CONTROL EQUIPMENT LAYOUT DRAWINGS TO THE ENGINEER AND OWNER FOR APPROVAL PRIOR TO INSTALLATION.
10. ALL CONDUITS NOT LOCATED UNDER SLAB SHALL HAVE A MINIMUM BURIAL DEPTH OF 42", UNLESS NOTED OTHERWISE.
11. CONDUITS SHALL BE BURIED 42" (MINIMUM) BELOW GRADE WITH MARKER TAPE 6" ABOVE TOP OF CONDUIT, UNLESS NOTED OTHERWISE.
12. MINIMUM SIZE CONDUIT SHALL BE 1" (UNLESS NOTED OTHERWISE).
13. CONDUIT ROUTINGS AND DEVICE/EQUIPMENT LOCATIONS SHOWN ARE DIAGRAMMATIC ONLY. CONTRACTOR SHALL FIELD ROUTE AND LOCATE AS REQUIRED.
14. CONTRACTOR SHALL PROVIDE PULL BOXES IN POWER CIRCUIT CONDUIT AS REQUIRED TO LIMIT THE NUMBER OF BENDS TO A MAXIMUM OF 270° OR THREE 90° BENDS.
15. ALL WIRE SHALL BE COPPER.
16. ALL ELECTRICAL CIRCUITS SHALL INCLUDE A GREEN GROUNDING CONDUCTOR SIZED PER NEC.
17. CONDUCTORS SHALL BE TERMINATED ON TERMINAL BLOCKS.
18. THE CONTRACTOR SHALL TAG ALL POWER AND CONTROL SYSTEM CABLING AT ALL TERMINATION POINTS.
19. FINAL CONNECTION TO ALL EQUIPMENT IS SHOWN DIAGRAMMATIC. PROVIDE FINAL CONNECTION AS REQUIRED PER MANUFACTURER OF EQUIPMENT.
20. CONTRACTOR SHALL MAINTAIN A SET OF PRINTS AND MARK-UP DURING CONSTRUCTION TO REFLECT "AS-BUILT" CONDITIONS. PRINTS SHALL BE DELIVERED TO THE ENGINEER UPON COMPLETION OF THE PROJECT.
21. ALL HARDWARE SHALL BE STAINLESS STEEL.
22. ALUMINUM CONDUIT SHALL BE COATED WITH (2) WRAPS OF ANTI-CORROSION TAPE OR RUN THROUGH A SCHEDULE 80 PVC SLEEVE TO WHEN IN CONTACT WITH CONCRETE.
23. BARE COPPER SHALL BE COATED WITH (2) WRAPS OF ANTI-CORROSION TAPE OR RUN THROUGH A SCHEDULE 80 PVC SLEEVE TO WHEN IN CONTACT WITH CONCRETE.
24. ENGINEER OF RECORD SHALL BE RESPONSIBLE FOR FINAL SIZING OF ALL EQUIPMENT.

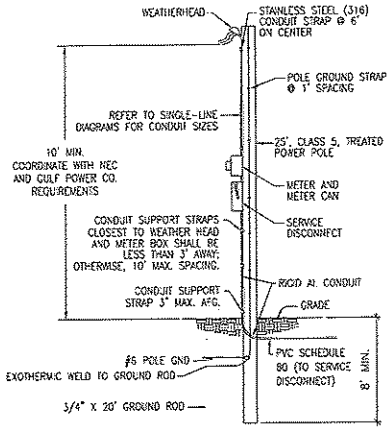

SERVICE LATERAL CONDUIT SHALL BE 3" (MIN) SCHEDULE 80 PVC BELOW GRADE AND 3" (MIN) RIGID AL CONDUIT ABOVE GRADE. ANY REQUIREMENTS BY THE UTILITY COMPANY SHALL PREVAIL OVER THE REQUIREMENTS OUTLINED HERE AND SHALL BE COORDINATED BY THE ELECTRICAL CONTRACTOR PRIOR TO INSTALLATION.

A3 UTILITY POLE DETAIL
NOT TO SCALE

ALL WORK SHALL BE CONSTRUCTED IN ACCORDANCE WITH THE LATEST EDITION OF THE E.C.U.A. STANDARD SPECIFICATIONS

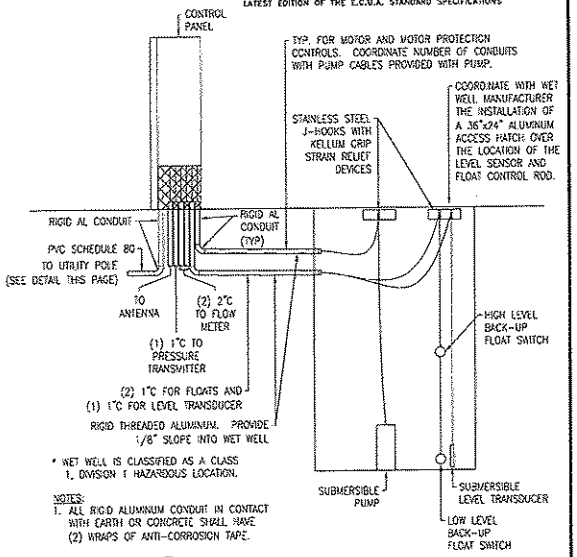

* WET WELL IS CLASSIFIED AS A CLASS I, DIVISION I HAZARDOUS LOCATION.

NOTES:
1. ALL RIGID ALUMINUM CONDUIT IN CONTACT WITH EARTH OR CONCRETE SHALL HAVE (2) WRAPS OF ANTI-CORROSION TAPE.

B4 TYPICAL WET WELL SECTION DETAIL
NOT TO SCALE

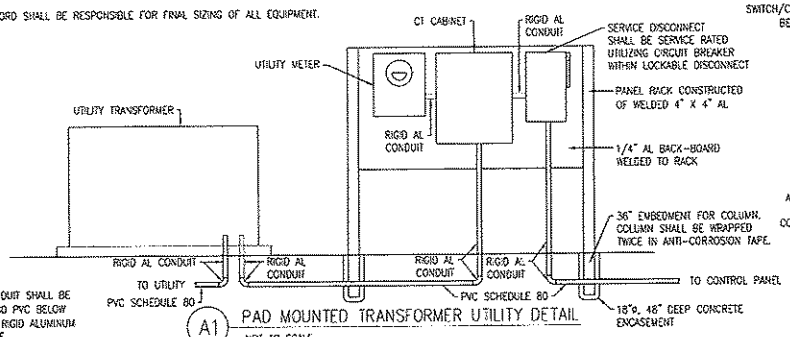

* SERVICE LATERAL CONDUIT SHALL BE 3" (MIN) SCHEDULE 80 PVC BELOW GRADE AND 3" (MIN) RIGID ALUMINUM CONDUIT ABOVE GRADE.

A1 PAD MOUNTED TRANSFORMER UTILITY DETAIL
NOT TO SCALE

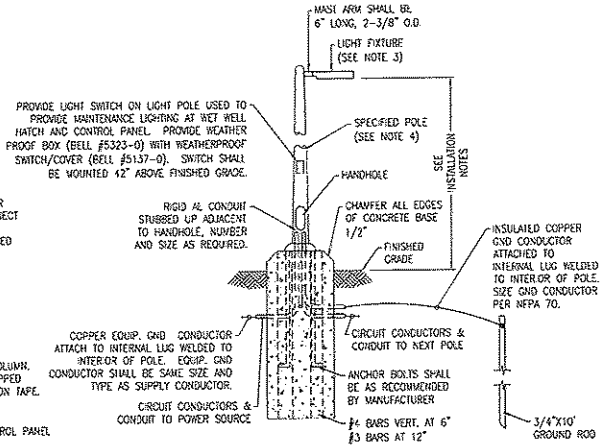

A4 LIGHT POLE INSTALLATION DETAIL
NOT TO SCALE

LIGHTING PERFORMANCE CRITERIA:
1. LIGHTING FIXTURE LAYOUT SHALL BE BASED UPON ACHEIVING 20 FOOT CANDLES (+/- 20%) AT THE FRONT OF THE CONTROL PANEL (WORK-PLANE OF 24" AFG) AND AT THE WET WELL ACCESS HATCH (WORKPLANE OF 0" AFG).
2. GENERAL SECURITY LIGHTING SHALL ENCOMPASS ACCESS GATE AND ALL PIPING/EQUIPMENT AT A MIN. AVERAGE 1 FOOT-CANDLE (+/- 20%, AT WORKPLANE OF 0" AFG).
3. REFFER TO LIGHTING CONTROL DIAGRAM ON SHEET No. 18 FOR ADDITIONAL REQUIREMENTS.

LIGHT POLE INSTALLATION NOTES:
1. BURIAL AND DIAMETER DIMENSIONS INDICATED ARE FOR NOMINAL MINIMAL SIZES ONLY. FINAL DIMENSIONS SHALL BE DETERMINED BY A REGISTERED STRUCTURAL ENGINEER IN THE STATE OF FLORIDA, BASED UPON FIXTURES PROVIDED. PROVIDE SIGNED, DAILED, AND SEALED PLANS FOR EACH INSTALLATION TYPE AND FIXTURE TYPE AS PART OF LIGHTING SUBMITTAL PACKAGE.
2. THE POLE AND FOUNDATION DESIGN SHALL BE BY A DELEGATED PROFESSIONAL ENGINEER TO MEET THE FOLLOWING CRITERIA:
   2.1. DESIGN WIND SPEED 160 MPH WITH A 1.3 GUST FACTOR. EXPOSURE CATEGORY C.
   2.2. SIZE EMBEDMENT FOR A MAXIMUM PERMANENT POLE DEFLECTION AFTER DESIGN WIND SPEED EVENT OF 1.00".
   2.3. ALUMINUM, ROUND OR SQUARE, TAPERED.
3. FIXTURE SHALL BE AMERICAN ELECTRIC LIGHTING ATB2 FIXTURE, 40 LED, 1000mA DRIVER, 120V, TYPE 4, WITH PHOTOCONTROL.
4. REFER TO SPECIFICATIONS SECTION 16521 "EXTERIOR LIGHTING" FOR ADDITIONAL REQUIREMENTS.
5. LIGHT FIXTURES SHALL BE MOUNTED AT 15'-0" (MAXIMUM) ABOVE FINISHED GRADE.

REVISIONS	BY

IMPROVEMENTS TO WASTEWATER COLLECTION SYSTEM
LIFT STATION CONSTRUCTION DETAILS
ELECTRICAL STANDARDS
FINAL SUBMITTAL

ECUA
EMERALD COAST UTILITIES AUTHORITY

APPROVED BY:

Drawn	
Designed	
Checked	
Date	MAY '13
Scale	
Project No	
Sheet No.	17
	OF 18 Sheets

ALL WORK SHALL BE CONSTRUCTED IN ACCORDANCE WITH THE LATEST EDITION OF THE E.C.U.A. STANDARD SPECIFICATIONS

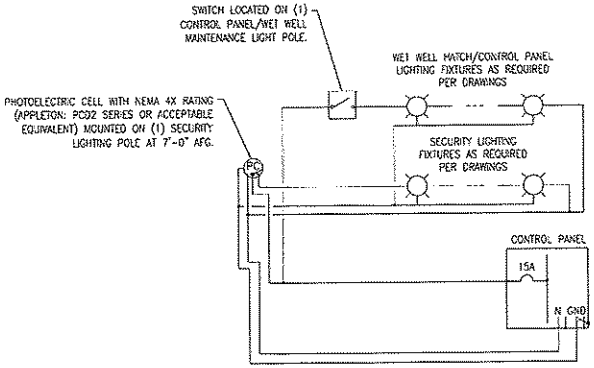

C2 TYPICAL LIGHTING CONTROL DIAGRAM

NOT TO SCALE

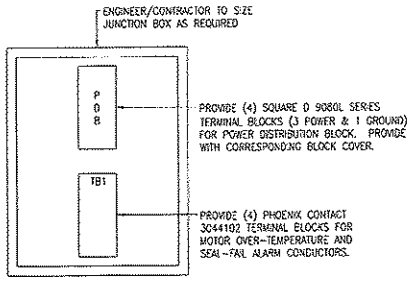

INTERIOR ELEVATION

DETAIL NOTES:

1. ALL TERMINAL BLOCKS SHALL BE PROVIDED WITH CORRESPONDING END BRACKETS AND END COVERS.
2. PROVIDE SEPARATE GROUND LUG IN EACH JUNCTION BOX, BONDED TO JUNCTION BOX.

A1 TYPICAL PUMP JUNCTION BOX ELEVATION

NOT TO SCALE

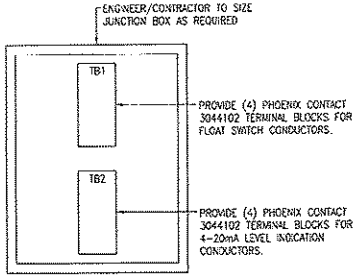

INTERIOR ELEVATION

DETAIL NOTES:

1. ALL TERMINAL BLOCKS SHALL BE PROVIDED WITH CORRESPONDING END BRACKETS AND END COVERS.
2. PROVIDE SEPARATE GROUND LUG IN EACH JUNCTION BOX, BONDED TO JUNCTION BOX.

A3 TYPICAL LEVEL INDICATION JUNCTION BOX ELEVATION

NOT TO SCALE

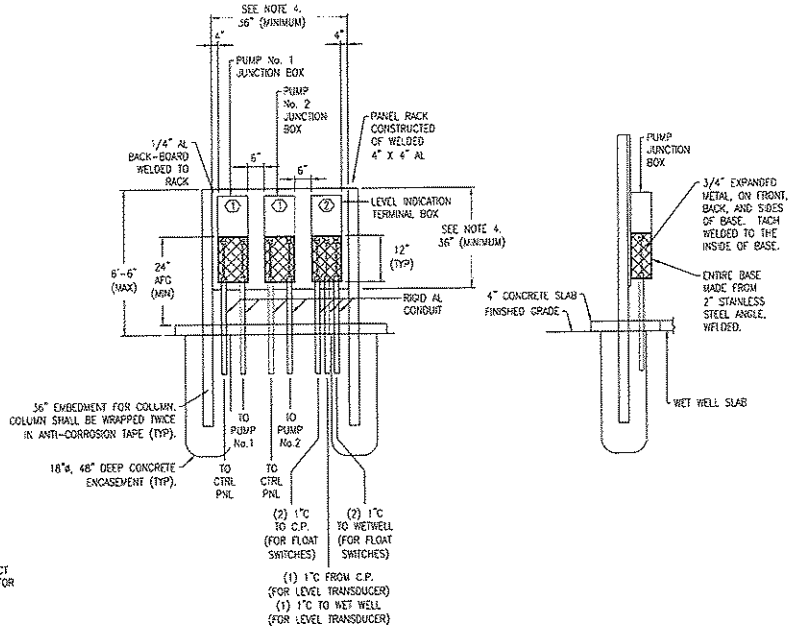

FRONT ELEVATION

SIDE ELEVATION

DETAIL NOTES:

1. THIS DETAIL SHALL ONLY APPLY WHEN THE CONTROL PANEL CANNOT BE PLACED WITHIN 6'-0" OF THE WET WELL TO ALLOW FOR CONNECTION OF STANDARD 50 FOOT PUMP CABLE CONNECTIONS.
2. BACKBOARD SHALL BE PLACED AT THE EDGE OF THE WET WELL SLAB BETWEEN THE WET WELL AND CONTROL PANEL.
3. JUNCTION BOXES SHALL BE MOUNTED SUCH THAT THEY ARE FACING THE WET WELL.
4. ENGINEER/CONTRACTOR SHALL SIZE JUNCTION BOXES AND BACKBOARDS BASED UPON INSTALLATION REQUIREMENTS PROVIDED AT TIME OF DESIGN.

KEY NOTES

1. REFER TO "TYPICAL PUMP JUNCTION BOX ELEVATION" (THIS SHEET) FOR ADDITIONAL REQUIREMENTS.
2. REFER TO "TYPICAL LEVEL INDICATION JUNCTION BOX ELEVATION" (THIS SHEET) FOR ADDITIONAL REQUIREMENTS.

A4 TYPICAL PUMP JUNCTION BOXES

NOT TO SCALE

REVISIONS	BY

IMPROVEMENTS TO WASTEWATER COLLECTION SYSTEM

LIFT STATION CONSTRUCTION DETAILS

ELECTRICAL STANDARDS

FINAL SUBMITTAL

EMERALD COAST UTILITIES AUTHORITY

APPROVED BY:

Drawn	
Designed	
Checked	
Date	MAY '13
Scale	
Project No	
Sheet No.	18
	OF 18 Sheets

ALL WORK SHALL BE CONSTRUCTED IN ACCORDANCE WITH THE LATEST EDITION OF THE E.C.U.A. STANDARD SPECIFICATIONS

480V 3ø 1HP – 60HP VARIABLE FREQUENCY DRIVE ELECTRICAL STANDARD

FOR

EMERALD COAST UTILITY AUTHORITY
ESCAMBIA COUNTY, FL

SHEET NO.	SHEET DESCRIPTION
1	MAIN POWER DISTRIBUTION SCHEMATIC
2	CONTROL SCHEMATIC
3	DIGITAL INPUTS SCHEMATIC
4	DIGITAL OUTPUTS & ANALOG INPUTS SCHEMATIC
5	ANALOG OUTPUTS & STARTER CONTROL SCHEMATIC
6	TERMINAL BLOCK LAYOUT AND FIELD CONNECTIONS
7	LINEAR EXTERIOR PANEL LAYOUT & FIELD CONDUIT REQUIREMENTS
8	POWER & PUMP 1 INTERNAL PANEL LAYOUTS
9	PUMP 2 & CONTROL PANEL INTERNAL LAYOUTS
10	EQUIPMENT LIST
11	HORSEPOWER RELATED EQUIPMENT & POWER CONDUCTORS
12	PANEL TO PANEL CONDUCTORS & EQUIPMENT
13	PANEL TO PANEL WIRING
14	LINEAR STAINLESS STEEL FRAME LAYOUT
15	TABLES, LEGENDS & TAGS
16	ISR INSTRUCTIONS
17	GENERAL NOTES AND DETAILS
18	GENERAL NOTES AND DETAILS

REVISIONS	BY

IMPROVEMENTS TO WASTEWATER COLLECTION SYSTEM

LIFT STATION CONSTRUCTION DETAILS

ELECTRICAL STANDARDS

FINAL SUBMITTAL

EMERALD COAST UTILITIES AUTHORITY

APPROVED BY:

Drawn:
Designed:
Checked:
Date: MAY '13
Scale:
Project No:
Sheet No. 0
OF 18 Sheets

ALL WORK SHALL BE CONSTRUCTED IN ACCORDANCE WITH THE LATEST EDITION OF THE E.C.U.A. STANDARD SPECIFICATIONS

VOLTS	PHASE	FREQ	FLA
480	3	60	XXX
LARGEST MOTOR			
VOLTS	PHASE	FREQ	FLA	HP
480	3	60	XXX	XX
SHORT CIRCUIT CURRENT: 10kA RMS SYMMETRICAL, 480VAC MAXIMUM			

*FOR NAMEPLATE DATA FOR EACH HORSEPOWER RATING SEE SHEET 15 'NAMEPLATE DATA' TABLE

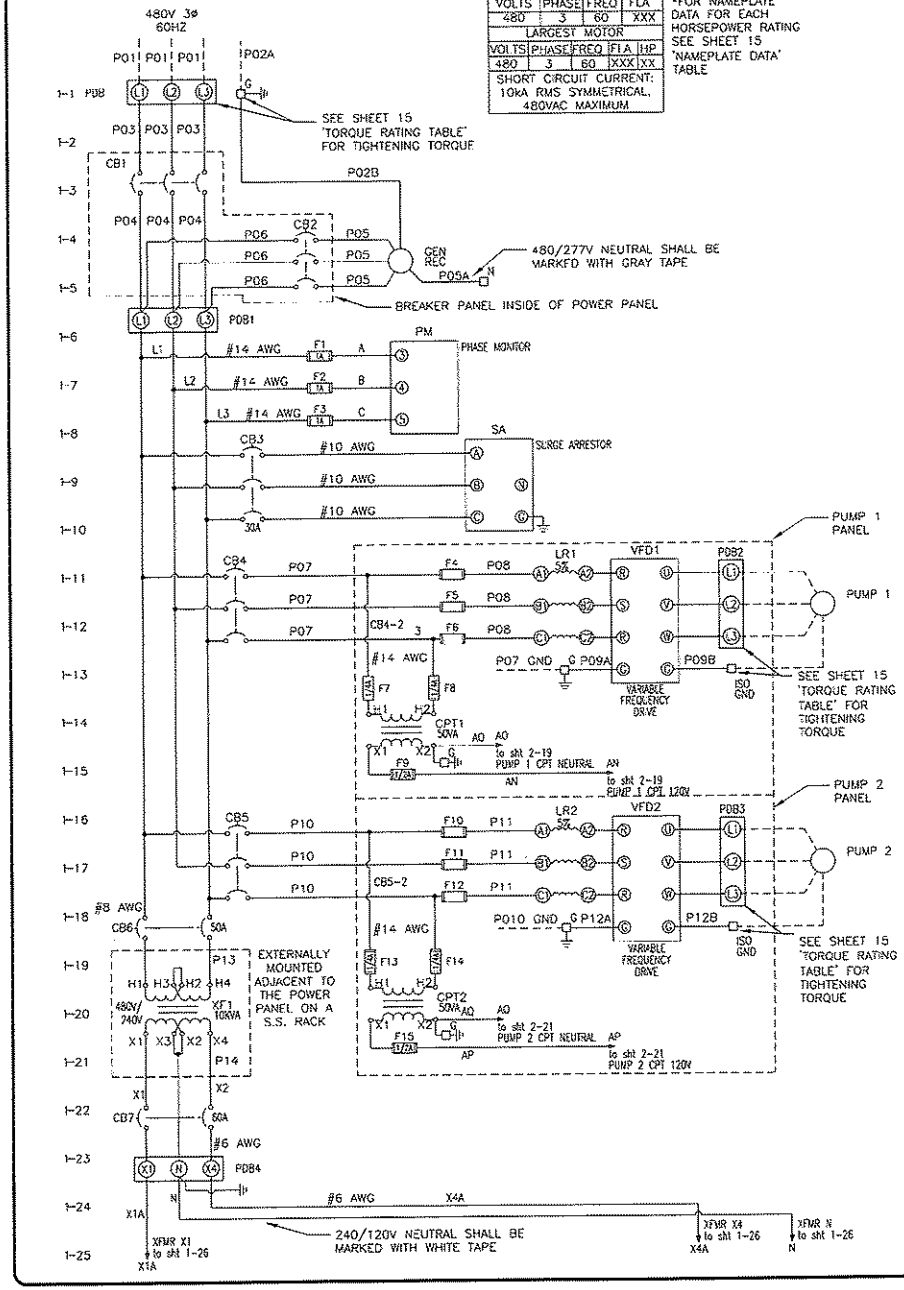

NOTES:

1. THE COMPLETED CONTROL PANEL SHALL BE LABELED AND MANUFACTURED TO MEET U.L. 508A AND 698A CERTIFICATION.
2. CONTROL PANEL WIRING SHALL BE STRANDED COPPER, MINIMUM SIZE #16 AWG WITH 600V 90DEGREE C TYPE THHN INSULATION.
3. CONTROL PANEL WIRING SHALL BE NUMBERED AT BOTH ENDS WITH TYPE WRITTEN, HEAT SHRINKABLE WIRE MARKERS.
4. ALL WIRING WITHIN THE CONTROL PANEL SHALL BE COLOR CODED OR CODED USING ELECTRICAL TAPE IN SIZES WHERE COLORED INSULATION IS NOT AVAILABLE. THE FOLLOWING CODING SHALL BE USED:
   - 4.1. UNGROUNDED AC CONDUCTORS AT SUPPLY VOLTAGE – BLACK
   - 4.2. GROUNDED AC CURRENT CARRYING CONDUCTORS – WHITE
   - 4.3. UNGROUNDED AC CONDUCTORS BELOW SUPPLY VOLTAGE – RED
   - 4.4. UNGROUNDED AC CONTROL CONDUCTORS & CONDUCTORS THAT REMAIN ENERGIZED WHEN THE MAIN DISCONNECT IS OFF – YELLOW
   - 4.5. UNGROUNDED DC CONTROL CONDUCTORS – ORANGE
   - 4.6. GROUNDED DC CURRENT CARRYING CONDUCTORS – BROWN
   - 4.7. INTRINSICALLY SAFE WIRING – BLUE
   - 4.8. GROUND CONDUCTORS – GREEN
5. SEE SHEETS 11 & 12 FOR DETAILS REGARDING ALL POWER CONDUCTORS LABELED PXX.
6. SEE SHEET 11 'HORSEPOWER RELATED COMPONENTS EQUIPMENT LIST' FOR RATINGS OF OVERCURRENT PROTECTION DEVICES.
7. SEE SHEET 6 FOR TERMINAL BLOCK DESIGNATIONS AND DESCRIPTIONS.

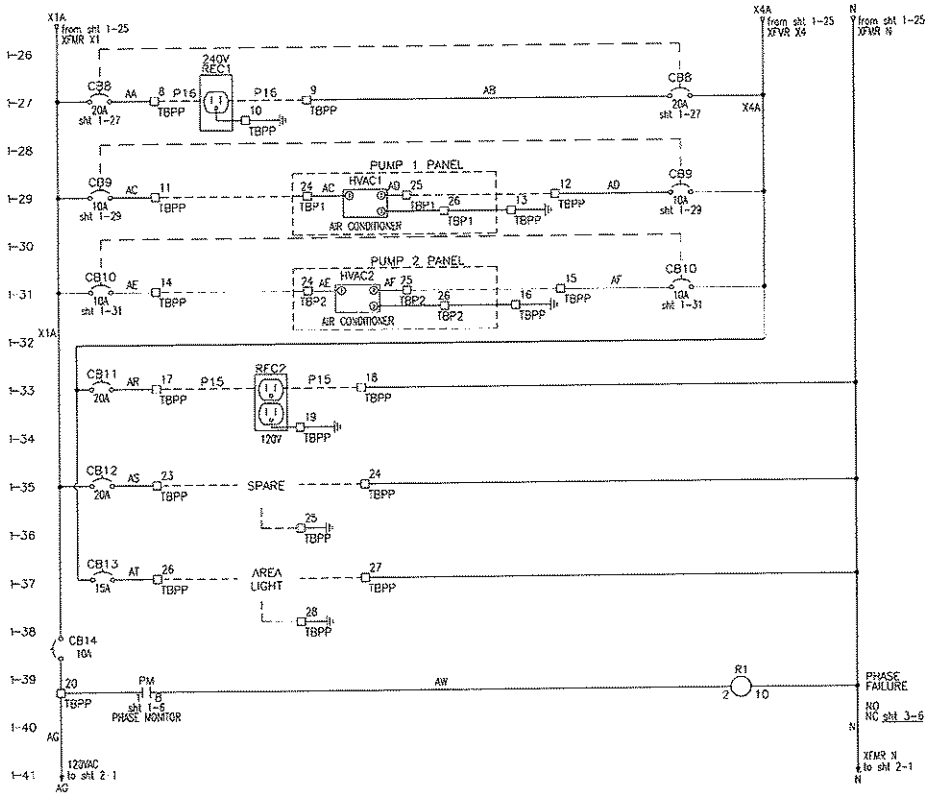

REVISIONS	BY

IMPROVEMENTS TO WASTEWATER COLLECTION SYSTEM

LIFT STATION CONSTRUCTION DETAILS

ELECTRICAL STANDARDS

FINAL SUBMITTAL

EMERALD COAST UTILITIES AUTHORITY

APPROVED BY:

Drawn:	
Designed:	
Checked:	
Date:	MAY '13
Scale:	
Project No:	
Sheet No.	1
	OF 18 Sheets

ALL WORK SHALL BE CONSTRUCTED IN ACCORDANCE WITH THE LATEST EDITION OF THE E.C.U.A. STANDARD SPECIFICATIONS

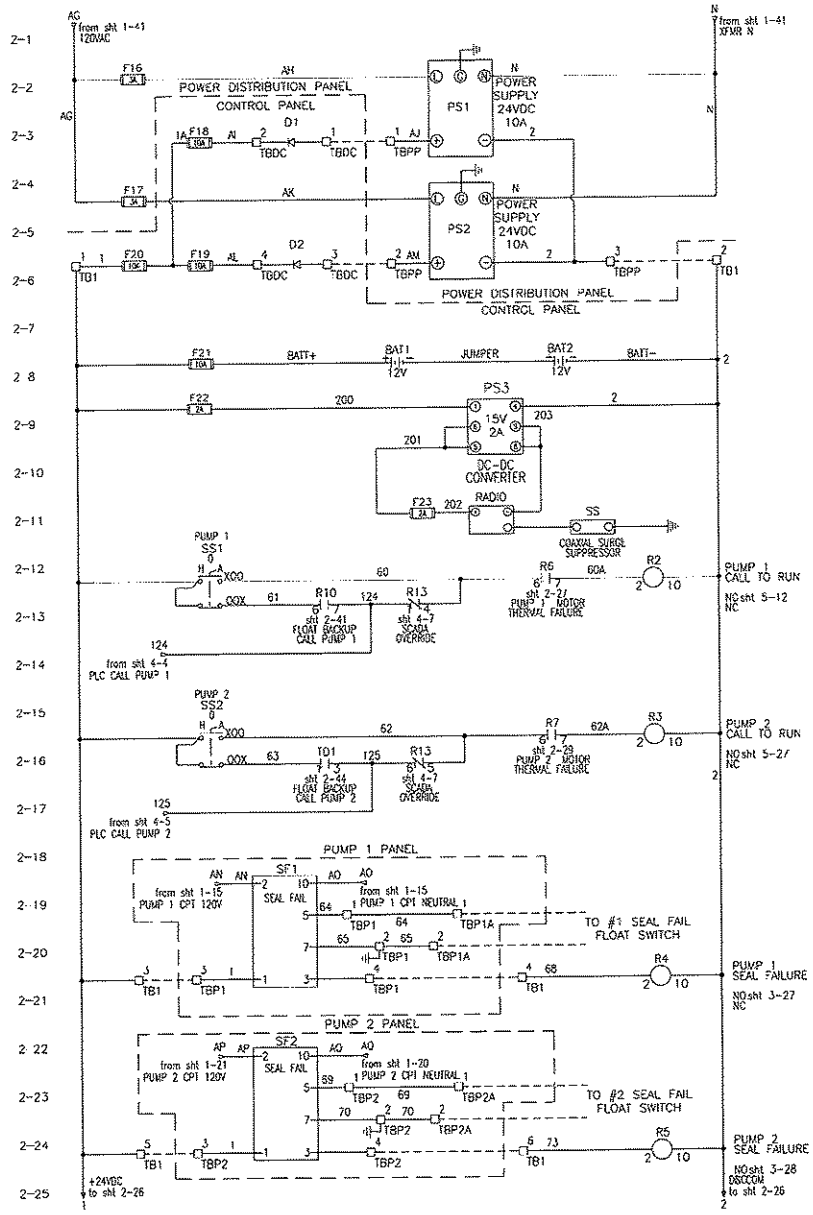

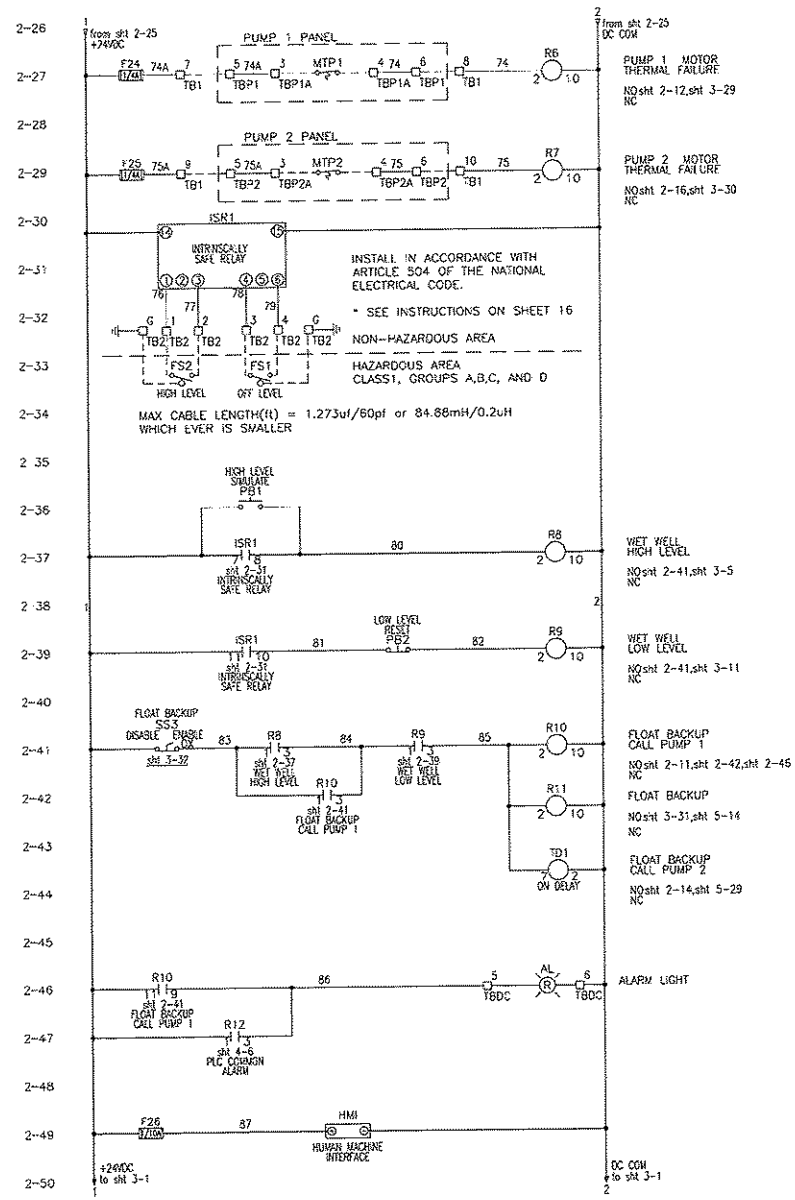

REVISIONS	BY

IMPROVEMENTS TO WASTEWATER COLLECTION SYSTEM

LIFT STATION CONSTRUCTION DETAILS

ELECTRICAL STANDARDS

FINAL SUBMITTAL

EMERALD COAST UTILITIES AUTHORITY

APPROVED BY:

Drawn:	
Designed:	
Checked:	
Date:	MAY '13
Scale:	
Project No:	
Sheet No.	2
	OF 18 Sheets

ALL WORK SHALL BE CONSTRUCTED IN ACCORDANCE WITH THE LATEST EDITION OF THE E.C.U.A. STANDARD SPECIFICATIONS

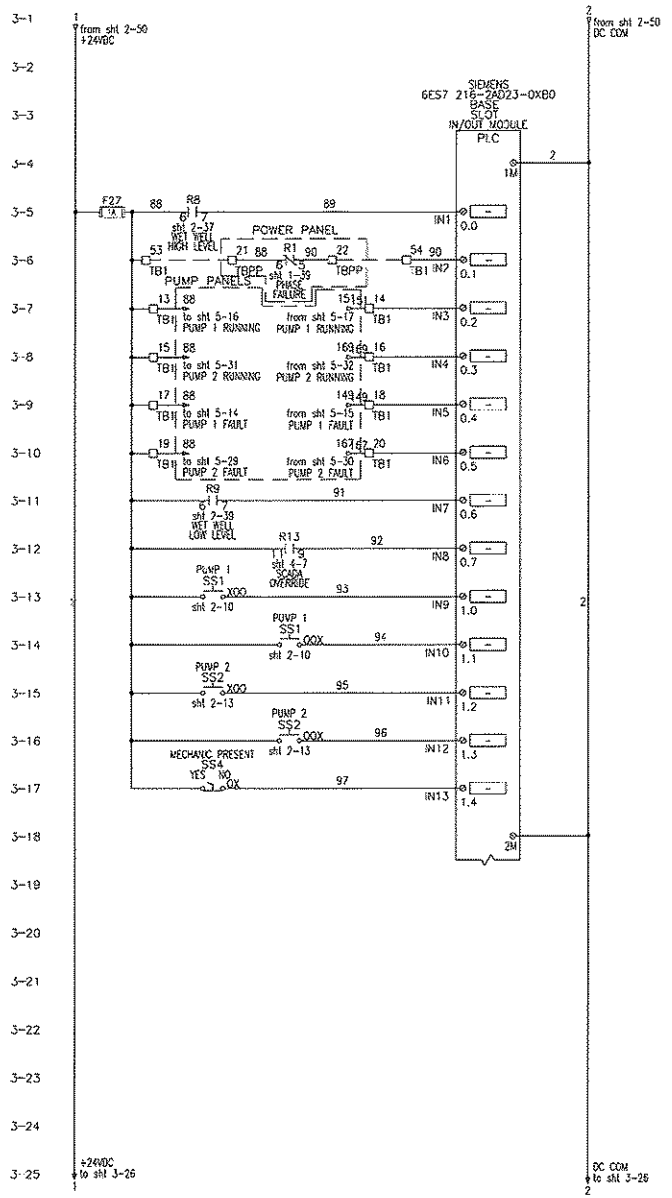

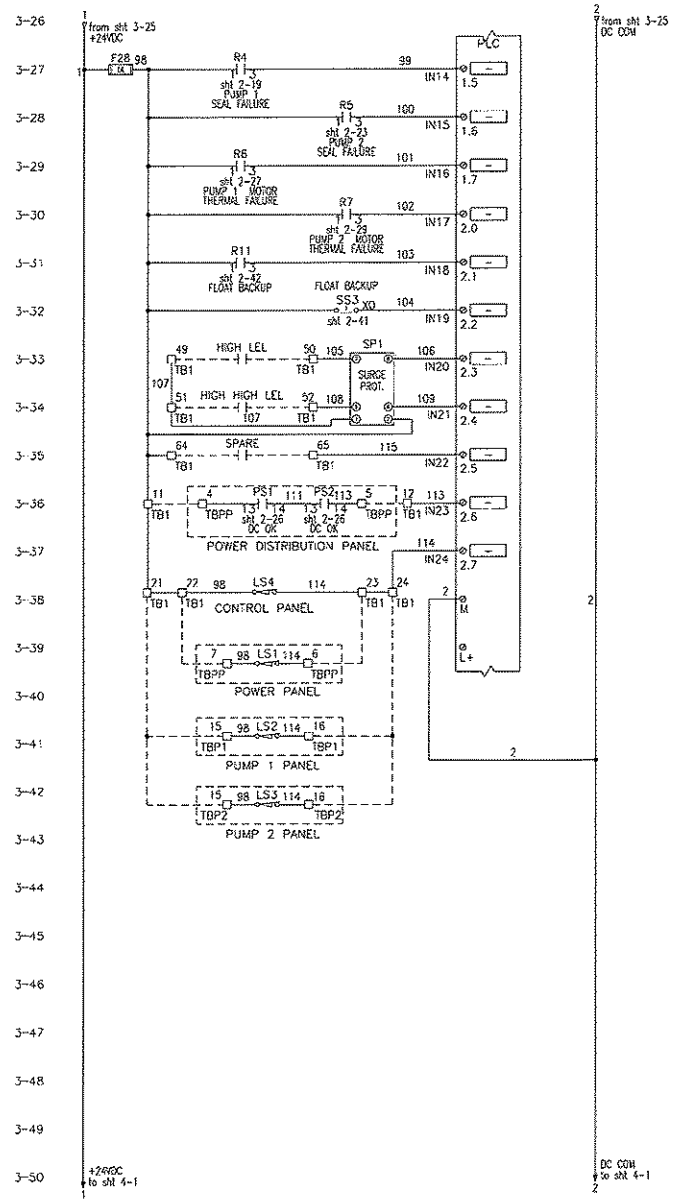

REVISIONS	BY

IMPROVEMENTS TO WASTEWATER COLLECTION SYSTEM

LIFT STATION CONSTRUCTION DETAILS

ELECTRICAL STANDARDS

FINAL SUBMITTAL

EMERALD COAST UTILITIES AUTHORITY

APPROVED BY:

Drawn:
Designed:
Checked:
Date: MAY '13
Scale:
Project No:
Sheet No. 3
Of 18 Sheets

ALL WORK SHALL BE CONSTRUCTED IN ACCORDANCE WITH THE LATEST EDITION OF THE E.C.U.A. STANDARD SPECIFICATIONS

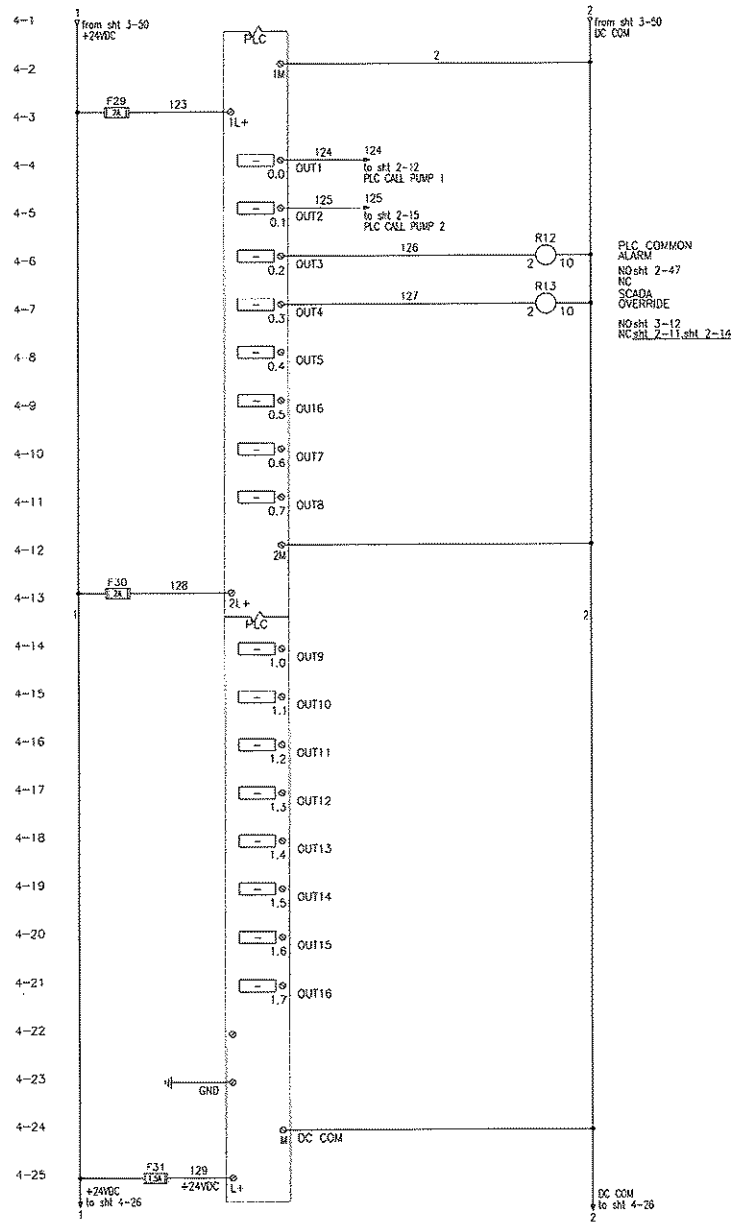

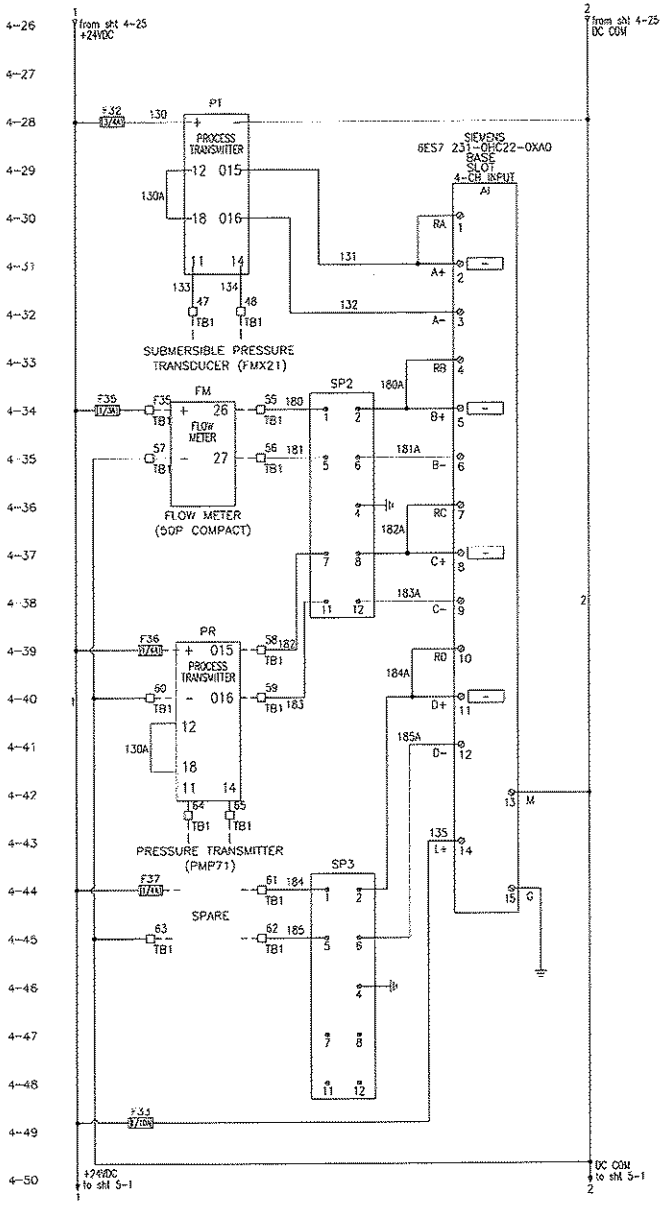

REVISIONS	BY

IMPROVEMENTS TO WASTEWATER COLLECTION SYSTEM

LIFT STATION CONSTRUCTION DETAILS

ELECTRICAL STANDARDS

FINAL SUBMITTAL

EMERALD COAST UTILITIES AUTHORITY

APPROVED BY:

Drawn:	
Designed:	
Checked:	
Date:	MAY '13
Scale:	
Project No:	
Sheet No.	4
	OF 18 Sheets

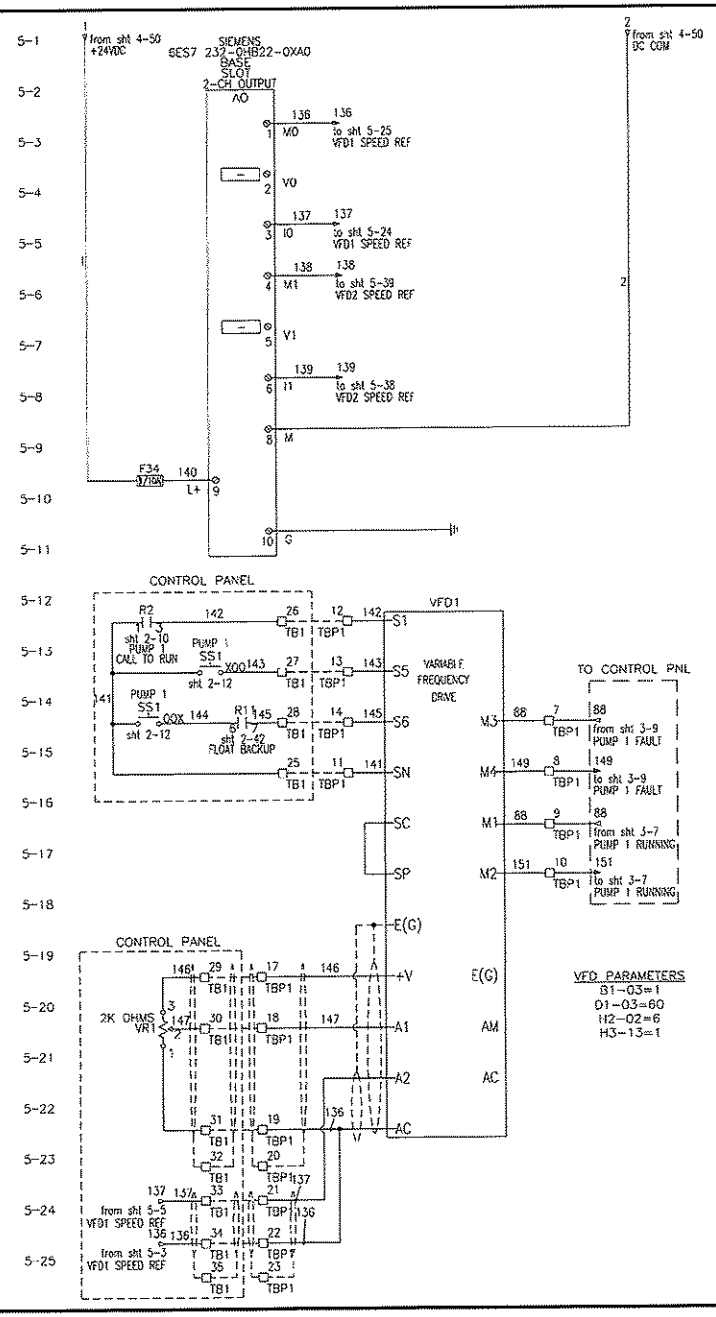

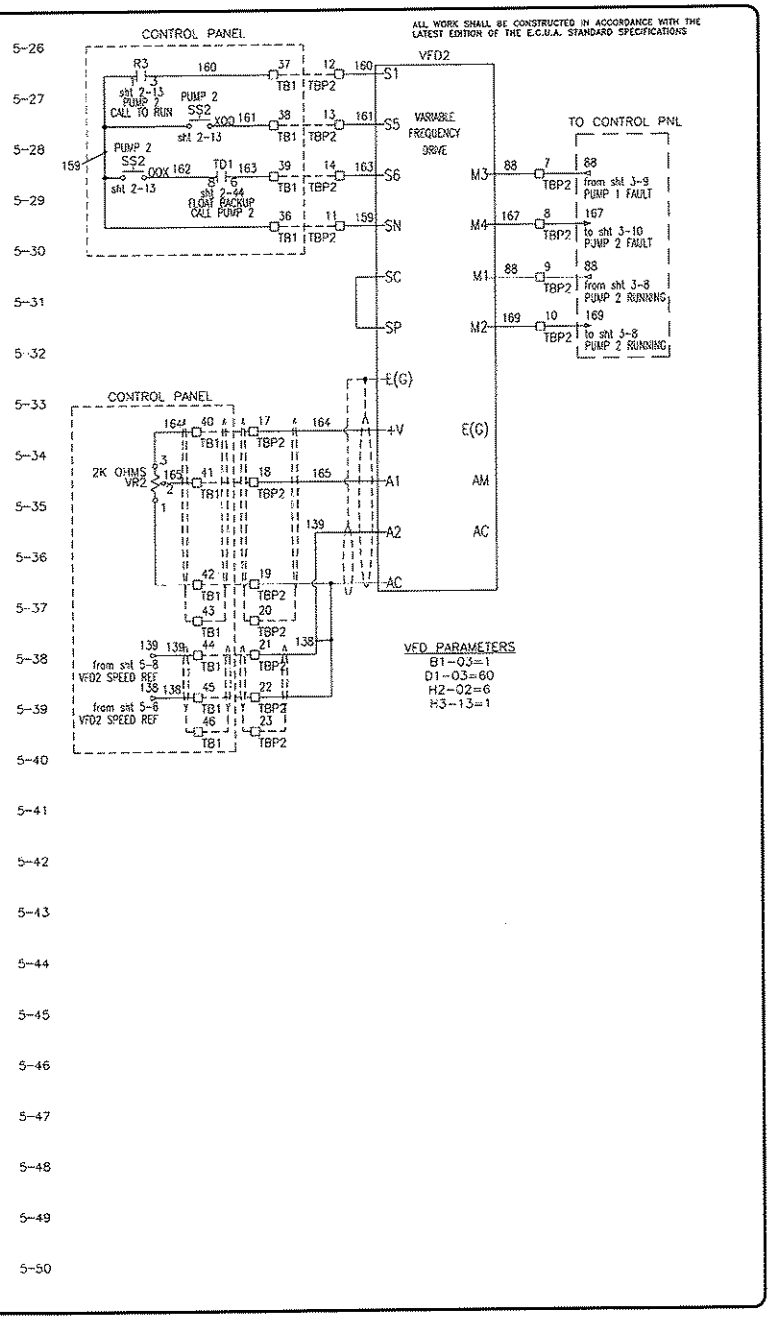

REVISIONS	BY

IMPROVEMENTS TO WASTEWATER COLLECTION SYSTEM

LIFT STATION CONSTRUCTION DETAILS

ELECTRICAL STANDARDS

FINAL SUBMITTAL

EMERALD COAST UTILITIES AUTHORITY

APPROVED BY:

Drawn:
Designed:
Checked:
Date: MAY '13
Scale:
Project No:
Sheet No. 5
OF 18 Sheets

ALL WORK SHALL BE CONSTRUCTED IN ACCORDANCE WITH THE LATEST EDITION OF THE ECUA STANDARD SPECIFICATIONS

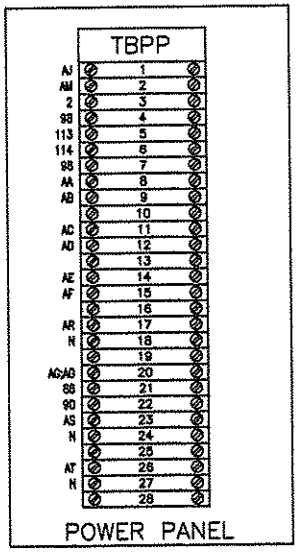

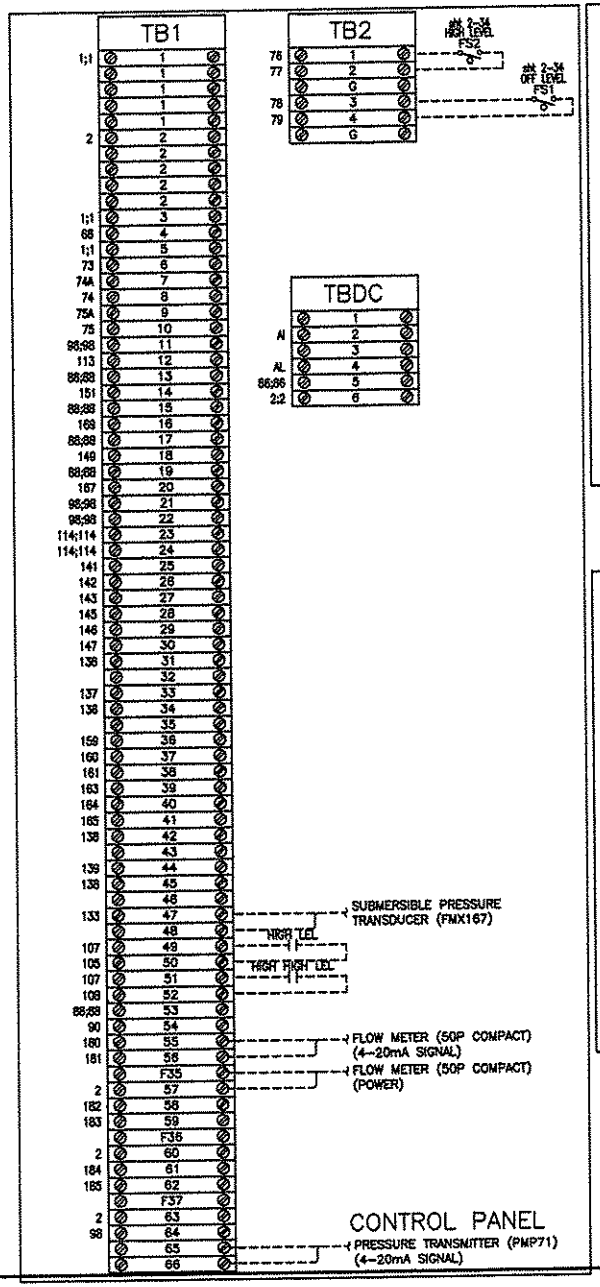

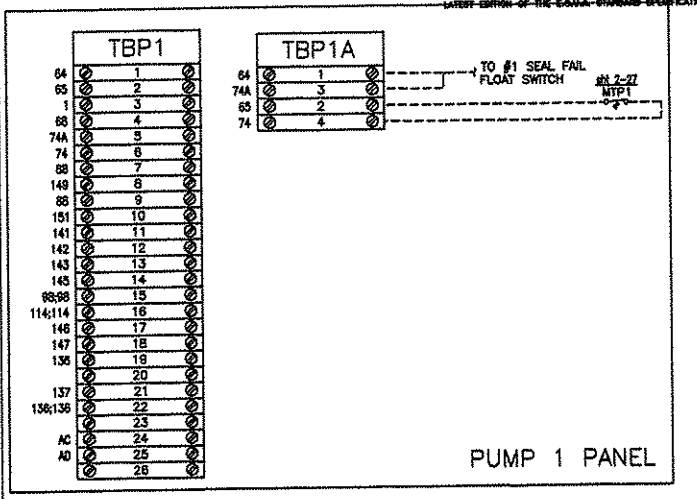

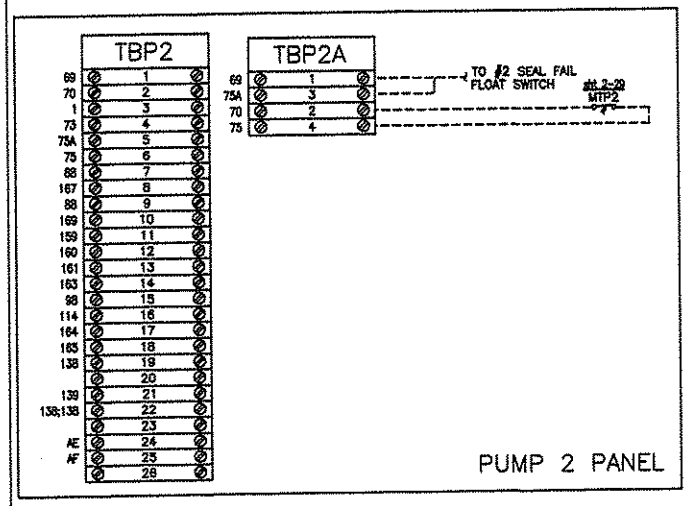

NOTES:

TERMINAL BLOCK DESIGNATIONS:

- TBPP – POWER PANEL TERMINAL BLOCK
- TB1 – CONTROL PANEL TERMINAL BLOCK
- TB2 – INTRINSICALLY SAFE TERMINAL BLOCK
- TBP1 – PUMP 1 TERMINAL BLOCK
- TBP1A – PUMP 1 TERMINAL BLOCK (MOTOR THERMAL AND SEAL FAILURE)
- TBP2 – PUMP 2 TERMINAL BLOCK
- TBP2A – PUMP 2 TERMINAL BLOCK (MOTOR THERMAL AND SEAL FAILURE)

TYPICAL FOR ALL TERMINAL BLOCKS ON THIS DRAWING

USE COPPER CONDUCTORS ONLY
75 DEG C (167 DEG F)
5.3-7.0 LB/IN TIGHTENING TORQUE

REVISIONS	BY

IMPROVEMENTS TO WASTEWATER COLLECTION SYSTEM

LIFT STATION CONSTRUCTION DETAILS

ELECTRICAL STANDARDS

FINAL SUBMITTAL

EMERALD COAST UTILITIES AUTHORITY

APPROVED BY

Drawn	
Designed	
Checked	
Date	MAY '13
Scale	
Project No	
Sheet No.	6
	OF 18 Sheets

ALL WORK SHALL BE CONSTRUCTED IN ACCORDANCE WITH THE LATEST EDITION OF THE E.C.U.A. STANDARD SPECIFICATIONS

NOTES

1. SEE SHEET 15 FOR SCHEDULES, LEGENDS AND PANEL TAGS.

ATTENTION

THIS LAYOUT IS ONE OF TWO (2) POSSIBLE CHOICES - SEE SHEET 7A FOR THE OTHER OPTION. IF THIS LAYOUT OPTION IS SELECTED, SEE SHEET 14 FOR ASSOCIATED RACK DETAILS.

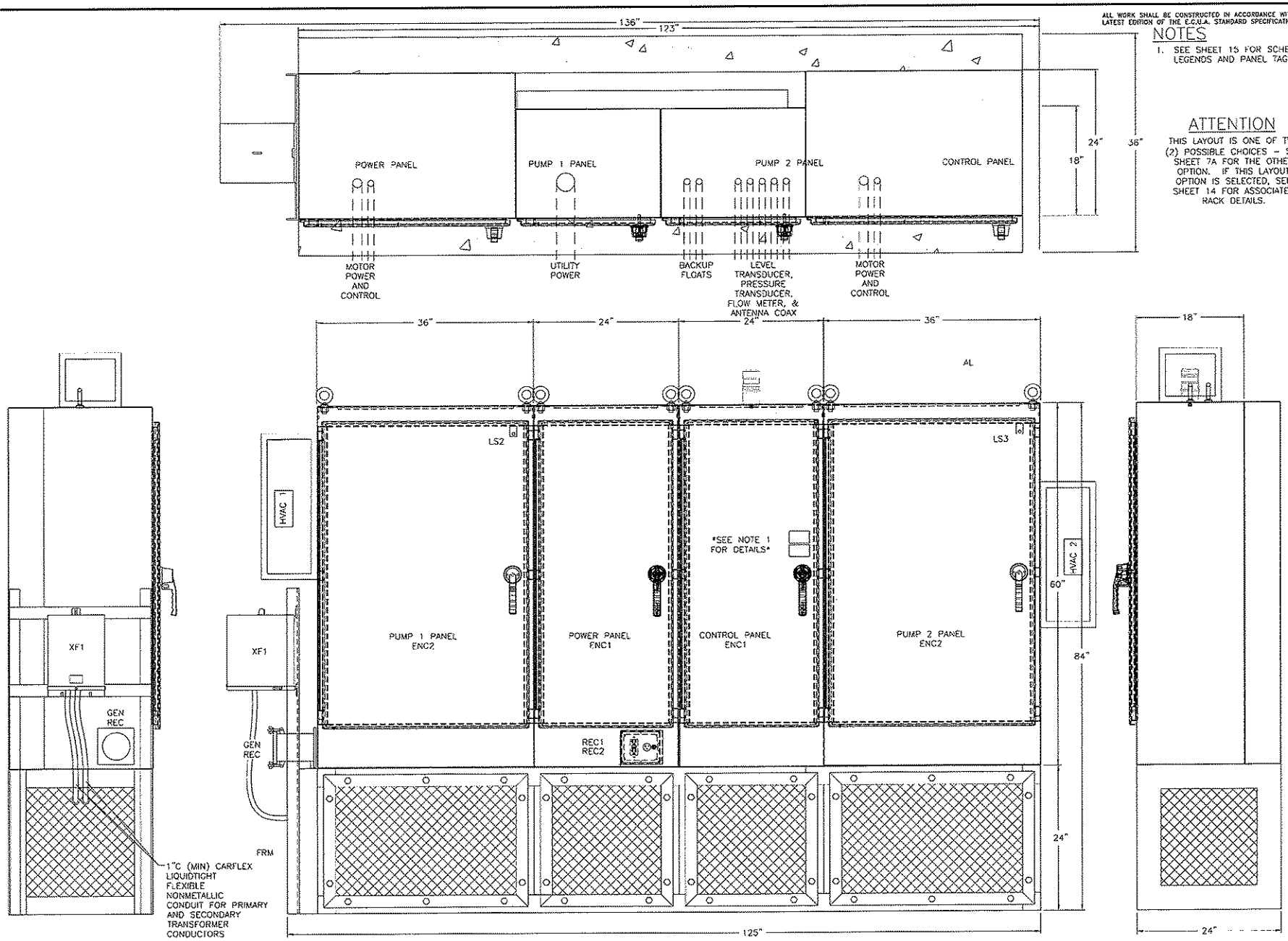

REVISIONS	BY

IMPROVEMENTS TO WASTEWATER COLLECTION SYSTEM

LIFT STATION CONSTRUCTION DETAILS

ELECTRICAL STANDARDS

FINAL SUBMITTAL

EMERALD COAST UTILITIES AUTHORITY

APPROVED BY:

Drawn:	
Designed:	
Checked:	
Date:	MAY '13
Scale:	
Project No:	
Sheet No.	7
OF	18 Sheets

ALL WORK SHALL BE CONSTRUCTED IN ACCORDANCE WITH THE LATEST EDITION OF THE E.C.U.A. STANDARD SPECIFICATIONS

NOTES

1. SEE SHEET 15 FOR SCHEDULES, LEGENDS AND PANEL TAGS.
2. LAYOUT OF THE POWER & VFD SECTIONS DEPICTS THE LARGEST POSSIBLE HORSEPOWER CONFIGURATION.

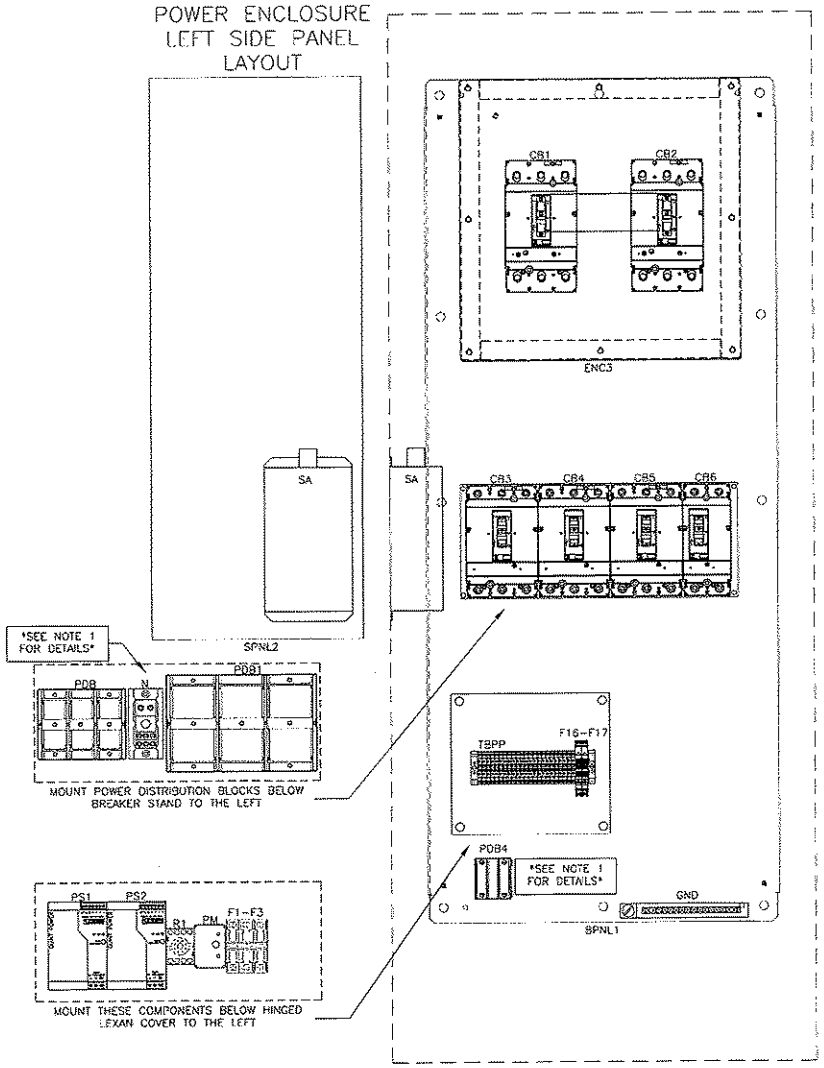

POWER ENCLOSURE BACKPANEL LAYOUT

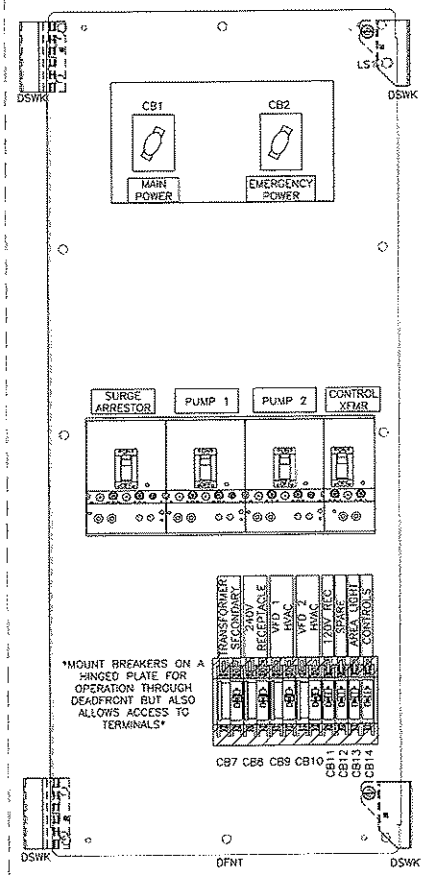

POWER ENCLOSURE DEADFRONT LAYOUT

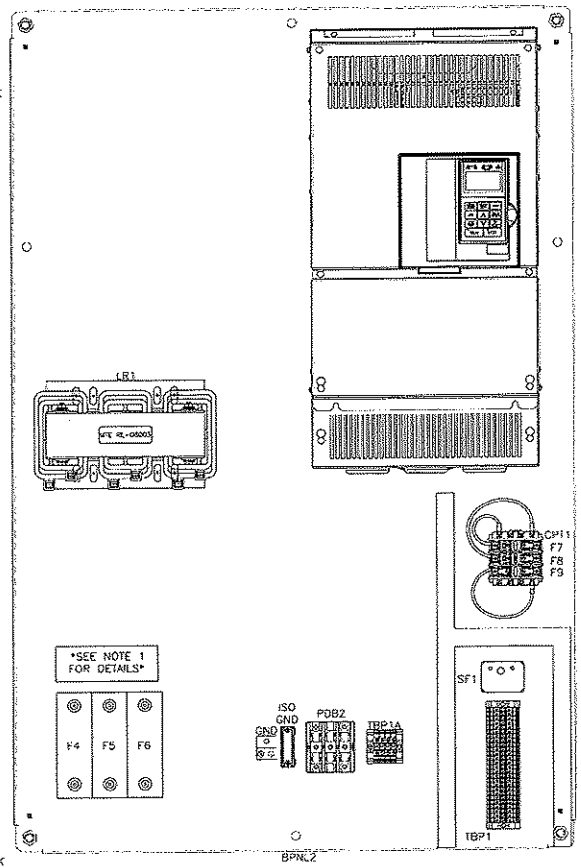

PUMP 1 ENCLOSURE BACKPANEL LAYOUT

REVISIONS	BY

IMPROVEMENTS TO WASTEWATER COLLECTION SYSTEM

LIFT STATION CONSTRUCTION DETAILS

ELECTRICAL STANDARDS

FINAL SUBMITTAL

EMERALD COAST UTILITIES AUTHORITY

APPROVED BY:

Drawn:	
Designed:	
Checked:	
Date:	MAY '13
Scale:	
Project No:	
Sheet No.	8
OF 18 Sheets	

ALL WORK SHALL BE CONSTRUCTED IN ACCORDANCE WITH THE LATEST EDITION OF THE E.C.U.A. STANDARD SPECIFICATIONS

NOTES

1. SEE SHEET 15 FOR SCHEDULES, LEGENDS AND PANEL TAGS.
2. LAYOUT OF THE VFD SECTION DEPICTS THE LARGEST POSSIBLE HORSEPOWER CONFIGURATION.

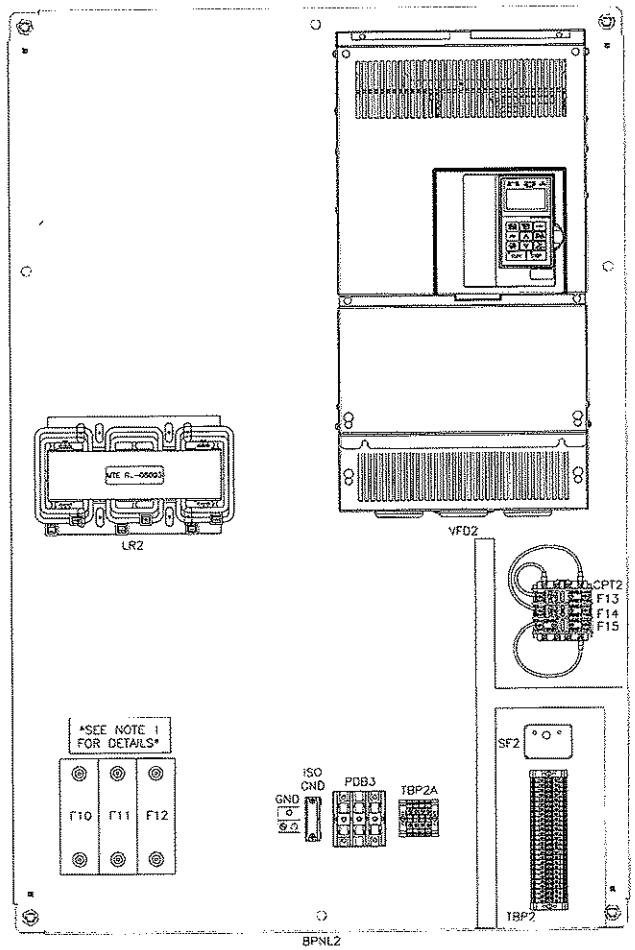

PUMP 2 ENCLOSURE BACKPANEL LAYOUT

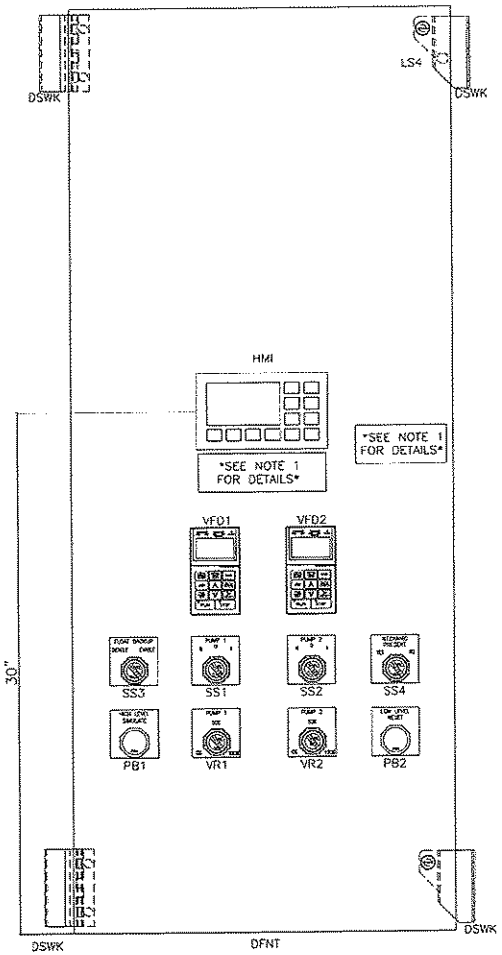

CONTROL PANEL DEADFRONT LAYOUT

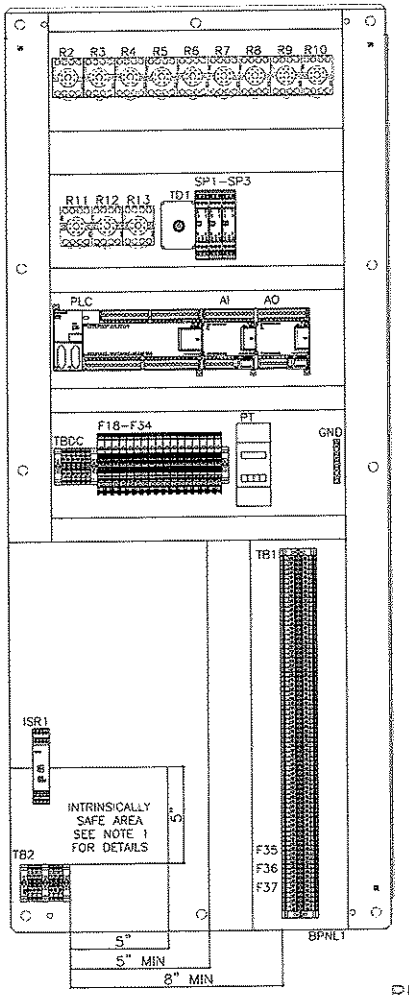

CONTROL ENCLOSURE BACKPANEL LAYOUT

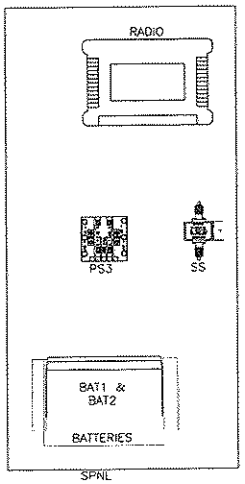

CONTROL ENCLOSURE RIGHT SIDEPANEL LAYOUT

REVISIONS	BY

IMPROVEMENTS TO WASTEWATER COLLECTION SYSTEM

LIFT STATION CONSTRUCTION DETAILS

ELECTRICAL STANDARDS

FINAL SUBMITTAL

EMERALD COAST UTILITIES AUTHORITY

APPROVED BY:

Drawn:
Designed:
Checked:
Date: MAY '13
Scale:
Project No:
Sheet No. 9
OF 18 Sheets

480V VFD Equipment List

Item	Tag	Panel	Description	Manufacturer	Model	Qty
1	ENC1	Power & Control	60X24X18 NEMA 4X SS Enclosure	Hoffman	A60X24188SFSN4	2
2	BPNL1	Power & Control	60x24 Painted Steel Backpanel	Hoffman	A60P24F1	2
3	ENC2	Pump 1 & 2	60X36X24 NEMA 4X SS Enclosure	Hoffman	A60X36245SFSN4	2
4	BPNL2	Pump 1 & 2	60x36 Painted Steel Backpanel	Hoffman	A60P36F1	2
5	SPNL	Control	28"H x 12"W Aluminum Sidepanel	EWS	Custom	1
6	DFNT	Power & Control	60x24 Aluminum Deadfront Panel	EWS	Custom	2
7	DSWK	Power & Control	Door Swing Kit	Hoffman	ANADFK	2
8	FRM	All	Expanded Metal Stainless Steel Frame	EWS	See Drawings	1
9	PDB	Power	Incoming Power Distribution Block PDB	Square D	SEE HP TABLE SHEET 11	1
10	PDB	Power	Incoming Power Distribution Block PDB Cover	Square D	SEE HP TABLE SHEET 11	1
11	GND	Power	Power Panel Ground Bar	Square D	PK1SGTA-L	1
12	ENC3	Power	16"H x 16"W x 8"D Screw Cover Type 3R Enclosure	Hoffman	A16168SSC	1
13	CB1	Power	600V Main Circuit Breaker	Square D	SEE HP TABLE SHEET 11	1
14	CB2	Power	600V Emergency Circuit Breaker	Square D	SEE HP TABLE SHEET 11	1
15	CB1,CB2	Power	Mechanical Interlock for H/J Frame Circuit Breakers	Square D	S29369	1
16	CB1,CB2	Power	Door Mounted Rotary Handle for H/J Frame Circuit Breakers	Square D	S29338	2
17	GEN REC	Power	NEMA 4X Generator Receptacle	Appleton	SEE HP TABLE SHEET 11	1
18	GEN REC	Power	NEMA 4X Generator Plug (Ship Loose)	Appleton	SEE HP TABLE SHEET 11	1
19	PDB1	Power	Main Power Distribution Block	Square D	SEE HP TABLE SHEET 11	1
20	PDB1	Power	Main Power Distribution Block Cover	Square D	SEE HP TABLE SHEET 11	1
21	F1-F3	Power	3 Pole Rejection type Fuse Block	Bussmann	BC6033FQ	1
22	F1-F3	Power	1A Rejection Type Fuse, Class CC	Bussmann	KTK-R-1	3
23	F1-F3	Power	Fuse Cover	Bussmann	SAMI-7N	3
24	PM	Power	480V Phase Monitor	Timermark	A257B	1
25	PM	Power	480V, 8-Pin Relay Base	ABB	OT08PC	1
26	CB3-CB6	Power	Breaker Stand	EWS	Custom	1
27	CB3	Power	30A 480V 3 Pole Circuit Breaker, Main Surge Arrestor	Square D	HDL36030	1
28	SA	Power	Main Surge Arrestor	SSI	SDLA3N4	1
29	CB4, CB5	Power	600V 3 Pole Circuit Breaker, VFD	Square D	SEE HP TABLE SHEET 11	2
30	CB4,CB5	Power	H & J Frame Circuit Breaker Locking System	Square D	S29371	2
31	F4-F6, F10-F12	Pump 1 & 2	Semiconductor Fuse	Ferraz Shawmut	SEE HP TABLE SHEET 11	6
32	F4-F6, F10-F12	Pump 1 & 2	Semiconductor Fuse Block	Ferraz Shawmut	SEE HP TABLE SHEET 11	6
33	LR1, LR2	Pump 1 & 2	5% Line Reactor	MTE	SEE HP TABLE SHEET 11	2
34	VFD1, VFD2	Pump 1 & 2	480V Variable Frequency Drive	Yaskawa	SEE HP TABLE SHEET 11	2
35	VFD1, VFD2	Control	Remote Operator Kit for Yaskawa P7 VFD	Yaskawa	UUX000444	2
36	GND	Pump 1 & 2	Power Panel to Starter Panels Ground	NSI	2-OT	2
37	PDB2, PDB3	Pump 1 & 2	Motor Power Distribution Block, (1)#14-2/0.....(1)#14-2/0	Square D	9080LBA362101	2
38	PDB2, PDB3	Pump 1 & 2	Motor Power Distribution Block Cover	Square D	9080LB23	2
39	F7, F8, F13, F14	Pump 1 & 2	1/4A Rejection Type Fuse, VFD CPT Primary	Bussmann	FNQ-R-1/4	4
40	CPT1, CPT2	Pump 1 & 2	480/120V 50VA Transformer	Square D	9070TF50D1	2
41	CPT1, CPT2	Pump 1 & 2	Transformer Finger Safe Cover, VFD CPT Primary	Square D	9070FSC-1	2
42	CPT1, CPT2	Pump 1 & 2	Fuse Puller, VFD CPT	Square D	9070FP-1	2
43	F9, F15	Pump 1 & 2	1/2A Fuse, VFD CPT Secondary	Bussmann	FNQ-1/2	2
44	CB6	Power	50A 480V 2 Pole Circuit Breaker, XF1 Transformer Primary	Square D	HDL26050	1
45	XF1	Power	10kVA 480V/240-120V Transformer, NEMA 3R Stainless Steel	Square D	1051FSS	1
46	CB7-CB13	Power	Hinged Aluminum Bracked for Mounting 240/120V Circuit Breakers through Deadfront	EWS	Custom	1
47	CB7	Power	60A 240/120V 2 Pole Circuit Breaker, XF1 Transformer Secondary	Square D	QOU260	1
48	PDB4	Power	240V/120V Power Distribution Block PDB4, (1) #14-2 ... (4) #18-10	Square D	9080LBA361104	1
49	CB8	Power	20A, 240V, 2 Pole Circuit Breaker	Square D	QOU220	1
50	REC1	Power	20A, 250V, 6-20R Receptacle	P&S	5872I	1
51	CB9, CB10	Power	10A, 240V, 2 Pole Circuit Breaker	Square D	QOU210	2
52	HVAC1, HVAC2	Pump 1 & 2	240V NEMA 4X Air Conditioner *HVAC Selection based on HP size and Panel Layout*	Icecube	SEE HP TABLE SHEET 11	2
53	CB11, CB12	Power	20A, 120V 1 Pole Circuit Breaker	Square D	QOU120	2
54	REC2	Power	120V 20A GFCI Duplex Receptacle NEMA5-20R	P&S	2094-I	1
55	REC1, REC2	Power	Custom Receptacle Cover NEMA 4X S.S.	HOFFMAN	HIORPSS-MOD	1
56	REC1, REC2	Power	3/4 1G AL FD BOX	Appelton	4CS-1/2	2
57	CB13	Power	15A, 120V, 1 Pole Circuit Breaker	Square D	QOU115	1
58	CB14	Power	10A, 120V, 1 Pole Circuit Breaker	Square D	QOU110	1
59	R1	Power	120V 3PDT General Purpose Relay w/ Indicator Lamp	Potter Brumfield	KRPA-14AN-120	1
60	R1-R13, SF1, SF2	All	11 Pin Relay Base	ABB	NDS-11	15
61	F16, F17	Power	Fused Terminal Block w/ 120V Blown Fuse Indication	Allen Bradley	1492-H4	2
62	-	Power & Control	1492-H4 RHS Fused Terminal Block End Cover	Allen Bradley	1492-N37	2
63	F16, F17	Power	3A Fuse, Power Supply Primary	Bussmann	AGC-3	2
64	PS1, PS2	Power	10A 24VDC Power Supply	Phoenix Contact	2938604	2
65	D1, D2	Power	10A Diode, P1000A	Newark	51R7094	2
66	-	Control	Custom Stand/Lexan Hinged Cover w/Alum Stand for TBPP & Power Supply Fuses	EWS	Custom	1
67	F18-F37	Control	Fused Terminal Block w/ 24VDC Blown Fuse Indication	Allen Bradley	1492-H5	17
68	F18-F21	Control	10A Fuse, Power Supply Secondary & Batteries	Bussmann	AGC-10	4

480V VFD Equipment List

ALL WORK SHALL BE CONSTRUCTED IN ACCORDANCE WITH THE LATEST EDITION OF THE C.G.U.A. STANDARD SPECIFICATIONS

Item			Description	Manufacturer	Model	Qty
69	BAT1, BAT2	Control	12VDC Battery	Power Sonic	PS1290	2
70	PS3	Control	24VDC-15VDC Converter, 2A	Vicor	V1-J12-EY-B1	1
71	RADIO	Control	400MHz Radio	GE MDS	5004MD	1
72	RADIO	Control	DB9 Male/Male Gender Changer	Office Depot	946660	1
73	RADIO/SS	Control	3 Foot LMR400UF Coaxial Jumper NMale to TNCMale	Tessco	324503	1
74	SS	Control	Coaxial Surge Suppressor, 50-700MHz	Polyphaser	IS-50NX-C1	1
75	-	Control	50FT Coaxial Cable, NMale-Nmale, Wireless Solutions 400-07-07-P50 (Ship Loose)	Tessco	370875	1
76	-	-	400MHz Yagi Antenna w/ N Female Connector, MAXRAD MYA450N (Ship Loose)	Tessci	37634	1
77	-	-	Antenna Tower 5' Base Section, ROHN R-SB25GS (Ship Loose)	Tessco	64559	1
78	-	-	Antenna Tower 10' Mid Section, ROHN R-25G (Ship Loose)	Tessco	56866	1
79	-	-	Antenna Tower 9' Top Section, ROHN R-25AG2 (Ship Loose)	Tessco	70080	1
80	-	-	21' 1-1/4" S.S. Antenna Mast (Ship Loose)	Bell Steel	023008	1
81	F24, F25	Control	1/4A Fuse	Bussmann	AGC-1/4	2
82	F22, F23, F29, F30	Control	2A Fuse	Bussmann	AGC-2	4
83	SS1, SS2	Control	3 Position Selector Switch, 30MM	Square D	9001SK343BH2	2
84	R2-R13	Control	24VDC 3PDT General Purpose Relay w/ Indicator Lamp	Potter Brumfield	KRPA-14DN-24	12
85	SF1, SF2	Control	120V Seal Failure Relay	ATC	SFM-120-AAA-10K	2
86	ISR1	Control	Intrinsically Safe Barrier Relay, 24VDC	Pepperl & Fuchs	KFD2-SR2-Ex2.W	1
87	TB2	Control	Terminal Block, Blue TB2	Phoenix Contact	3044115	4
88	TB2	Control	Terminal Block, Blue End Barrier, TB2	Phoenix Contact	3047235	1
89	TB2	Control	Ground Terminal Blocks, TB2	Phoenix Contact	3044128	2
90	PB1, PB2	Control	Push Button, Black 1NO 1NC	Square D	9001SKR1BH13	2
91	SS3, SS4	Control	2 Position Selector Switch, 30MM	Square D	9001SK11BH2	2
92	TD1	Control	24VDC 0-180 Second Time Delay Relay	Square D	RE48ATM12MW	1
93	TD1	Control	8 Pin Relay Base	ABB	NDS-8	1
94	AL	Control	24VDC Red Alarm Light	Federal Signal	LP3M-012-048R	1
95	F26, F33, F34	Control	1/10A Fuse	Bussmann	AGC-1/10	3
96	HMI	Control	TD400C Text Display	Siemens	6AV6 640-0AA00-0AX1	1
97	F27, F28	Control	1A Fuse	Bussmann	AGC-1	2
98	PLC	Control	S7-200 Dual Com Port Processor w/ 24 DI & 16 DO Points	Siemens	6ES7 216-2AD23-0XB0	1
99	AI	Control	S7-200 4 Point AI Module	Siemens	6ES7 231-0HC22-0XA0	1
100	AO	Control	S7-200 2 Point AO Module	Siemens	6ES7 232-0HB22-0XA0	1
101	PLC	Control	S7-200 Communication cable PC/PPI RS-232/485	Siemens	6ES7 901-3CB30-0XA0	1
102	SP1-SP3	Control	Plug In DI Surge Suppression, PT 4x1...DC	Phoenix Contact	2838322	3
103	SP1-SP3	Control	Terminal Block Base for Pluggable Surge Supression, PT 4x1-BE	Phoenix Contact	2839363	3
104	LS1-LS4	Control	Panel Intrusion Switches, N.C. Contacts	NSI	76030PS	4
105	F31	Control	1-1/2A Fuse	Bussmann	AGC-1-1/2	1
106	F32	Control	3/4A Fuse	Bussmann	AGC-3/4	1
107	PT	Control	Level Transmitter	Endress & Hauser	RMA42AAAH2	2
108	PT	-	Submersible Level Transducer, 20ft Range w/ 60ft Cable & Mounting Clamp (Ship Loose)	Endress & Hauser	FMX21-FE221GGE21APO	1
109	F35-F37	Control	24VDC Fused Terminal Block With Indication	Phoenix Contact	3046090	3
110	F35-F37	Control	1/4A Fuse	Bussmann	GMA-250	3
111	VR1, VR2	Control	2K Ohm Potentimeter	Square D	9001SK2139	2
112	TBPP,1,DC,P1 & 1A, P2 & 2A	All	Terminal Block, Gray 26-10 AWG Wire	Phoenix Contact	3044102	161
113	TBPP,1,DC,P1 & 1A, P2 & 2A	All	Terminal Block End Barrier	Phoenix Contact	3047028	8
114	TBPP,1,DC,P1 & 1A, P2 & 2A	All	Terminal Block End Anchor	Phoenix Contact	0800886	17
115	TBP1A, TBP2A	Pump 1 & 2	Terminal Block, Gray 26-8 AWG Wire	Phoenix Contact	3044131	8
116	GND	Control	Control Panel Ground Bar	Square D	PK5GTA	1
117	VFD1, VFD2	Pump 1, 2 & Control	RJ45 Connector for non-shielded CAT 6 Cable	Tessco	355847	4
118	-	-	Meter Socket (SHIP LOOSE)	Milbank	SEE HP TABLE SHEET 11	1
119	-	-	Stainless Steel 60' Float (SHIP LOOSE)	Anchor Scientific	P60NO-SST	2
120	-	-	Insulated Ground Neutral (SHIP LOOSE)	Square D	SN400LA	1
121	-	-	Ground Bar Kit (SHIP LOOSE)	Square D	PKDGT/250	1
122	-	-	NEMA 4A S.S. Disconnect (SHIP LOOSE)	Square D	J250DS	1
123	-	-	Antenna Mast Stabilization Plate (Ship Loose)	EWS	Custom	1
124	-	-	Stainless Steel 'U' Bolt, 2" Pole, 5/16" Diameter Bolt w/ 2-1/2" Threads (SHIP LOOSE)			1
125	-	-	5/16" Stainless Steel Flat Washer for 'U' Bolt (SHIP LOOSE)			2
126	-	-	5/16" Stainless Steel Lock Washer for 'U' Bolt (SHIP LOOSE)			2
127	-	-	5/16" Stainless Steel Nut for 'U' Bolt (SHIP LOOSE)			2
128	-	-	Stainless Steel 'U' Bolt, 1/4" Diameter (SHIP LOOSE)			2
129	-	-	1/4" Stainless Steel 1/4" Nut for 'U' Bolt (SHIP LOOSE)			4
130	-	-	1-1/4" Reduction Bushing for Antenna Tower, ROHN R-TB50 (SHIP LOOSE)	Tessco	36882	1
131	PLC	Control	S7-200 Memory Module	Siemens	6ES7 2918GF230AX0	1
132	ISO GND	Pump 1 & 2	Motor Isolated Ground Lug	Square D	9080LBA161101	2
133	N	Power	Generator Neutral Block, (1)#6-400kcmil ... (6)#14-2	Square D	9080LBA163106	1
134	N	Power	Generator Neutral Block Cover	Square D	9080LB31	1
135	SPNL2	Power	32"x12" Aluminum Sidepanel	EWS	Custom	1
136	FM	Control	Flow Meter	Endress & Hauser	50P Compact	1
137	PR	Control	Pressure Transmitter	Endress & Hauser	PMP71-AAC1PG1RAA	1

REVISIONS	BY

IMPROVEMENTS TO WASTEWATER COLLECTION SYSTEM

LIFT STATION CONSTRUCTION DETAILS

ELECTRICAL STANDARDS

FINAL SUBMITTAL

EMERALD COAST UTILITIES AUTHORITY

APPROVED BY:

Drawn:	
Designed:	
Checked:	
Date:	MAY '13
Scale:	
Project No:	
Sheet No:	10
	Of 18 Sheets

ALL WORK SHALL BE CONSTRUCTED IN ACCORDANCE WITH THE LATEST EDITION OF THE E.C.U.A. STANDARD SPECIFICATIONS

Horsepower Related Compontents Equipment List

Item	Tag	Horsepower 1	2	3	5	7.5	10	15	20	25	30	40	50	60
Incoming Power Distribution Block	PDB	9080LBA362101	9080LBA362101	9080LBA362101	9080LBA362101	9080LBA362101	9080LBA362101	9080LBA362101	9080LBA362101	9080LBA363101	9080LBA363101	9080LBA363101	9080LBA363101	9080LBA363101
Incoming Power Distribution Block Cover	PDB	9080LB23	9080LB23	9080LB23	9080LB23	9080LB23	9080LB23	9080LB23	9080LB23	9080LB33	9080LB33	9080LB33	9080LB33	9080LB33
Main Circuit Breaker	CB1	HDL36040	HDL36040	HDL36040	HDL36050	HDL36070	HDL36080	HDL36100	HDL36110	HDL36150	JDL36175	JDL36200	JDL36225	JDL36250
Emergency Circuit Breaker	CB2	HDL36040	HDL36040	HDL36040	HDL36050	HDL36070	HDL36080	HDL36100	HDL36110	HDL36150	JDL36175	JDL36200	JDL36200	JDL36200
Generator Receptacle	GEN REC	ADR1044-RS	ADR1044-RS	ADR1044-RS	ADR1044-RS	ADR1044-RS	ADR1044-RS	ADR1044-RS	AR20044RS	AR20044RS	AR20044RS	AR20044RS	AR20044RS	AR20044RS
Generator Plug (Ship Loose)	GEN REC	ACP1044CD-RS	ACP1044CD-RS	ACP1044CD-RS	ACP1044CD-RS	ACP1044CD-RS	ACP1044CD-RS	ACP1044CD-RS	AP20044E-RS	AP20044E-RS	AP20044E-RS	AP20044E-RS	AP20044E-RS	AP20044E-RS
Main Power Distribution Block	PDB1	9080LBA363206	9080LBA363206	9080LBA363206	9080LBA363206	9080LBA363206	9080LBA363206	9080LBA363206	9080LBA363206	9080LBA365208	9080LBA365208	9080LBA365208	9080LBA365208	9080LBA365208
Main Power Distribution Block Cover	PDB1	9080LB33	9080LB33	9080LB33	9080LB33	9080LB33	9080LB33	9080LB33	9080LB33	9080LB53	9080LB53	9080LB53	9080LB53	9080LB53
VFD Circuit Breaker	CB4, CB5	HDL36015	HDL36015	HDL36015	HDL36020	HDL36030	HDL36030	HDL36050	HDL36050	HDL36070	HDL36080	HDL36100	HDL36100	HDL36125
VFD Semiconductor Fuse	F4-F6, F10-F12	A70P10-1	A70P10-1	A70P15-1	A70P20-1	A70P30-1	A70P30-1	A70P50-4	A70P50-4	A70P70-4	A70P80-4	A70P100-4	A70P100-4	A70P125-4
VFD Semiconductor Fuse Block	F4-F6, F10-F12	70316	70316	70316	70316	70316	70316	P243C	P243C	P243C	P243C	P243C	P243C	P266A
5% Line Reactor	LR1, LR2	RL-00202	RL-00404	RL-00804	RL-00803	RL-01203	RL-01803	RL-02503	RL-03503	RL-03503	RL-04503	RL-05503	RL-08003	RL-08003
480V VFD	VFD1, VFD2	CIMR-P7U40P7	CIMR-P7U41P5	CIMR-P7U42P2	CIMR-P7U43P7	CIMR-P7U45P5	CIMR-P7U47P5	CIMR-P7U49P0	CIMR-P7U4011	CIMR-P7U4015	CIMR-P7U4018	CIMR-P7U4024	CIMR-P7U4030	CIMR-P7U4037
Top Mount AC *Linear Layout Only*	HVAC1, HVAC2	IQ2000TXS-236	IQ2000TXS-236	IQ2000TXS-236	IQ2000TXS-236	IQ2000TXS-236	IQ2000TXS-236	IQ2000TXS-236	IQ2000TXS-236	IQ2000TXS-236	IQ2000TXS-236	IQ3000T-236	IQ4000T-236	IQ4000T-236
Side Mount AC *Back-to-Back Layout Only*	HVAC1, HVAC2	IQ2000VS-236	IQ2000VS-236	IQ2000VS-236	IQ2000VS-236	IQ2000VS-236	IQ2000VS-236	IQ2000VS-236	IQ2000VS-236	IQ2000VS-236	IQ2000VS-236	IQ3000VS-236	IQ4000VS-236	IQ4000VS-236
Meter Socket	-	UAP9701-RRL	UAP9701-RRL	UAP9701-RRL	UAP9701-RRL	UAP9701-RRL	UAP9701-RRL	UAP9701-RRL	UAP9701-RRL	UAP9701-RRL	UAP9701-RRL	UAP3566-X-HSP	UAP3566-X-HSP	UAP3566-X-HSP

Horsepower Related Power Conductors, CGB's and Hubs

Conductor Tag		Horsepower 1	2	3	5	7.5	10	15	20	25	30	40	50	60
P-01, P-03 & P-04	Description	(3)#8	(3)#8	(3)#8	(3)#8	(3)#4	(3)#4	(3)#3	(3)#2	(3)#1/0	(3)#2/0	(3)#3/0	(3)#4/0	(3)250kcmil
	Manufacturer	N/A	N/A	N/A	N/A	N/A	N/A	N/A	N/A	N/A	N/A	N/A	N/A	N/A
	Catalog #	N/A	N/A	N/A	N/A	N/A	N/A	N/A	N/A	N/A	N/A	N/A	N/A	N/A
	Length (Ft. Max)	N/A	N/A	N/A	N/A	N/A	N/A	N/A	N/A	N/A	N/A	N/A	N/A	N/A
	Cable Dia (in)	0.216"	0.216"	0.216"	0.216"	0.324"	0.324"	0.352"	0.384"	0.486"	0.532"	0.584"	0.642"	0.711"
	Appleton Connector	(3) -CG-1850	(3) -CG-1850	(3) -CG-1850	(3) -CG-1850	(3) -CG-3150	(3) -CG-3150	(3) -CG-3150	(3) -CG-3150	(3) -CG-3775	(3) -CG-5075	(3) -CG-5075	(3) -CG-6275	(3) -CG-6275
	Connector Range	0.187"-0.312"	0.187"-0.312"	0.187"-0.312"	0.187"-0.312"	0.312"-0.437"	0.312"-0.437"	0.312"-0.437"	0.312"-0.437"	0.375"-0.500"	0.500"-0.625"	0.500"-0.625"	0.625"-0.750"	0.625"-0.750"
	Meyers Hub	(3) 1/2" - STA-1	(3) 1/2" - STA-1	(3) 1/2" - STA-1	(3) 1/2" - STA-1	(3) 1/2" - STA-1	(3) 1/2" - STA-1	(3) 1/2" - STA-1	(3) 1/2" - STA-1	(3) 3/4" - STA-2	(3) 3/4" - STA-2	(3) 3/4" - STA-2	(3) 3/4" - STA-2	(3) 3/4" - STA-2
P-02A	Description	(1)#10	(1)#10	(1)#10	(1)#10	(1)#8	(1)#8	(1)#8	(1)#6	(1)#6	(1)#6	(1)#6	(1)#4	(1)#4
	Manufacturer	N/A	N/A	N/A	N/A	N/A	N/A	N/A	N/A	N/A	N/A	N/A	N/A	N/A
	Catalog #	N/A	N/A	N/A	N/A	N/A	N/A	N/A	N/A	N/A	N/A	N/A	N/A	N/A
	Length (Ft. Max)	N/A	N/A	N/A	N/A	N/A	N/A	N/A	N/A	N/A	N/A	N/A	N/A	N/A
	Cable Dia (in)	0.164"	0.164"	0.164"	0.164"	0.216"	0.216"	0.216"	0.254"	0.254"	0.254"	0.254"	0.324"	0.324"
	Appleton Connector	(1)-GC-1250	(1)-GC-1250	(1)-GC-1250	(1)-GC-1250	(1)-GC-1850	(1)-GC-1850	(1)-GC-1850	(1)-GC-1850	(1)-GC-1850	(1)-GC-1850	(1)-GC-1850	(1)-GC-3150	(1)-GC-3150
	Connector Range	0.125"-0.187"	0.125"-0.187"	0.125"-0.187"	0.125"-0.187"	0.187"-0.312"	0.187"-0.312"	0.187"-0.312"	0.187"-0.312"	0.187"-0.312"	0.187"-0.312"	0.187"-0.312"	0.312"-0.437"	0.312"-0.437"
	Hub	(1) 1/2" - STA-1	(1) 1/2" - STA-1	(1) 1/2" - STA-1	(1) 1/2" - STA-1	(1) 1/2" - STA-1	(1) 1/2" - STA-1	(1) 1/2" - STA-1	(1) 1/2" - STA-1	(1) 1/2" - STA-1	(1) 1/2" - STA-1	(1) 1/2" - STA-1	(1) 1/2" - STA-1	(1) 1/2" - STA-1
P-02B	Description	(1)#10	(1)#10	(1)#10	(1)#10	(1)#8	(1)#8	(1)#8	(1)#6	(1)#6	(1)#6	(1)#6	(1)#4	(1)#4
	Manufacturer	Southwire	Southwire	Southwire	Southwire	Southwire	Southwire	Southwire	Southwire	Southwire	Southwire	Southwire	Southwire	Southwire
	Description	(3)#8	(3)#8	(3)#8	(3)#8	(3)#4	(3)#4	(3)#3	(3)#2	(3)#1/0	(3)#2/0	(3)#3/0	(3)#3/0	(3)#3/0
P-05 & P-06	Manufacturer	Southwire	Southwire	Southwire	Southwire	Southwire	Southwire	Southwire	Southwire	Southwire	N/A	N/A	N/A	N/A
	Catalog #	N/A	N/A	N/A	N/A	N/A	N/A	N/A	N/A	N/A	N/A	N/A	N/A	N/A
	Length (Ft. Max)	N/A	N/A	N/A	N/A	N/A	N/A	N/A	N/A	N/A	N/A	N/A	N/A	N/A
	Cable Dia (in)	0.216"	0.216"	0.216"	0.216"	0.324"	0.324"	0.352"	0.384"	0.486"	0.532"	0.584"	0.584"	0.584"
	Appleton Connector	(3) -CG-1850	(3) -CG-1850	(3) -CG-1850	(3) -CG-1850	(3) -CG-3150	(3) -CG-3150	(3) -CG-3150	(3) -CG-3150	(3) -CG-3775	(3) -CG-5075	(3) -CG-5075	(3) -CG-5075	(3) -CG-5075
	Connector Range	0.187"-0.312"	0.187"-0.312"	0.187"-0.312"	0.187"-0.312"	0.312"-0.437"	0.312"-0.437"	0.312"-0.437"	0.312"-0.437"	0.375"-0.500"	0.500"-0.625"	0.500"-0.625"	0.500"-0.625"	0.500"-0.625"
	Hub	(3) 1/2" - STA-1	(3) 1/2" - STA-1	(3) 1/2" - STA-1	(3) 1/2" - STA-1	(3) 1/2" - STA-1	(3) 1/2" - STA-1	(3) 1/2" - STA-1	(3) 1/2" - STA-1	(3) 3/4" - STA-2	(3) 3/4" - STA-2	(3) 3/4" - STA-2	(3) 3/4" - STA-2	(3) 3/4" - STA-2
P-05A	Description	(1)#8	(1)#8	(1)#8	(1)#8	(1)#4	(1)#4	(1)#3	(1)#2	(1)#1/0	(1)#2/0	(1)#3/0	(1)#3/0	(1)#3/0
	Manufacturer	Southwire	Southwire	Southwire	Southwire	Southwire	Southwire	Southwire	Southwire	Southwire	Southwire	Southwire	Southwire	Southwire
P-07 & P-10	Description	(3)#14 W/G, TC	(3)#14 W/G, TC	(3)#14 W/G, TC	(3)#14 W/G, TC	(3)#12 W/G, TC	(3)#10 W/G, TC	(3)#8 W/G, TC	(3)#8 W/G, TC	(3)#8 W/G, TC	(3)#6 W/G, TC	(3)#2 W/G, TC	(3)#2 W/G, TC	(3)#2 W/G, TC
	Manufacturer	Houston Wire	Houston Wire	Houston Wire	Houston Wire	Houston Wire	Houston Wire	Houston Wire	Houston Wire	Houston Wire	Houston Wire	Houston Wire	Houston Wire	Houston Wire
	Catalog #	HW151 1403G	HW151 1403G	HW151 1403G	HW151 1403G	HW151 1203G	HW151 1003G	HW 154 00803	HW 154 00803	HW 154 00803	HW 154 00603	HW 154 00203	HW 154 00203	HW 154 00203
	Length (Ft. Max)	19 FT	19 FT	19 FT	19 FT	19 FT	19 FT	19 FT	19 FT	19 FT	19 FT	19 FT	19 FT	19 FT
	Cable Dia (in)	0.364"	0.364"	0.364"	0.364"	0.408"	0.447"	0.58"	0.58"	0.58"	0.69"	1.03"	1.03"	1.03"
	Appleton Connector	(2) -CG-3150	(2) -CG-3150	(2) -CG-3150	(2) -CG-3150	(2) -CG-3150	(2) -CG-3750	(2) - CG-5075	(2) - CG-5075	(2) - CG-5075	(2) - CG-6275	(2) - CG-100125	(2) - CG-100125	(2) - CG-100125
	Connector Range	0.312"-0.437"	0.312"-0.437"	0.312"-0.437"	0.312"-0.437"	0.312"-0.437"	0.375"-0.500"	0.500"-0.625"	0.500"-0.625"	0.500"-0.625"	0.625"-0.750"	1.000"-1.125"	1.000"-1.125"	1.000"-1.125"
	Hub	(2) 1/2" - STA-1	(2) 1/2" - STA-1	(2) 1/2" - STA-1	(2) 1/2" - STA-1	(2) 1/2" - STA-1	(2) 1/2" - STA-1	(2) 3/4" - STA-2	(2) 3/4" - STA-2	(2) 3/4" - STA-2	(2) 3/4" - STA-2	(2) 1-1/4" - STA-4	(2) 1-1/4" - STA-4	(2) 1-1/4" - STA-4
P-08 & P-11	Description	(3)#14	(3)#14	(3)#14	(3)#14	(3)#12	(3)#10	(3)#8	(3)#8	(3)#8	(3)#6	(3)#2	(3)#2	(3)#2
	Manufacturer	Southwire	Southwire	Southwire	Southwire	Southwire	Southwire	Southwire	Southwire	Southwire	Southwire	Southwire	Southwire	Southwire

REVISIONS	BY

IMPROVEMENTS TO WASTEWATER COLLECTION SYSTEM

LIFT STATION CONSTRUCTION DETAILS

ELECTRICAL STANDARDS

FINAL SUBMITTAL

ECUA EMERALD COAST UTILITIES AUTHORITY

APPROVED BY:

Drawn:
Designed:
Checked:
Date: MAY '13
Scale:
Project No:
Sheet No. 11
Of 18 Sheets

ALL WORK SHALL BE CONSTRUCTED IN ACCORDANCE WITH THE LATEST EDITION OF THE E.C.U.A. STANDARD SPECIFICATIONS

Power & Control Conductors, CGB's and Hubs

Cable Number	Description	Manufacturer	Catalog Numer	FT. Qty	Cable Diameter	Appleton Liquidtight Cable Connector	Connector Cable Range	Crouse-Hinds Myers Hub	From Panel/Enclosure	To Panel/Enclosure
P-13	(3)#8 AWG W/GND, Tray Cable	Houston Wire & Cable	HW 154 00803	6 FT	0.58"	(1) - CG-5075	0.500"-0.625"	(1) 3/4" - STA-2	Power Panel	480/240-120V Transformer
P-14	(3)#6 AWG W/GND, Tray Cable	Houston Wire & Cable	HW 154 00603	6 FT	0.69"	(1) - CG-6275	0.625"-0.750"	(1) 3/4" - STA-2	480/240-120V Transformer	Power Panel
P-15	3-1/C #12 AWG	N/A	N/A	AS REQ'D	N/A	N/A	N/A	N/A	Power Panel	Power Panel
P-16	3-1/C #12 AWG	N/A	N/A	AS REQ'D	N/A	N/A	N/A	N/A	Power Panel	Power Panel
C-01	(16) #14 AWG, Tray Cable	Houston Wire & Cable	HW 151 01416	24 FT	0.68"	(2) - CG-6275	0.625"-0.750"	(2) 3/4" - STA-2	Power Panel	Control Panel
C-02	(5) #14 AWG, Tray Cable	Houston Wire & Cable	HW 151 01405	19 FT	0.41"	(2) - CG-3750	0.375"-0.500"	(2) 1/2" - STA-1	Power Panel	Pump 1 Panel
C-03	(16) #14 AWG, Tray Cable	Houston Wire & Cable	HW 151 01416	22 FT	0.68"	(2) - CG-6275	0.625"-0.750"	(2) 3/4" - STA-2	Pump 1 Panel	Control Panel
C-04	(16) #14 AWG, Tray Cable	Houston Wire & Cable	HW 151 01416	19 FT	0.68"	(2) - CG-6275	0.625"-0.750"	(2) 3/4" - STA-2	Control Panel	Pump 2 Panel
C-05	1 Triad #16 SH, Tray Cable	Houston Wire & Cable	HW 121 1601T	22 FT	0.35"	(2) - CG-3150	0.312"-0.437"	(2) 1/2" - STA-1	Pump 1 Panel	Control Panel
C-06	1 Pair #16 SH, Tray Cable	Houston Wire & Cable	HW 120 01601	22 FT	0.33"	(2) - CG-2575	0.250"-0.375"	(2) 3/4" - STA-2	Pump 1 Panel	Control Panel
C-07	1 Triad #16 SH, Tray Cable	Houston Wire & Cable	HW 121 1601T	19 FT	0.35"	(2) - CG-3150	0.312"-0.437"	(2) 1/2" - STA-1	Pump 2 Panel	Control Panel
C-08	1 Pair #16 SH, Tray Cable	Houston Wire & Cable	HW 120 01601	19 FT	0.33"	(2) - CG-2575	0.250"-0.375"	(2) 3/4" - STA-2	Pump 2 Panel	Control Panel
C-09	(5) #14 AWG, Tray Cable	Houston Wire & Cable	HW 151 01405	22 FT	0.41"	(2) - CG-3750	0.375"-0.500"	(2) 1/2" - STA-1	Power Panel	Pump 2 Panel
PUMP 1-PWR	Per Mfg Specs	N/A	N/A	N/A	N/A	CG Series based on Mfg Specs	N/A	STA Series based on Mfg Specs	Field (Pump 1)	Pump 1 Panel
PUMP 1-MTP	Per Mfg Specs	N/A	N/A	N/A	N/A	CG Series based on Mfg Specs	N/A	STA Series based on Mfg Specs	Field (Pump 1)	Pump 1 Panel
PUMP 1-SF	Per Mfg Specs	N/A	N/A	N/A	N/A	CG Series based on Mfg Specs	N/A	STA Series based on Mfg Specs	Field (Pump 1)	Pump 1 Panel
PUMP 2-PWR	Per Mfg Specs	N/A	N/A	N/A	N/A	CG Series based on Mfg Specs	N/A	STA Series based on Mfg Specs	Field (Pump 2)	Pump 2 Panel
PUMP 2-MTP	Per Mfg Specs	N/A	N/A	N/A	N/A	CG Series based on Mfg Specs	N/A	STA Series based on Mfg Specs	Field (Pump 2)	Pump 2 Panel
PUMP 2-SF	Per Mfg Specs	N/A	N/A	N/A	N/A	CG Series based on Mfg Specs	N/A	STA Series based on Mfg Specs	Field (Pump 2)	Pump 2 Panel
Float Switch 1	Float Switch Cable	BY OTHERS	N/A	N/A	0.56"	(1) - CG-5050	0.500"-0.625"	(1) 1/2" - STA-1	Field (Float Switch)	Control Panel
Float Switch 2	Float Switch Cable	BY OTHERS	N/A	N/A	0.56"	(1) - CG-5050	0.500"-0.625"	(1) 1/2" - STA-1	Field (Float Switch)	Control Panel
Pressure Xducer	Pressure Transducer Cable	BY OTHERS	N/A	N/A	0.35"	(1) - G-3150	0.312"-0.437"	(1) 1/2" - STA-1	Field (Float Switch)	Control Panel
Antenna COAX	Coaxial Cable	BY OTHERS	N/A	N/A	0.408"	(1) - CG-3750	0.375"-0.500"	(1) 1/2" - STA-1	Field (Antenna)	Control Panel
CAT5-1	Ethernet	BELDEN	7922A	19 FT	0.301"	(2) - CG-1850	0.187"-0.312"	(2) 1/2" - STA-1	Pump 1 Panel	Control Panel
CAT5-2	Ethernet	BELDEN	7922A	22 FT	0.301"	(2) - CG-1850	0.187"-0.312"	(2) 1/2" - STA-1	Pump 2 Panel	Control Panel

REVISIONS	BY

IMPROVEMENTS TO WASTEWATER COLLECTION SYSTEM

LIFT STATION CONSTRUCTION DETAILS

ELECTRICAL STANDARDS

FINAL SUBMITTAL

EMERALD COAST UTILITIES AUTHORITY

APPROVED BY:

Drawn:
Designed:
Checked:
Date: MAY '13
Scale:
Project No:
Sheet No. 12
Of 18 Sheets

NOTES:

ALL WORK SHALL BE CONSTRUCTED IN ACCORDANCE WITH THE LATEST EDITION OF THE E.C.U.A. STANDARD SPECIFICATIONS

1) ALL SPARE WIRE WILL BE CLEARLY LABELED WITH THE CABLE NUMBER & A SPARE DESIGNATION ON INDIVIDUAL WIRES (S1, S2, ect...). THESE SPARES SHOULD BE ABLE TO REACH ALL TERMINAL BLOCKS IN THE PANEL.

2) SPARE CONDUCTORS SHOULD BE TRIMMED AND HEAT SHRINK SHOULD BE USED TO SECURE THE SPARE CONDUCTORS IN THE CABLE.

3) THE INNER CONNECTING CONDUCTORS BETWEEN THE PANELS ARE CODED AS FOLLOWS: THE FIRST GROUP OF CHARACTER IS THE WIRE NUMBER AND THE SECOND GROUP IS THE COLOR (I.E. 1(BK) SIGNIFIES THAT THE WIRE NUMBER IS 1 AND THE COLOR IS BLACK). WIRE COLOR CODE AS FOLLOWS: BK-BLACK, RD-RED, BU-BLUE, OR-ORANGE, YL-YELLOW, BN-BROWN. FOR COLORS THAT ARE DENOTED AS XX/YY, XX IS THE BASE COLOR AND YY IS THE SPIRAL STRIPE (I.E. RD/BK IS A RED WIRE WITH A BLACK SPIRAL STRIPE).

4) SEE SHEETS 11 & 12 FOR PANEL TO PANEL INNER CONNECTING CONDUCTOR AND CABLE DETAILS.

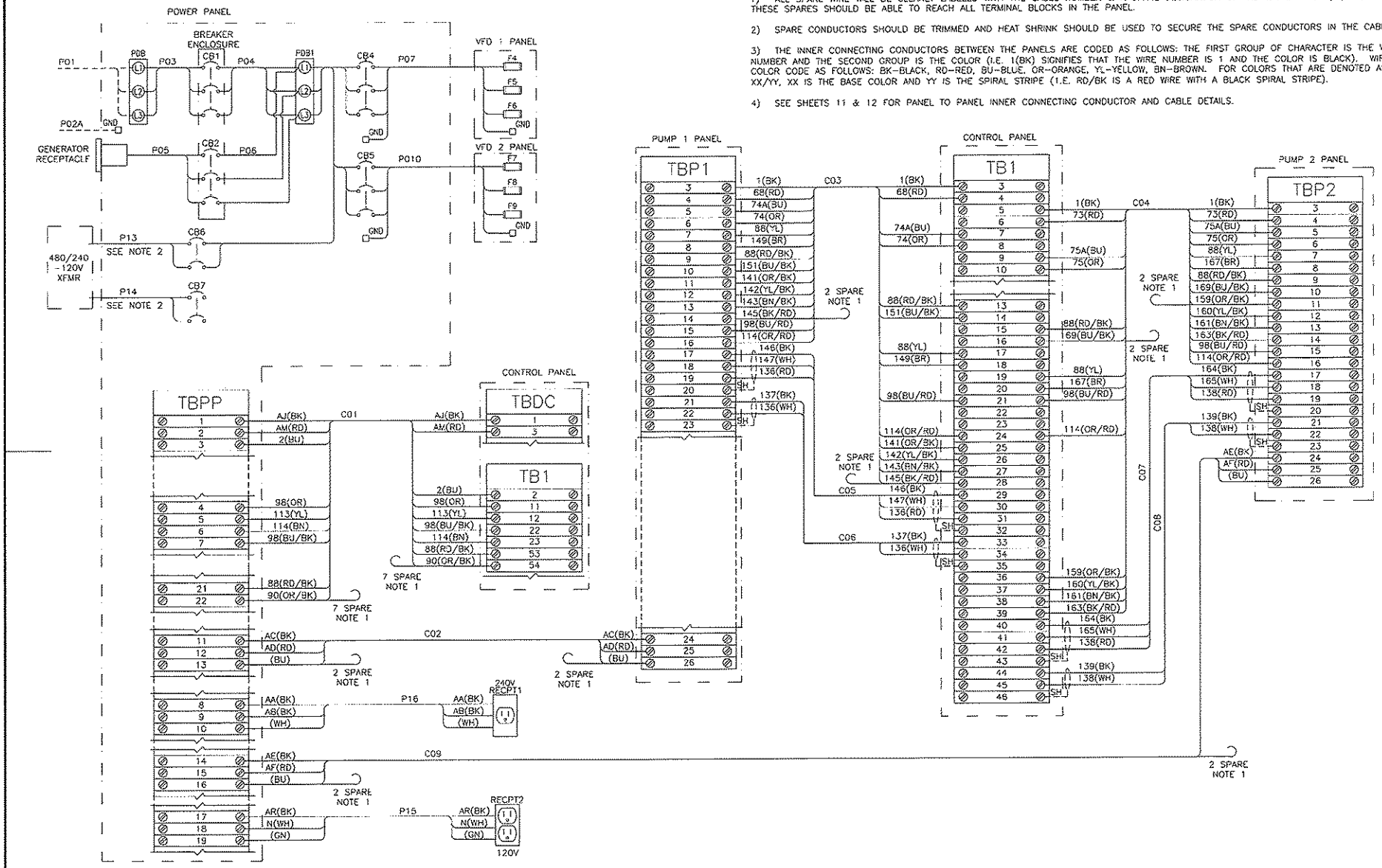

REVISIONS	BY

IMPROVEMENTS TO WASTEWATER COLLECTION SYSTEM

LIFT STATION CONSTRUCTION DETAILS

ELECTRICAL STANDARDS

FINAL SUBMITTAL

ECUA EMERALD COAST UTILITIES AUTHORITY

APPROVED BY:

Drawn:	
Designed:	
Checked:	
Date:	MAY '13
Scale:	
Project No:	
Sheet No.	13
	OF 18 Sheets

ALL WORK SHALL BE CONSTRUCTED IN ACCORDANCE WITH THE LATEST EDITION OF THE E.C.U.A. STANDARD SPECIFICATIONS

REVISIONS	BY

NOTES:

1. TOP AND BOTTOM OF BASE TO BE LEFT OPEN.
2. DRILL TOP OF BASE TO ATTACH ENCLOSURES AS REQUIRED.
3. DRILL BOTTOM OF BASE TO ATTACH TO SLAB AS REQUIRED.

ATTENTION

THIS LAYOUT IS ONE OF TWO (2) POSSIBLE CHOICES - SEE SHEET 14A FOR THE OTHER OPTION. IF THIS LAYOUT OPTION IS SELECTED, SEE SHEET 7 FOR ASSOCIATED PANEL LAYOUT DETAILS.

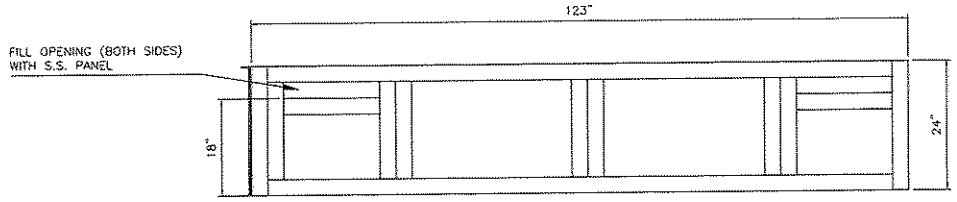

TOP VIEW

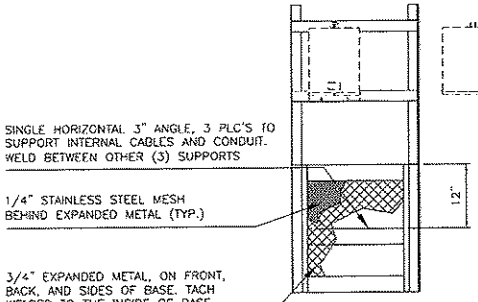

END VIEW

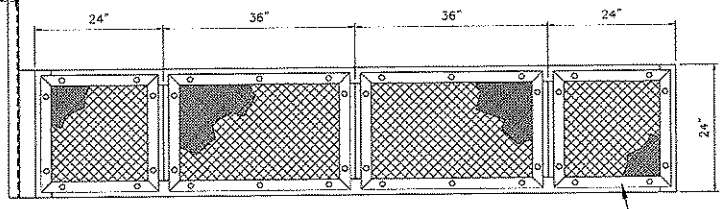

FRONT VIEW

FRONT OF BASE WILL HAVE REMOVABLE PANELS AT EACH OPENING AS SHOWN. ATTACH SCREENS TO BACK SIDE OF REMOVABLE PANELS

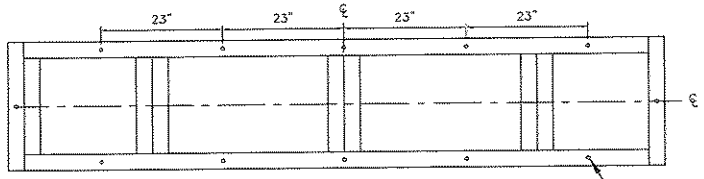

BOTTOM VIEW

DRILL (12) 5/8"ø HOLES AS SHOWN, CENTERED ON ANGLE

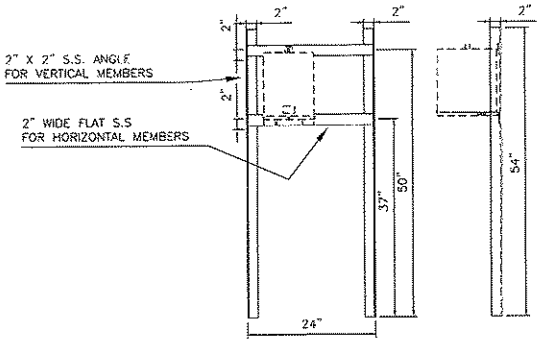

RACK DETAILS

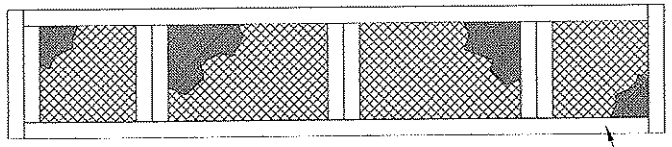

BACK VIEW

ENTIRE BASE MADE FROM 3" STAINLESS STEEL ANGLE, WELDED

IMPROVEMENTS TO WASTEWATER COLLECTION SYSTEM

LIFT STATION CONSTRUCTION DETAILS

ELECTRICAL STANDARDS

FINAL SUBMITTAL

EMERALD COAST UTILITIES AUTHORITY

APPROVED BY:

Drawn:	
Designed:	
Checked:	
Date:	MAY '13
Scale:	
Project No:	
Sheet No.	14
	OF 18 Sheets

ALL WORK SHALL BE CONSTRUCTED IN ACCORDANCE WITH THE LATEST EDITION OF THE E.C.U.A. STANDARD SPECIFICATIONS

REVISIONS	BY

IMPROVEMENTS TO WASTEWATER COLLECTION SYSTEM

LIFT STATION CONSTRUCTION DETAILS

ELECTRICAL STANDARDS

FINAL SUBMITTAL

Power Panel Fuse Schedule

Fuse	Type	Voltage	Amps	Description
F1	KTK-R-1	600	1A	Phase Monitor A Phase
F2	KTK-R-1	600	1A	Phase Monitor B Phase
F3	KTK-R-1	600	1A	Phase Monitor C Phase
F16	AGC-3	250	3A	Power Supply 1 Primary
F17	AGC-3	250	3A	Power Supply 2 Primary

Pump 1 Panel Fuse Schedule

Fuse	Type	Voltage	Amps	Description
F4	A70PXX-X	700	XXXA	Pump 1 Phase A
F5	A70PXX-X	700	XXXA	Pump 1 Phase B
F6	A70PXX-X	700	XXXA	Pump 1 Phase C
F7	FNQ-R-1/4	600	1/4A	Pump 1 CPT Phase A
F8	FNQ-R-1/4	600	1/4A	Pump 1 CPT Phase C
F9	FNQ-1/2	500	1/2A	Pump 1 CPT Secondary

(S SHEET 11 FOR FUSE TYPE AND AMPS)

Pump 2 Panel Fuse Schedule

Fuse	Type	Voltage	Amps	Description
F10	A70PXX-X	700	XXXA	Pump 2 Phase A
F11	A70PXX-X	700	XXXA	Pump 2 Phase B
F12	A70PXX-X	700	XXXA	Pump 2 Phase C
F13	FNQ-R-1/4	600	1/4A	Pump 2 CPT Phase A
F14	FNQ-R-1/4	600	1/4A	Pump 2 CPT Phase C
F15	FNQ-1/2	500	1/2A	Pump 2 CPT Secondary

(S SHEET 11 FOR FUSE TYPE AND AMPS)

Control Panel Fuse Schedule

Fuse	Type	Voltage	Amps	Description
F18	AGC-10	250	10A	Power Supply 1 Secondary
F19	AGC-10	250	10A	Power Supply 2 Secondary
F20	AGC-10	250	10A	Control Power
F21	AGC-10	250	10A	Batteries
F22	AGC-2	250	2A	Radio Power Supply Primary
F23	AGC-2	250	2A	Radio Power Supply Secondary
F24	AGC-1/4	250	1/4A	Pump 1 Motor Thermal
F25	AGC-1/4	250	1/4A	Pump 2 Motor Thermal
F26	AGC-1/10	250	1/10A	Operator Interface
F27	AGC-1	250	1A	Digital Inputs 0.0-1.4
F28	AGC-1	250	1A	Digital Inputs 1.5-2.7
F29	AGC-2	250	2A	Digital Outputs 0.0-0.7
F30	AGC-2	250	2A	Digital Outputs 1.0-1.7
F31	AGC-1-1/2	250	1-1/2A	PLC Power
F32	AGC-3/4	250	3/4A	Process Transmitter Supply
F33	AGC-1/10	250	1/10A	Analog Inputs
F34	AGC-1/10	250	1/10A	Analog Outputs
F35	GMA-1/4	250	1/4A	Analog Input 2
F36	GMA-1/4	250	1/4A	Analog Input 3
F37	GMA-1/4	250	1/4A	Analog Input 4

HMI BUTTON LEGEND

F1	FAULT RESET/ENABLE INTRUSION
SHIFT+F1	DISABLE INTRUSION
F2	ALTERNATE PUMP ASSIGNMENTS
F3	RESET PUMP 1 RUNTIME
SHIFT+F3	RESET PUMP 2 RUNTIME
F4	ALARMS SCREEN
F5	OVERVIEW SCREEN
F6	PUMP 1 SCREEN
F7	PUMP 2 SCREEN
F8	SETPOINTS SCREEN

CONTROL PANEL ISO INFORMATION TAGS

THIS AREA IN ELEVATION IS FOR IN PANEL ISO SAFE CIRCUITS AND DEVICES ONLY. THIS AREA INCLUDES A 6 INCH BEZEL IN FRONT OF THE BLUE AREA BETWEEN THE BACKPANEL AND THE DOUBLE WALLS AND DOOR INCLUDING THE BOTTOM OF THE ENCLOSURE. ONLY INTRINSICALLY SAFE DEVICES AND WIRING ARE ALLOWED IN THIS AREA. DO NOT ROUTE NON-INTRINSICALLY SAFE WIRE THROUGH THE AREA OF ENCLOSURE.

WARNING

SUBSTITUTION OF COMPONENTS MAY IMPAIR INTRINSIC SAFETY

CONTROL PANEL EXTERIOR TAG INFORMATION

WARNING

TO PREVENT IGNITION OF FLAMMABLE OR COMBUSTIBLE ATMOSPHERES DISCONNECT POWER BEFORE SERVICING

PROVIDES INTRINSICALLY SAFE CIRCUITS DESIGNED FOR USE IN CLASS I, GROUPS A, B, C, AND D WHEN CONNECTED PER REFERENCE DRAWING ON MAIN NAMEPLATE TABLE

VFD 1 & 2 INCOMING "LINE" AC INFORMATION

WARNING

HAZARDS FEED FROM INCOMING

POWER PANEL GENERATOR NEUTRAL TAG INFORMATION

WARNING

480/277V SYSTEM NEUTRAL IS MARKED WITH GRAY TAPE

WARNING

240/120V SYSTEM NEUTRAL IS MARKED WITH WHITE TAPE

CONTROL PANEL DEAD-FRONT TAG INFORMATION

SECURELY CLOSE ALL INNER DOOR LATCHES BEFORE CLOSING OUTER DOOR. FAILURE TO FOLLOW THIS INSTRUCTION COULD CAUSE THE OUTER DOOR TO JAM WHEN RE-OPENED

Nameplate Data

Total Load (FLA)	27	31	35	40	52	62	74	88	102	118	136	170	192
Motor Hp	1	2	3	5	7.5	10	15	20	25	30	40	50	60
Motor FLA	2.1	3.4	4.8	7.6	11	14	21	27	34	40	52	65	77

Torque Rating Table

Component	Horsepower 1	2	3	5	7.5	10	15	20	25	30	40	50	60
Incoming Distribution Block (PDB1)	40lb-in/4.5N-m	40lb-in/4.5N-m	40lb-in/4.5N-m	40lb-in/4.5N-m	120lb-in/13.5N-m	120lb-in/13.5N-m	120lb-in/13.5N-m	120lb-in/13.5N-m	275lb-in/31.0N-m	275lb-in/31.0N-m	275lb-in/31.0N-m	275lb-in/31.0N-m	275lb-in/31.0N-m
Main Ground Block	20lb-in/2.2N-m	20lb-in/2.2N-m	20lb-in/2.2N-m	20lb-in/2.2N-m	25lb-in/2.8N-m	25lb-in/2.8N-m	25lb-in/2.8N-m	35lb-in/3.9N-m	35lb-in/3.9N-m	35lb-in/3.9N-m	35lb-in/3.9N-m	35lb-in/3.9N-m	35lb-in/3.9N-m
Motor Distribution Block (PDB2 & 3)	35lb-in/4.0N-m	35lb-in/4.0N-m	35lb-in/4.0N-m	35lb-in/4.0N-m	35lb-in/4.0N-m	35lb-in/4.0N-m	40lb-in/4.5N-m	40lb-in/4.5N-m	40lb-in/4.5N-m	120lb-in/13.5N-m	120lb-in/13.5N-m	120lb-in/13.5N-m	120lb-in/13.5N-m
Motor Ground Block	35lb-in/4.0N-m	35lb-in/4.0N-m	35lb-in/4.0N-m	35lb-in/4.0N-m	35lb-in/4.0N-m	35lb-in/4.0N-m	35lb-in/4.0N-m	35lb-in/4.0N-m	40lb-in/4.5N-m	45lb-in/5.1N-m	45lb-in/5.1N-m	45lb-in/5.1N-m	45lb-in/5.1N-m

ECUA EMERALD COAST UTILITIES AUTHORITY

APPROVED BY:

Drawn:	
Designed:	
Checked:	
Date:	MAY '13
Scale:	
Project No:	
Sheet No.	15
	OF 18 Sheets

ALL WORK SHALL BE CONSTRUCTED IN ACCORDANCE WITH THE LATEST EDITION OF THE E.C.U.A. STANDARD SPECIFICATIONS

REVISIONS	BY

HAZARDOUS (CLASSIFIED) LOCATION

CLASS I, ZONE 0 OR 1, GROUPS IIC, IIB, IIA or
CLASS I, DIVISION 1, GROUPS A,B,C,D
CLASS II, DIVISION 1, GROUPS E,F,G
CLASS III, DIVISION 1

NON-HAZARDOUS LOCATION

CLASS I, ZONE 2, GROUPS IIC, IIB, IIA or
CLASS I, DIVISION 2, GROUPS A,B,C,D

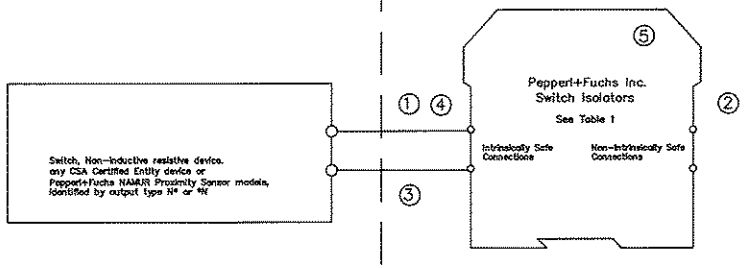

Notes:

① The intrinsically safe wiring must be installed in accordance with the Canadian Electrical Code CSA C22.1, Part 1, Appendix F.

② Barriers listed in Table 1 shall not be connected to any device that uses or generates in excess of 250Vrms or DC unless it has been determined that the voltage is adequately isolated from the barrier. Barriers listed in Table 2 shall not be connected to any device that uses or generates in excess of 60Vrms or DC unless the voltage is limited by an adequate means.

③ Any combination of up to 10 channels of the barriers listed in Table 1 or Table 2 may be connected in parallel and connected to a switch in a hazardous location.

④ The Entity concept allows interconnection of intrinsically safe apparatus with associated apparatus not specifically examined in combination as a system when the approved values of Voc and Isc for the associated apparatus are less than or equal to Vmax and Imax for the intrinsically safe apparatus and the approved values of Ca and La for the associated apparatus are greater than Ci + Ccable and Li + Lcable, respectively, for the intrinsically safe apparatus.

⑤ The following models with part number greater than 100000 are approved for mounting in a Class I, Zone 2, Groups IIC,IIB,IIA or Class I, Division 2, Groups A,B,C,D hazardous (classified) location: KF**-SR2-EX1.W, KF**-SR2-EX1.W.LB, KF**-SR2-EX2.W, KFD2-SR2-EX2.2S, KFD2-ST2-EX1.*, KFD2-ST2-EX2.*, KFD2-SOT2-EX1.*, KFD2-SOT2-EX2.*.

WARNING: Substitution of components may impair intrinsic safety and/or suitability for use in Class I, Division 2, Groups A,B,C,D or Class I, Zone 2, Groups IIC,IIB,IIA.
ADVERTISSEMENT: La substitution de composants peut compromettre la sécurité intrinsèque.

No changes without prior permission
CSA

THIS DRAWING CONTAINS PROPRIETARY DATA. NO DISCLOSURE, REPRODUCTION, OR USE OF ANY PART MAY BE MADE EXCEPT BY WRITTEN PERMISSION.

Title: Installation Drawing for CSA Certified Switch Isolators

Revisions				ECO No.
2-20-2008				
In. Date	Cons.	Resp.	Appr.	

Pepperl+Fuchs® Inc.
Twinsburg, OH 44087-2202

Repl. No. –

Draw. No. 116-0047j

Sh. 1 of 2

TABLE 1: Barriers Certified to CSA Standard C22.2 No. 157 (Um = 250 V)

Model Numbers	Terminals	SYSTEM V_{max}(V)	SYSTEM Res. (Ω)	ENTITY V_{oc} (V)	ENTITY I_{sc}(mA)	ENTITY C_a(uF) GRPS A,B	ENTITY C_a(uF) GRPS C,E	ENTITY C_a(uF) GRPS D,F,G	ENTITY L_a(mH) GRPS A,B	ENTITY L_a(mH) GRPS C,E	ENTITY L_a(mH) GRPS D,F,G
KFD2-SOT-Ex1*,KFD2-SOT-Ex2* KFD2-SR-Ex1*,KFD2-SR-Ex2* KFD2-SRT-Ex1* KFD2-ST-Ex1*,KFD2-ST-Ex2* KFA5-SR2-Ex1*,KFA5_SR2-Ex2* KFA6-SR2-Ex1*,KFA6-SR2-Ex2* KFD2-SR2-Ex1*,KFD2-SR2-Ex2*	1-3, 2-3; 4-6, 5-6	12.6	650	12.9	19.8	1.273	3.820	10.18	84.88	298.7	744.4
KFA5-SOT2-Ex1*,KFA5-SOT2-Ex2* KFA6-SOT2-Ex1*,KFA6-SOT2-Ex2*	1-3, 2-3; 4-6, 5-6	10.5	811	10.5	13.0	2.66	7.9	21.3	192	671	1000

TABLE 2: Barriers Certified to CSA Standard E79-11 (Um = 60 V)

Model Numbers	Terminals	Load Parameters U_o (V_{oc})	I_o (I_{sc})	C_a(uF) GRPS IIC (A,B)	C_a(uF) GRPS IIB (C,E)	C_a(uF) GRPS IIA (D,F,G)	L_a(mH) GRPS IIC (A,B)	L_a(mH) GRPS IIB (C,E)	L_a(mH) GRPS IIA (D,F,G)
KFD2-SOT2-Ex1*,KFD2-SOT2-Ex2* KFD2-ST2-Ex1*,KFD2-ST2-Ex2*	1-3, 2-3; 4-6, 5-6	10.5	13.0	2.66	7.9	21.3	192	671	1000

No changes without prior permission
CSA

THIS DRAWING CONTAINS PROPRIETARY DATA. NO DISCLOSURE, REPRODUCTION, OR USE OF ANY PART MAY BE MADE EXCEPT BY WRITTEN PERMISSION.

Title: Installation Drawing for CSA Certified Switch Isolators

Revisions				ECO No.
2-20-2008				
In. Date	Cons.	Resp.	Appr.	

Pepperl+Fuchs® Inc.
Twinsburg, OH 44087-2202

Repl. No. –

Draw. No. 116-0047j

Sh. 2 of 2

IMPROVEMENTS TO WASTEWATER COLLECTION SYSTEM

LIFT STATION CONSTRUCTION DETAILS

ELECTRICAL STANDARDS

FINAL SUBMITTAL

EMERALD COAST UTILITIES AUTHORITY

APPROVED BY:

Drawn:	
Designed:	
Checked:	
Date:	MAY '13
Scale:	
Project No:	
Sheet No.	16
	Of 18 Sheets

GENERAL ELECTRICAL NOTES

NEW WORK:

1. ENTIRE ELECTRICAL INSTALLATION SHALL BE IN ACCORDANCE WITH THE LATEST EDITION (UNLESS NOTED OTHERWISE) OF THE FOLLOWING CODES AND STANDARDS:
   1.1. NATIONAL ELECTRICAL CODE (NFPA 70).
   1.2. STANDARD FOR FIRE PROTECTION IN WASTEWATER TREATMENT AND COLLECTION FACILITIES (NFPA 820).
2. THE CONTRACTOR SHALL BE RESPONSIBLE FOR READING ALL PROJECT SPECIFICATIONS AND WILL BE RESPONSIBLE FOR MEETING ALL REQUIREMENTS OUTLINED IN THE SPECIFICATIONS.
3. CONTRACTOR SHALL COORDINATE ALL WORK WITH OTHER TRADES PRIOR TO ROUGH-IN AND INSTALLATION.
4. WORKING SPACE FOR ALL ELECTRICAL AND CONTROL EQUIPMENT OPERATING AT 600V VOLTS OR LESS TO GROUND AND LIKELY TO REQUIRE EXAMINATION, ADJUSTMENT, SERVICING, OR MAINTENANCE WHILE ENERGIZED SHALL COMPLY WITH NEC, ARTICLE 110.26.
5. THE ELECTRICAL DESIGN PROVIDES A NUMBER OF BRANCH CIRCUITS, AMPACITY AND OVERCURRENT PROTECTION FOR OTHER DIVISIONS DESIGN BASIS EQUIPMENT CONFORMING TO MANUFACTURER'S SPECIFICATIONS AVAILABLE AT TIME OF DESIGN. THE CONTRACTOR SHALL VERIFY ALL EQUIPMENT LOADS PRIOR TO ROUGH-IN. IF REQUIREMENTS OF EQUIPMENT ACTUALLY PROVIDED UNDER CONTRACT FOR CONSTRUCTION ARE DIFFERENT, CONTRACTOR SHALL MAKE ALL CHANGES NECESSARY WITHOUT INCREASE IN THE CONTRACT AMOUNT. SUCH CHANGES SHALL BE BASED UPON REQUIREMENTS, NAMEPLATE VALUES AND CODE REQUIREMENTS, WHICHEVER IS MORE STRINGENT, AND MAY INCLUDE, BUT ARE NOT LIMITED TO: SIZE OF CONDUCTORS, SIZE OF CONDUIT, QUANTITY OF CONDUCTORS AND CONDUITS, TYPE AND SIZE OF CIRCUIT BREAKER OR DISCONNECT, OVERLOADS, FULL-VOLTAGE STARTERS, REDUCED VOLTAGE SOFT STARTERS, VARIABLE FREQUENCY DRIVES, AND FUSE PROTECTION.
6. THE ELECTRICAL CONTRACTOR IS REQUIRED TO COORDINATE, PROVIDE, AND INSTALL A FULLY OPERATIONAL AND CODE COMPLIANT ELECTRICAL SYSTEM. THIS MAY INCLUDE THE ADDITION OF ELECTRICAL ITEMS NOT SHOWN ON THE ELECTRICAL PLANS, BUT REQUIRED FOR SYSTEM OPERATION.
7. CONTRACTOR SHALL COORDINATE INSTALLATION OF ELECTRICAL SERVICE WITH ELECTRICAL UTILITY COMPANY PROVIDING ELECTRICAL SERVICE TO FACILITY. CONTRACTOR SHALL PAY ALL FEES ASSESSED BY ELECTRICAL UTILITY COMPANY TO PROVIDE ELECTRICAL SERVICE TO FACILITY.
8. CONTRACTOR SHALL EXCAVATE AND CONDUCT DEMOLITION SO AS TO AVOID DAMAGE TO EXISTING UTILITIES AND OTHER UNDERGROUND OR CONCEALED ITEMS. IF EXISTING OR NEW ITEMS ARE DAMAGED, THE CONTRACTOR SHALL NOTIFY THE OWNER AT ONCE OF ALL DAMAGE AND SHALL REPAIR (OR REPLACE IF NECESSARY) TO THE ORIGINAL CONDITION TO THE SATISFACTION OF OWNER AND ENGINEER AT NO CHARGE IN THE CONTRACT AMOUNT.
9. THE CONTRACTOR SHALL BE RESPONSIBLE FOR PROVIDING DETAILED ELECTRICAL AND CONTROL EQUIPMENT LAYOUT DRAWINGS TO THE ENGINEER AND OWNER FOR APPROVAL PRIOR TO INSTALLATION.
10. ALL CONDUITS NOT LOCATED UNDER SLAB SHALL HAVE A MINIMUM BURIAL DEPTH OF 42", UNLESS NOTED OTHERWISE.
11. CONDUITS SHALL BE BURIED 42" (MINIMUM) BELOW GRADE WITH MARKER TAPE 6" ABOVE TOP OF CONDUIT, UNLESS NOTED OTHERWISE.
12. MINIMUM SIZE CONDUIT SHALL BE 1" (UNLESS NOTED OTHERWISE).
13. CONDUIT ROUTINGS AND DEVICE/EQUIPMENT LOCATIONS SHOWN ARE DIAGRAMMATIC ONLY. CONTRACTOR SHALL FIELD ROUTE AND LOCATE AS REQUIRED.
14. CONTRACTOR SHALL PROVIDE PULL BOXES IN POWER CIRCUIT CONDUIT AS REQUIRED TO LIMIT THE NUMBER OF BENDS TO A MAXIMUM OF 270° OR THREE 90° BENDS.
15. ALL WIRE SHALL BE COPPER.
16. ALL ELECTRICAL CIRCUITS SHALL INCLUDE A GREEN GROUNDING CONDUCTOR SIZED PER NEC.
17. CONDUCTORS SHALL BE TERMINATED ON TERMINAL BLOCKS.
18. THE CONTRACTOR SHALL TAG ALL POWER AND CONTROL SYSTEM CABLING AT ALL TERMINATION POINTS.
19. FINAL CONNECTION TO ALL EQUIPMENT IS SHOWN DIAGRAMMATIC. PROVIDE FINAL CONNECTION AS REQUIRED PER MANUFACTURER OF EQUIPMENT.
20. CONTRACTOR SHALL MAINTAIN A SET OF PRINTS AND MARK-UP DURING CONSTRUCTION TO REFLECT "AS-BUILT" CONDITIONS. PRINTS SHALL BE DELIVERED TO THE ENGINEER UPON COMPLETION OF THE PROJECT.
21. ALL HARDWARE SHALL BE STAINLESS STEEL.
22. ALUMINUM CONDUIT SHALL BE COATED WITH (2) WRAPS OF ANTI-CORROSION TAPE OR RUN THROUGH A SCHEDULE 80 PVC SLEEVE TO WHEN IN CONTACT WITH CONCRETE.
23. BARE COPPER SHALL BE COATED WITH (2) WRAPS OF ANTI-CORROSION TAPE OR RUN THROUGH A SCHEDULE 80 PVC SLEEVE TO WHEN IN CONTACT WITH CONCRETE.
24. ENGINEER OF RECORD SHALL BE RESPONSIBLE FOR FINAL SIZING OF ALL EQUIPMENT.

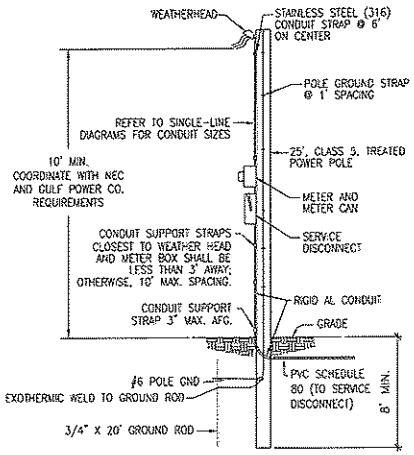

SERVICE LATERAL CONDUIT SHALL BE 3" (MIN) SCHEDULE 80 PVC BELOW GRADE AND 3" (MIN) RIGID AL CONDUIT ABOVE GRADE. ANY REQUIREMENTS BY THE UTILITY COMPANY SHALL PREVAIL OVER THE REQUIREMENTS OUTLINED HERE AND SHALL BE COORDINATED BY THE ELECTRICAL CONTRACTOR PRIOR TO INSTALLATION.

A3 UTILITY POLE DETAIL
NOT TO SCALE

ALL WORK SHALL BE CONSTRUCTED IN ACCORDANCE WITH THE LATEST EDITION OF THE E.C.U.A. STANDARD SPECIFICATIONS

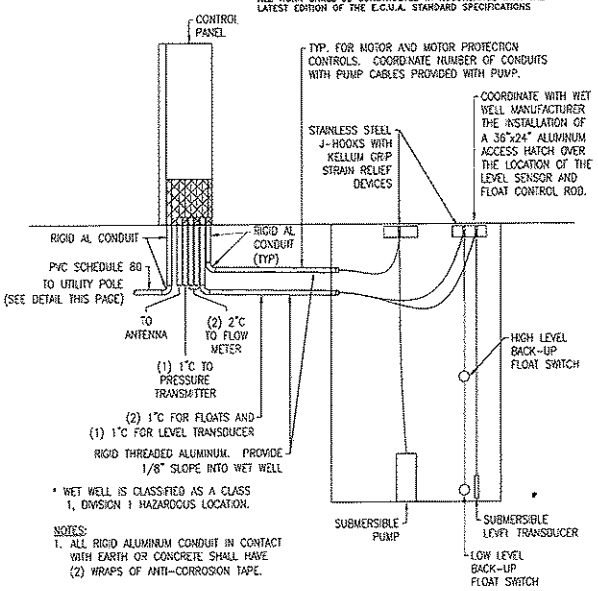

* WET WELL IS CLASSIFIED AS A CLASS 1, DIVISION 1 HAZARDOUS LOCATION.

NOTES:
1. ALL RIGID ALUMINUM CONDUIT IN CONTACT WITH EARTH OR CONCRETE SHALL HAVE (2) WRAPS OF ANTI-CORROSION TAPE.

B4 TYPICAL WET WELL SECTION DETAIL
NOT TO SCALE

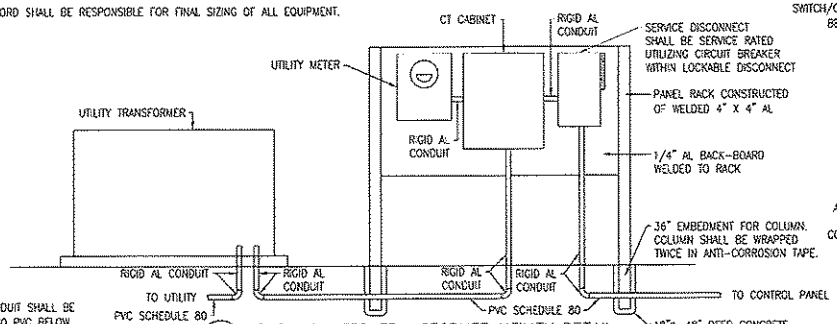

* SERVICE LATERAL CONDUIT SHALL BE 3" (MIN) SCHEDULE 80 PVC BELOW GRADE AND 3" (MIN) RIGID ALUMINUM CONDUIT ABOVE GRADE.

A1 PAD MOUNTED TRANSFORMER UTILITY DETAIL
NOT TO SCALE

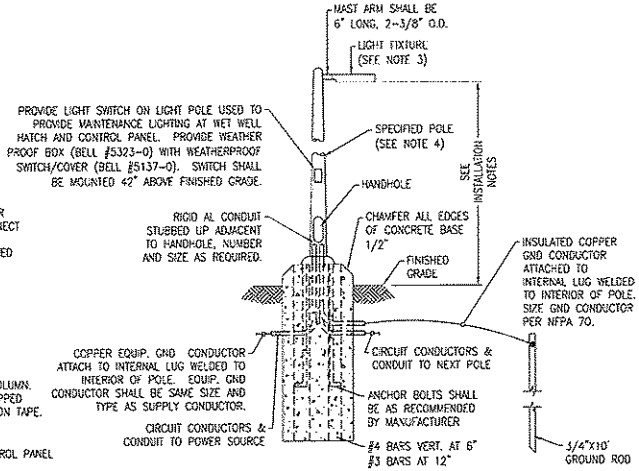

A4 LIGHT POLE INSTALLATION DETAIL
NOT TO SCALE

LIGHTING PERFORMANCE CRITERIA:
1. LIGHTING FIXTURE LAYOUT SHALL BE BASED UPON ACHIEVING 20 FOOT CANDLES (+/- 20%) AT THE FRONT OF THE CONTROL PANEL (WORK-PLANE OF 24" AFG) AND AT THE WET WELL ACCESS HATCH (WORKPLANE OF 0" AFG).
2. GENERAL SECURITY LIGHTING SHALL ENCOMPASS ACCESS GATE AND ALL PIPING/EQUIPMENT AT A MIN: AVERAGE 1 FOOT-CANDLE (+/- 20%, AT WORKPLANE OF 0" AFG).
3. REFER TO LIGHTING CONTROL DIAGRAM ON SHEET No. 18 FOR ADDITIONAL REQUIREMENTS.

LIGHT POLE INSTALLATION NOTES:
1. BURIAL AND DIAMETER DIMENSIONS INDICATED ARE FOR NOMINAL MINIMAL SIZES ONLY. FINAL DIMENSIONS SHALL BE DETERMINED BY A REGISTERED STRUCTURAL ENGINEER IN THE STATE OF FLORIDA, BASED UPON FIXTURES PROVIDED. PROVIDE SIGNED, DATED, AND SEALED PLANS FOR EACH INSTALLATION TYPE AND FIXTURE TYPE AS PART OF LIGHTING SUBMITTAL PACKAGE.
2. THE POLE AND FOUNDATION DESIGN SHALL BE BY A DELEGATED PROFESSIONAL ENGINEER TO MEET THE FOLLOWING CRITERIA:
   2.1. DESIGN WIND SPEED 160 MPH WITH A 1.3 GUST FACTOR. EXPOSURE CATEGORY C.
   2.2. SIZE EMBEDMENT FOR A MAXIMUM PERMANENT POLE DEFLECTION AFTER DESIGN WIND SPEED EVENT OF 1.00".
   2.3. ALUMINUM, ROUND OR SQUARE, TAPERED.
3. FIXTURE SHALL BE AMERICAN ELECTRIC LIGHTING ATB2 FIXTURE, 40 LED, 1000mA DRIVER, 120V, TYPE 4, WITH PHOTOCONTROL.
4. REFER TO SPECIFICATIONS SECTION 16521 "EXTERIOR LIGHTING" FOR ADDITIONAL REQUIREMENTS.
5. LIGHT FIXTURES SHALL BE MOUNTED AT 15'-0" (MAXIMUM) ABOVE FINISHED GRADE.

REVISIONS	BY

IMPROVEMENTS TO WASTEWATER COLLECTION SYSTEM
LIFT STATION CONSTRUCTION DETAILS
ELECTRICAL STANDARDS
FINAL SUBMITTAL

EMERALD COAST UTILITIES AUTHORITY

APPROVED BY:

Drawn:
Designed:
Checked:
Date: MAY '13
Scale:
Project No:
Sheet No. 17
OF 18 Sheets

ALL WORK SHALL BE CONSTRUCTED IN ACCORDANCE WITH THE LATEST EDITION OF THE E.C.U.A. STANDARD SPECIFICATIONS

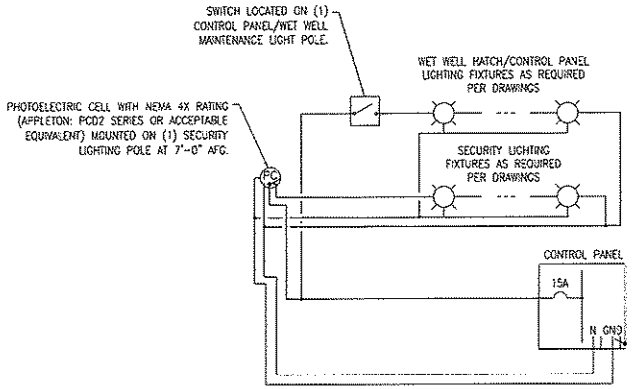

C2 TYPICAL LIGHTING CONTROL DIAGRAM
NOT TO SCALE

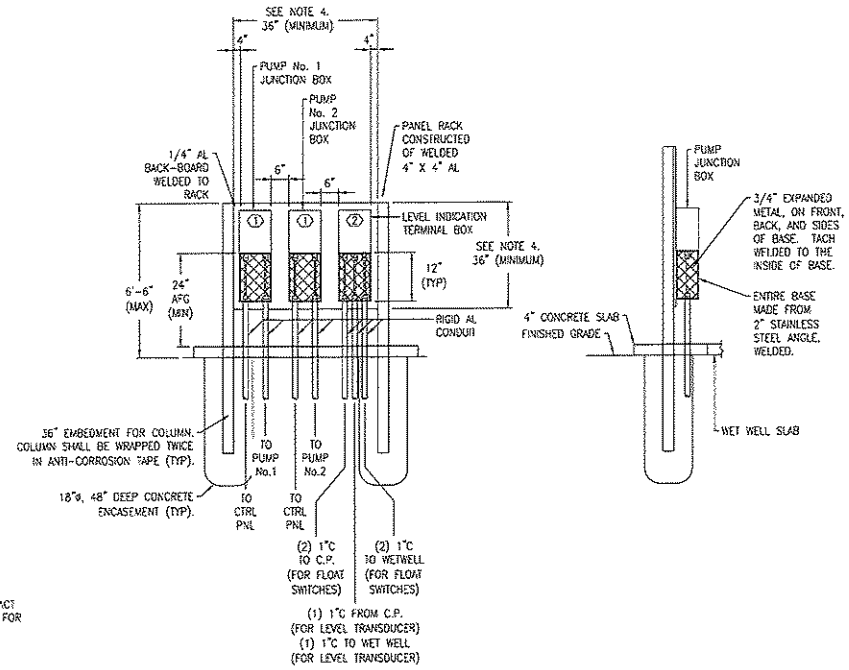

FRONT ELEVATION

SIDE ELEVATION

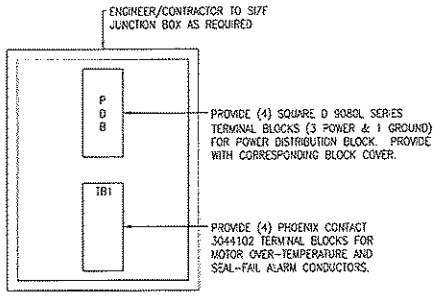

INTERIOR ELEVATION

DETAIL NOTES:

1. ALL TERMINAL BLOCKS SHALL BE PROVIDED WITH CORRESPONDING END BRACKETS AND END COVERS.
2. PROVIDE SEPARATE GROUND LUG IN EACH JUNCTION BOX, BONDED TO JUNCTION BOX.

A1 TYPICAL PUMP JUNCTION BOX ELEVATION
NOT TO SCALE

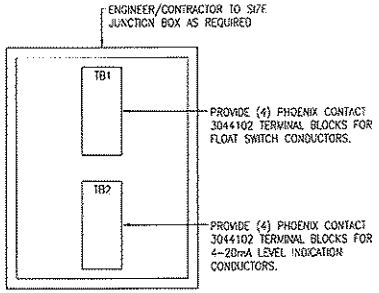

INTERIOR ELEVATION

DETAIL NOTES:

1. ALL TERMINAL BLOCKS SHALL BE PROVIDED WITH CORRESPONDING END BRACKETS AND END COVERS.
2. PROVIDE SEPARATE GROUND LUG IN EACH JUNCTION BOX, BONDED TO JUNCTION BOX.

A3 TYPICAL LEVEL INDICATION JUNCTION BOX ELEVATION
NOT TO SCALE

DETAIL NOTES:

1. THIS DETAIL SHALL ONLY APPLY WHEN THE CONTROL PANEL CANNOT BE PLACED WITHIN 6'-0" OF THE WET WELL TO ALLOW FOR CONNECTION OF STANDARD 50 FOOT PUMP CABLE CONNECTIONS.
2. BACKBOARD SHALL BE PLACED AT THE EDGE OF THE WET WELL SLAB BETWEEN THE WET WELL AND CONTROL PANEL.
3. JUNCTION BOXES SHALL BE MOUNTED SUCH THAT THEY ARE FACING THE WET WELL.
4. ENGINEER/CONTRACTOR SHALL SIZE JUNCTION BOXES AND BACKBOARDS BASED UPON INSTALLATION REQUIREMENTS PROVIDED AT TIME OF DESIGN.

KEY NOTES

① REFER TO "TYPICAL PUMP JUNCTION BOX ELEVATION" (THIS SHEET) FOR ADDITIONAL REQUIREMENTS.

② REFER TO "TYPICAL LEVEL INDICATION JUNCTION BOX ELEVATION" (THIS SHEET) FOR ADDITIONAL REQUIREMENTS.

A4 TYPICAL PUMP JUNCTION BOXES
NOT TO SCALE

REVISIONS	BY

IMPROVEMENTS TO WASTEWATER COLLECTION SYSTEM

LIFT STATION CONSTRUCTION DETAILS

ELECTRICAL STANDARDS

FINAL SUBMITTAL

EMERALD COAST UTILITIES AUTHORITY

APPROVED BY:

Drawn:	
Designed:	
Checked:	
Date:	MAY '13
Scale:	
Project No:	
Sheet No.	18
	OF 18 Sheets

ALL WORK SHALL BE CONSTRUCTED IN ACCORDANCE WITH THE LATEST EDITION OF THE E.C.U.A. STANDARD SPECIFICATIONS

480V 3Ø 20HP – 60HP SOFT STARTER ELECTRICAL STANDARD – ALTERNATE

FOR

EMERALD COAST UTILITY AUTHORITY ESCAMBIA COUNTY, FL

SHEET NO.	SHEET DESCRIPTION
1	MAIN POWER DISTRIBUTION SCHEMATIC
2	CONTROL SCHEMATIC
3	DIGITAL INPUTS SCHEMATIC
4	DIGITAL OUTPUTS & ANALOG INPUTS SCHEMATIC
5	ANALOG OUTPUTS & STARTER CONTROL SCHEMATIC
6	TERMINAL BLOCK LAYOUT AND FIELD CONNECTIONS
7A	BACK-TO-BACK EXTERIOR PANEL LAYOUT & FIELD CONDUIT REQUIREMENTS
8	POWER & PUMP 1 INTERNAL PANEL LAYOUTS
9	PUMP 2 & CONTROL PANEL INTERNAL LAYOUTS
10	EQUIPMENT LIST
11	HORSEPOWER RELATED EQUIPMENT & POWER CONDUCTORS
12	PANEL TO PANEL CONDUCTORS & EQUIPMENT
13	PANEL TO PANEL WIRING
14A	BACK-TO-BACK STAINLESS STEEL FRAME LAYOUT
15	TABLES, LEGENDS & TAGS
16	ISR INSTRUCTIONS
17	GENERAL NOTES AND DETAILS
18	GENERAL NOTES AND DETAILS

REVISIONS	BY

IMPROVEMENTS TO WASTEWATER COLLECTION SYSTEM

LIFT STATION CONSTRUCTION DETAILS

ELECTRICAL STANDARDS

FINAL SUBMITTAL

ECUA

EMERALD COAST UTILITIES AUTHORITY

APPROVED BY:

Drawn:

Designed:

Checked:

Date: MAY '13

Scale:

Project No:

Sheet No. 0

Of 18 Sheets

VOLTS	PHASE	FREQ	FLA
480	3	60	XXX
LARGEST MOTOR			
VOLTS	PHASE	FREQ	FLA	HP
480	3	60	XXX	XX
SHORT CIRCUIT CURRENT: 10kA RMS SYMMETRICAL, 480VAC MAXIMUM			

*FOR NAMEPLATE DATA FOR EACH HORSEPOWER RATING SEE SHEET 15 'NAMEPLATE DATA' TABLE

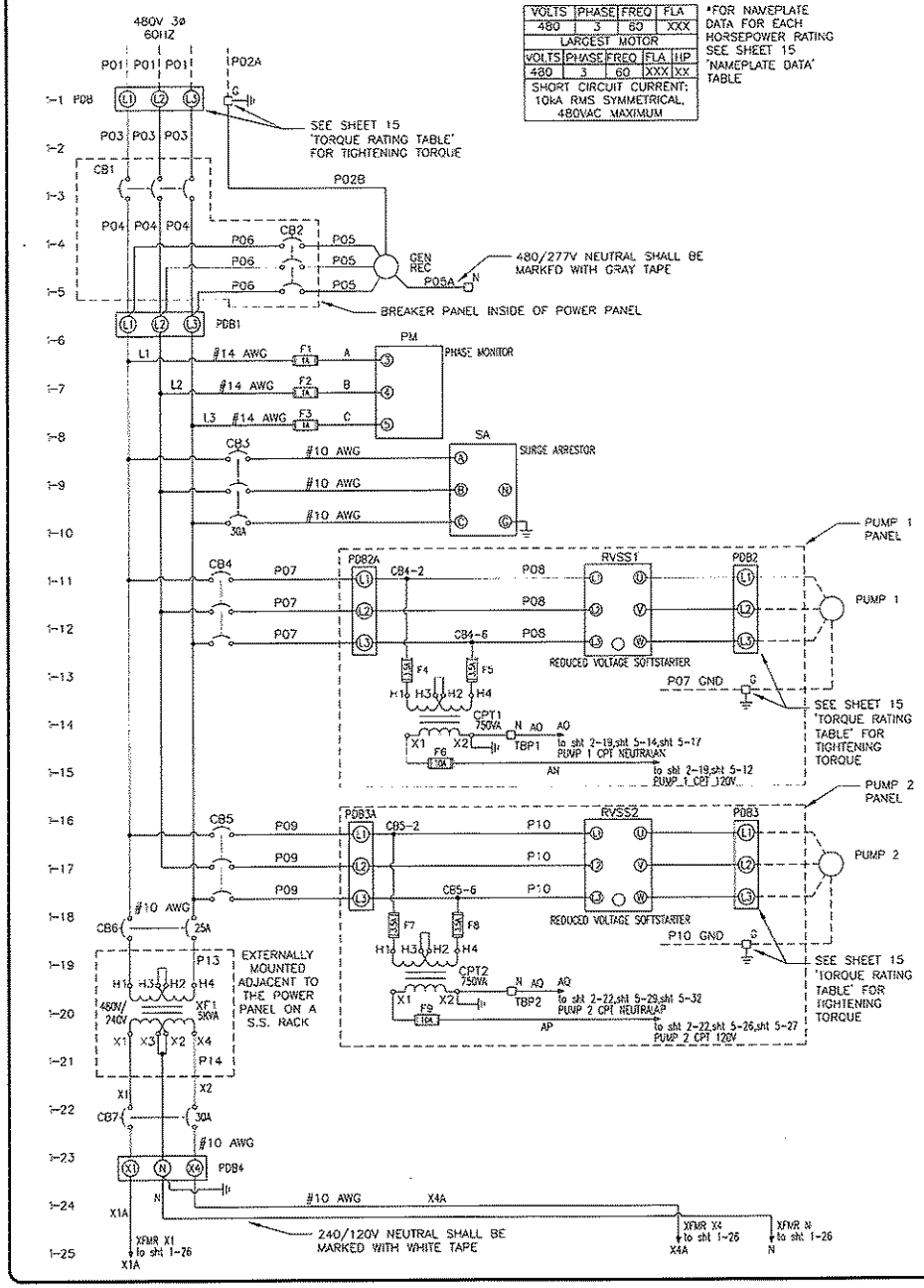

ALL WORK SHALL BE CONSTRUCTED IN ACCORDANCE WITH THE LATEST EDITION OF THE E.C.U.A. STANDARD SPECIFICATIONS

NOTES:

1. THE COMPLETED CONTROL PANEL SHALL BE LABELED AND MANUFACTURED TO MEET U.L. 508A AND 698A CERTIFICATION.
2. CONTROL PANEL WIRING SHALL BE STRANDED COPPER, MINIMUM SIZE #16 AWG WITH 600V 90DEGREE C TYPE THHN INSULATION.
3. CONTROL PANEL WIRING SHALL BE NUMBERED AT BOTH ENDS WITH TYPE WRITTEN, HEAT SHRINKABLE WIRE MARKERS.
4. ALL WIRING WITHIN THE CONTROL PANEL SHALL BE COLOR CODED OR CODED USING ELECTRICAL TAPE IN SIZES WHERE COLORED INSULATION IS NOT AVAILABLE. THE FOLLOWING CODING SHALL BE USED:
   - 4.1. UNGROUNDED AC CONDUCTORS AT SUPPLY VOLTAGE - BLACK
   - 4.2. GROUNDED AC CURRENT CARRYING CONDUCTORS - WHITE
   - 4.3. UNGROUNDED AC CONDUCTORS BELOW SUPPLY VOLTAGE - RED
   - 4.4. UNGROUNDED AC CONTROL CONDUCTORS & CONDUCTORS THAT REMAIN ENERGIZED WHEN THE MAIN DISCONNECT IS OFF - YELLOW
   - 4.5. UNGROUNDED DC CONTROL CONDUCTORS - ORANGE
   - 4.6. GROUNDED DC CURRENT CARRYING CONDUCTORS - BROWN
   - 4.7. INTRINSICALLY SAFE WIRING - BLUE
   - 4.8. GROUND CONDUCTORS - GREEN
5. SEE SHEETS 11 & 12 FOR DETAILS REGARDING ALL POWER CONDUCTORS LABELED PXX.
6. SEE SHEET 11 'HORSEPOWER RELATED COMPONENTS EQUIPMENT LIST' FOR RATINGS OF OVERCURRENT PROTECTION DEVICES.
7. SEE SHEET 6 FOR TERMINAL BLOCK DESIGNATIONS AND DESCRIPTIONS.

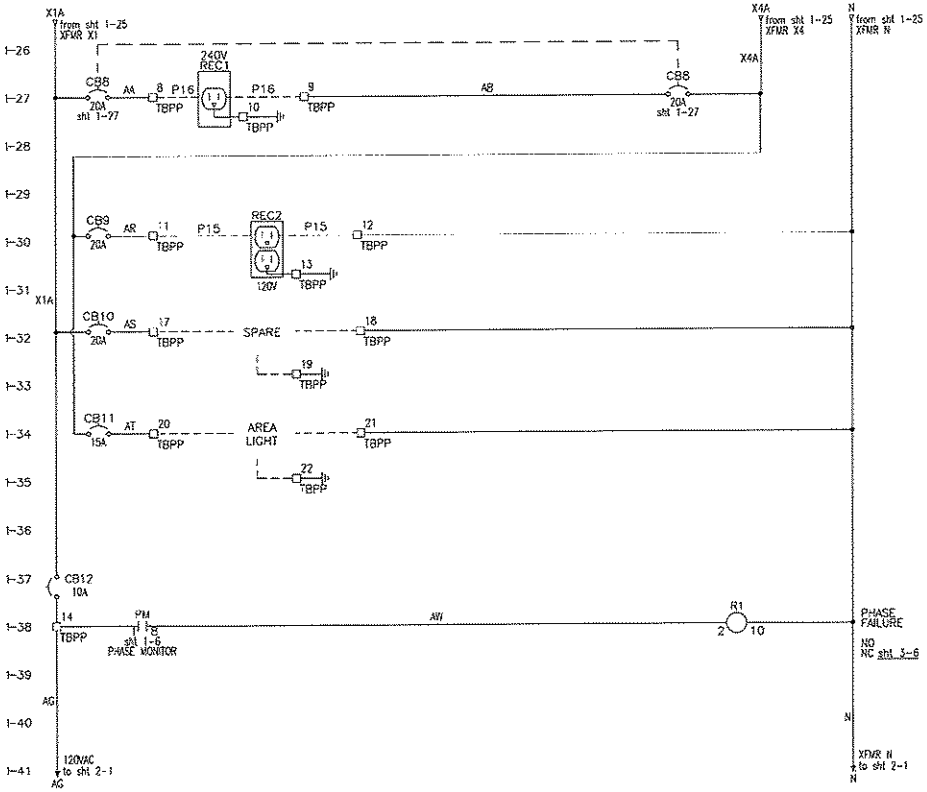

REVISIONS	BY

IMPROVEMENTS TO WASTEWATER COLLECTION SYSTEM

LIFT STATION CONSTRUCTION DETAILS

ELECTRICAL STANDARDS

FINAL SUBMITTAL

EMERALD COAST UTILITIES AUTHORITY

APPROVED BY:

Drawn:
Designed:
Checked:
Date: MAY '13
Scale:
Project No:
Sheet No. 1
OF 18 Sheets

ALL WORK SHALL BE CONSTRUCTED IN ACCORDANCE WITH THE LATEST EDITION OF THE E.C.U.A. STANDARD SPECIFICATIONS

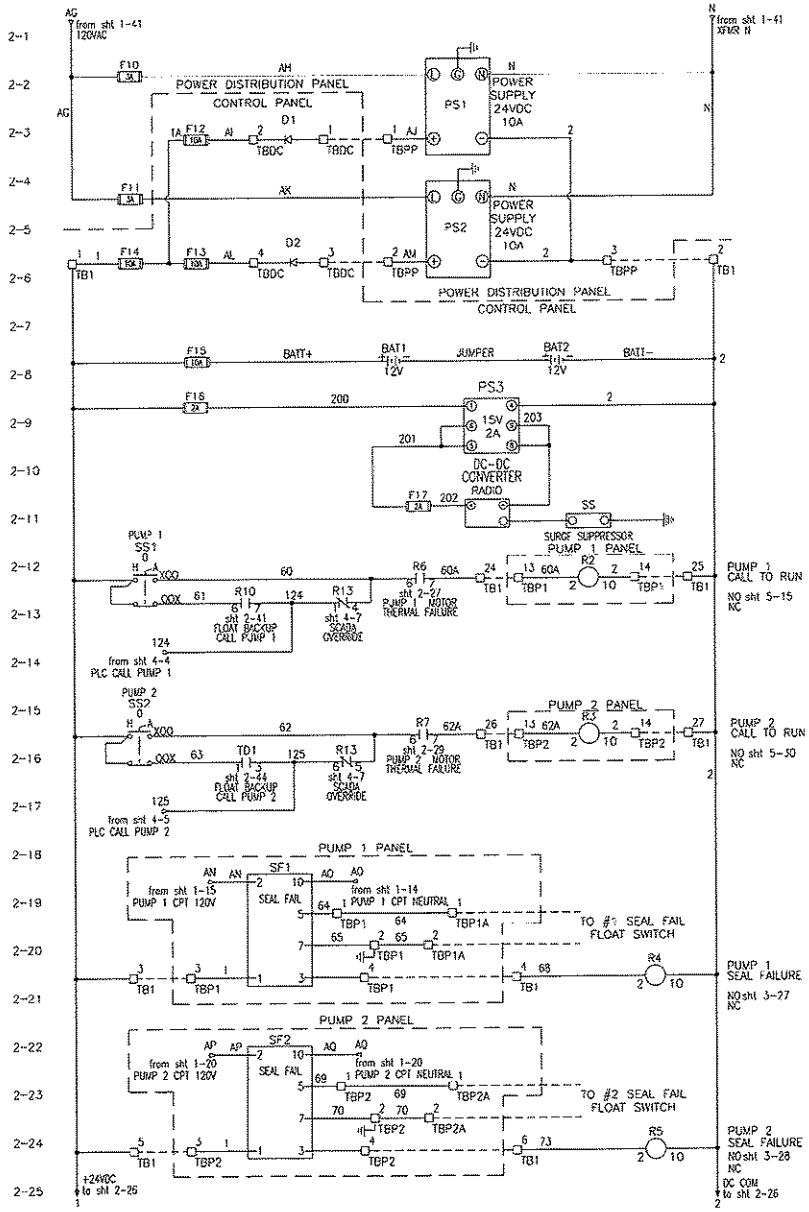

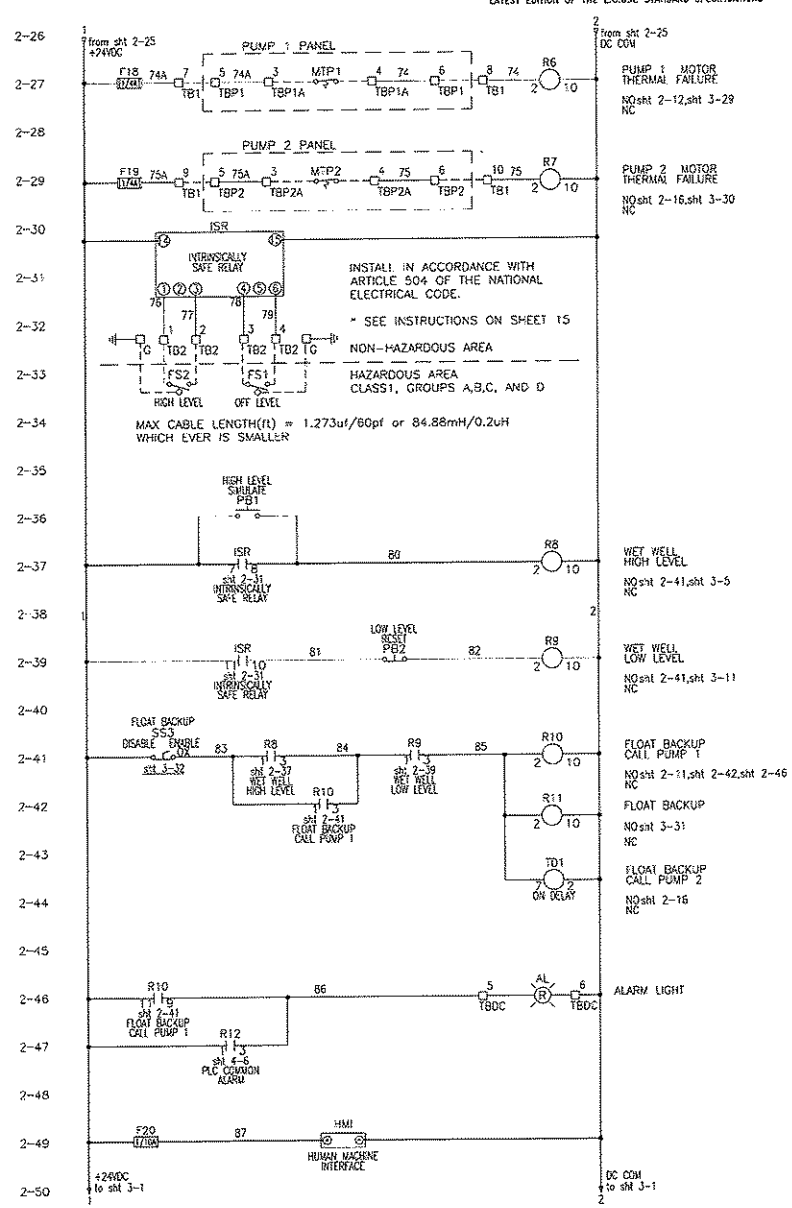

REVISIONS	BY

IMPROVEMENTS TO WASTEWATER COLLECTION SYSTEM

LIFT STATION CONSTRUCTION DETAILS

ELECTRICAL STANDARDS

FINAL SUBMITTAL

EMERALD COAST UTILITIES AUTHORITY

APPROVED BY:

Drawn:	
Designed:	
Checked:	
Date:	MAY '13
Scale:	
Project No:	
Sheet No.	2
	Of 18 Sheets

ALL WORK SHALL BE CONSTRUCTED IN ACCORDANCE WITH THE LATEST EDITION OF THE E.C.U.A. STANDARD SPECIFICATIONS

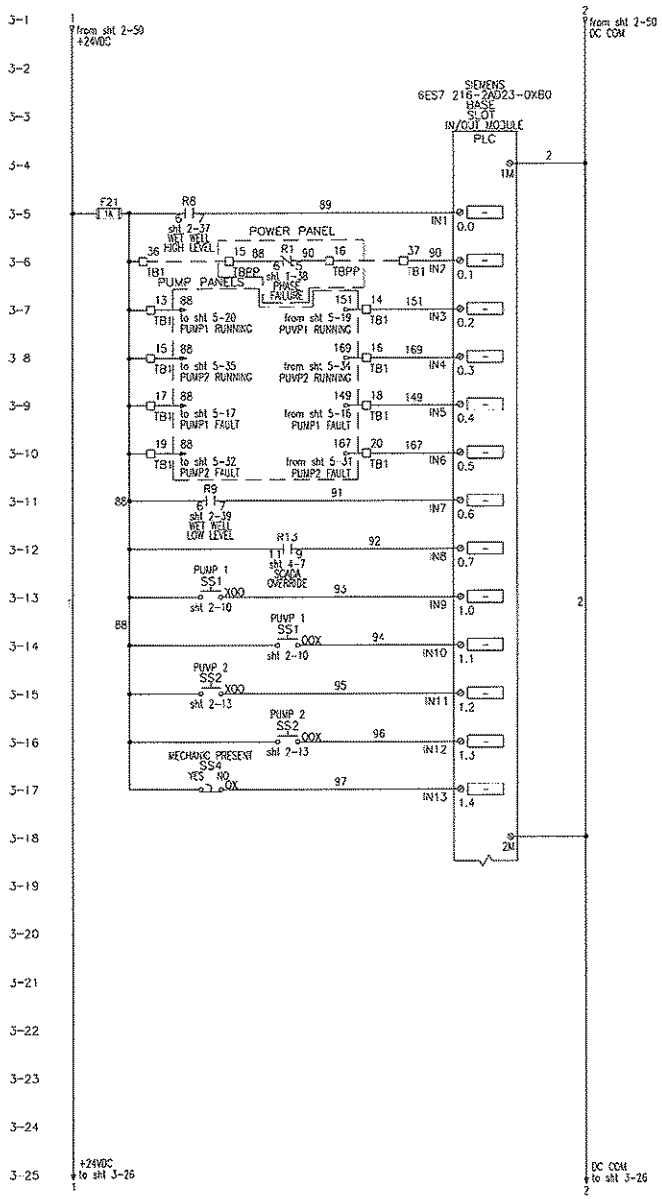

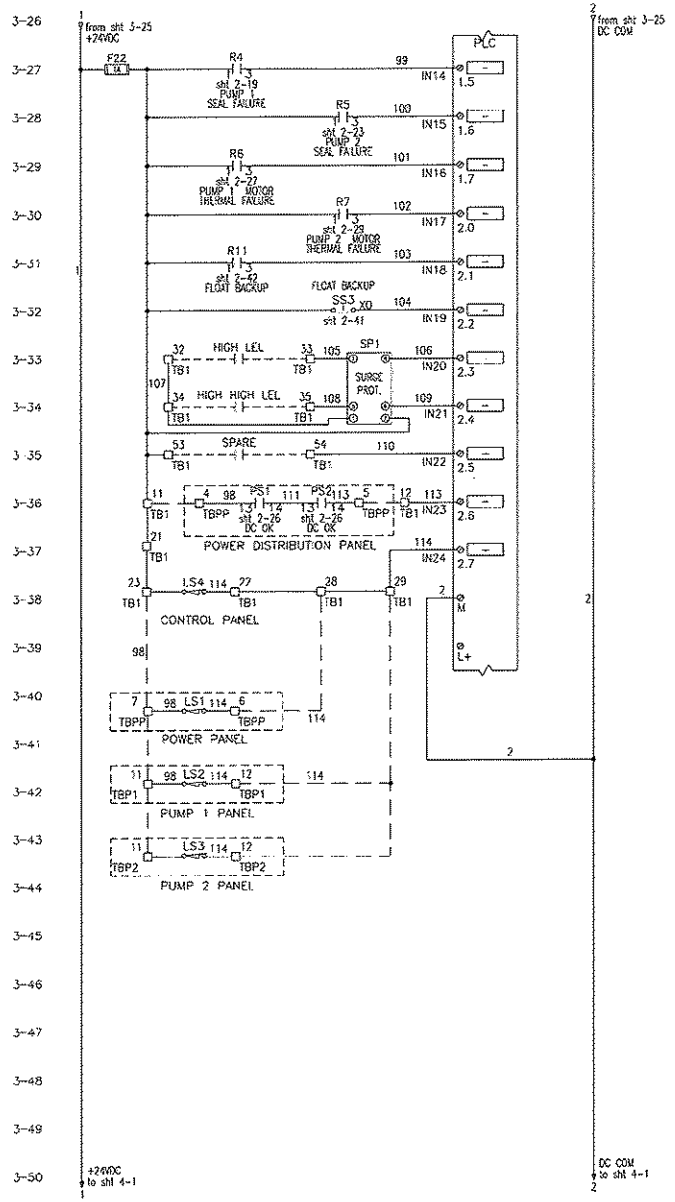

REVISIONS	BY

IMPROVEMENTS TO WASTEWATER COLLECTION SYSTEM

LIFT STATION CONSTRUCTION DETAILS

ELECTRICAL STANDARDS

FINAL SUBMITTAL

EMERALD COAST UTILITIES AUTHORITY

APPROVED BY:

Drawn:
Designed:
Checked:
Date: MAY '13
Scale:
Project No:
Sheet No. 3
OF 18 Sheets

ALL WORK SHALL BE CONSTRUCTED IN ACCORDANCE WITH THE LATEST EDITION OF THE E.C.U.A. STANDARD SPECIFICATIONS

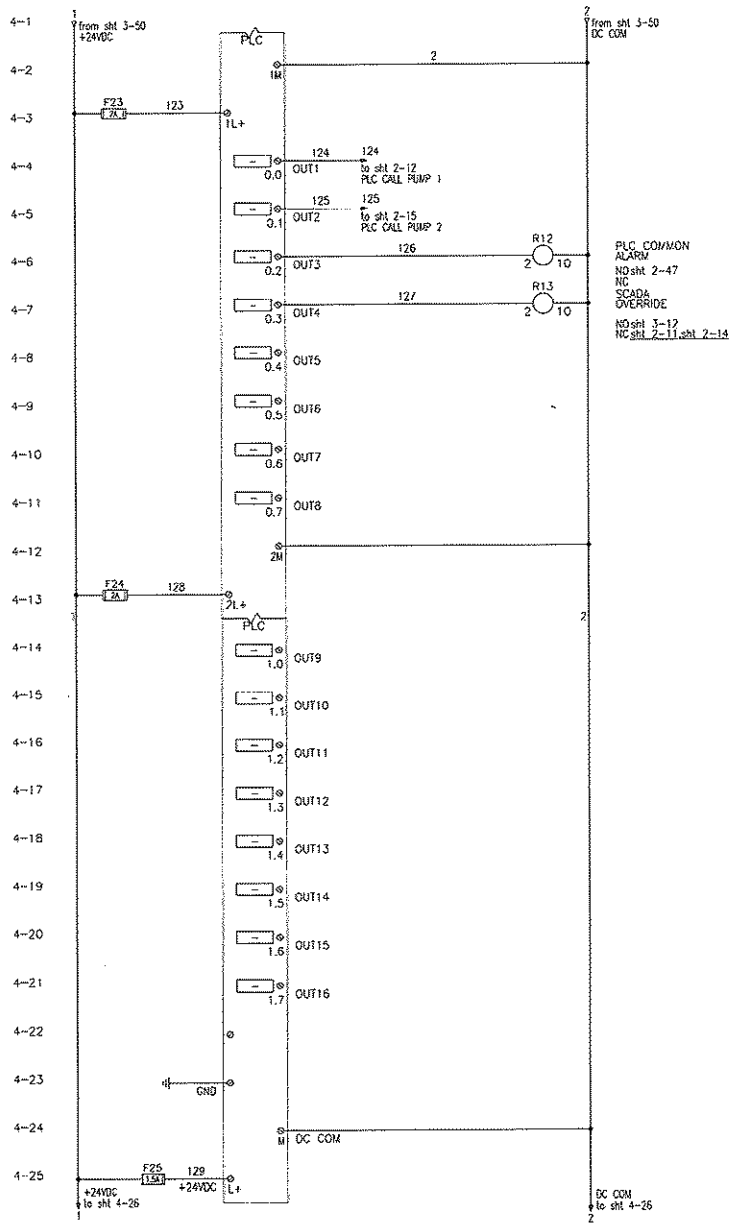

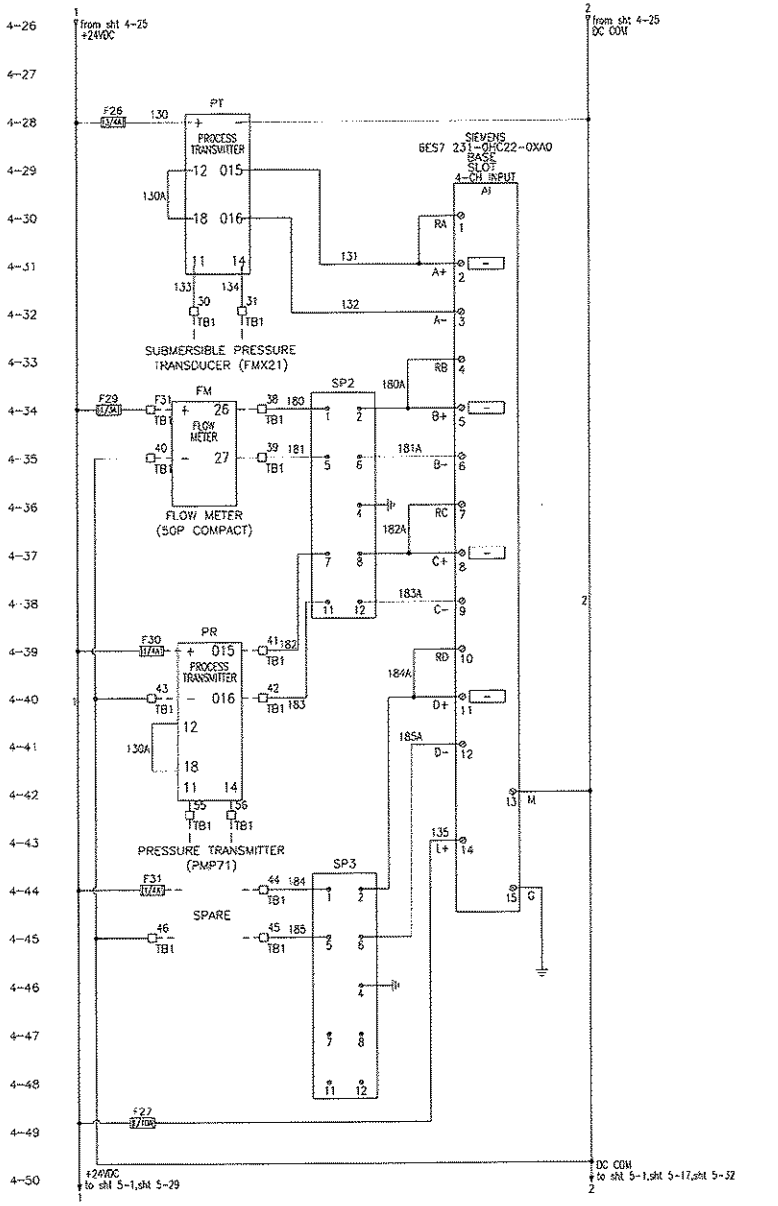

REVISIONS	BY

IMPROVEMENTS TO WASTEWATER COLLECTION SYSTEM

LIFT STATION CONSTRUCTION DETAILS

ELECTRICAL STANDARDS

FINAL SUBMITTAL

EMERALD COAST UTILITIES AUTHORITY

APPROVED BY:

Drawn:	
Designed:	
Checked:	
Date:	MAY '13
Scale:	
Project No:	
Sheet No.	4
	OF 18 Sheets

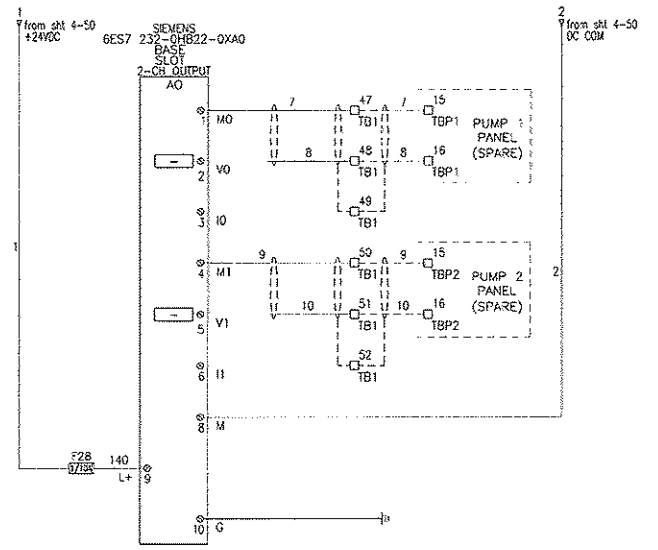

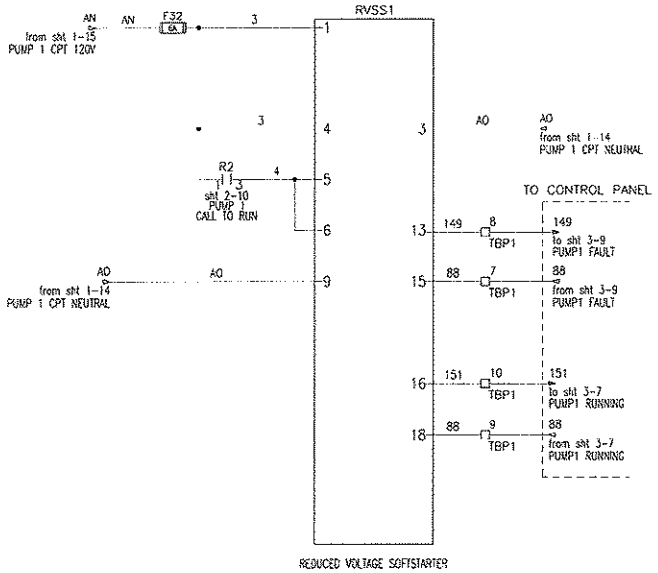

RVSS PARAMETERS
FAULT PARAMETERS –
FAULT RESET = YES

I/O PROGRAMMING PARAMETERS–
FAULT RELAY TYPE = FAILSAFE

ALL WORK SHALL BE CONSTRUCTED IN ACCORDANCE WITH THE LATEST EDITION OF THE E.C.U.A. STANDARD SPECIFICATIONS

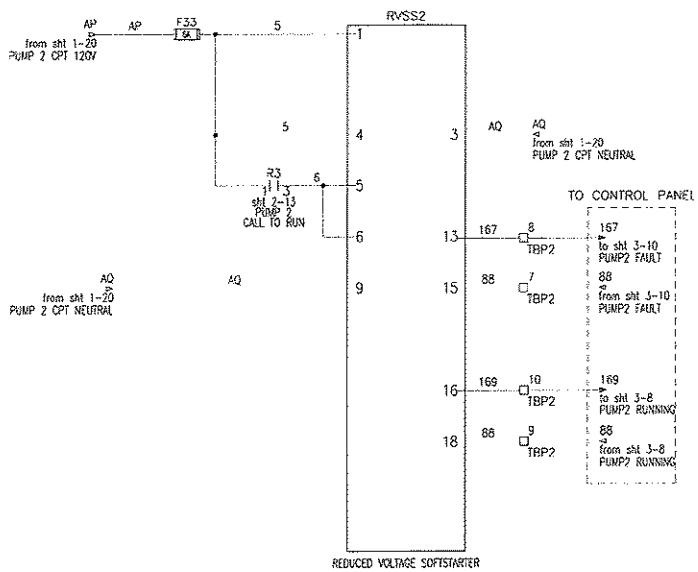

RVSS PARAMETERS
FAULT PARAMETERS –
FAULT RESET = YES

I/O PROGRAMMING PARAMETERS–
FAULT RELAY TYPE = FAILSAFE

REVISIONS	BY

IMPROVEMENTS TO WASTEWATER COLLECTION SYSTEM

LIFT STATION CONSTRUCTION DETAILS

ELECTRICAL STANDARDS

FINAL SUBMITTAL

EMERALD COAST UTILITIES AUTHORITY

APPROVED BY:

Drawn:
Designed:
Checked:
Date: MAY '13
Scale:
Project No:
Sheet No. 5
Of 18 Sheets

ALL WORK SHALL BE CONSTRUCTED IN ACCORDANCE WITH THE LATEST EDITION OF THE E.C.U.A. STANDARD SPECIFICATIONS

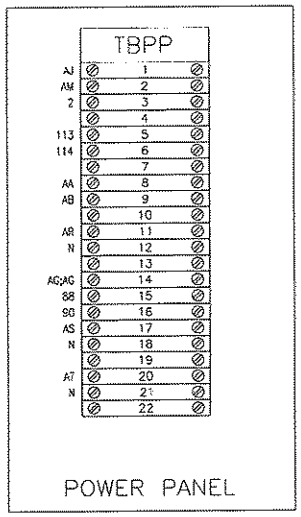

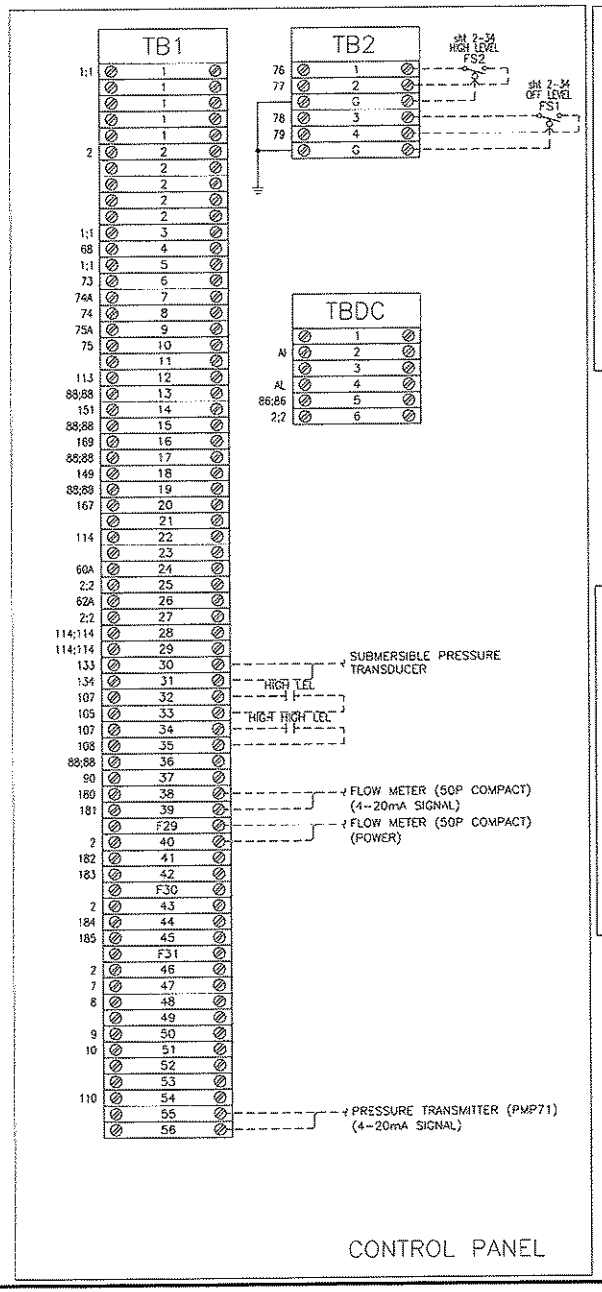

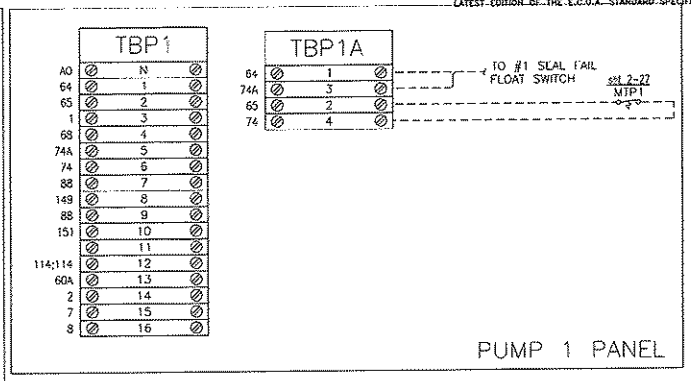

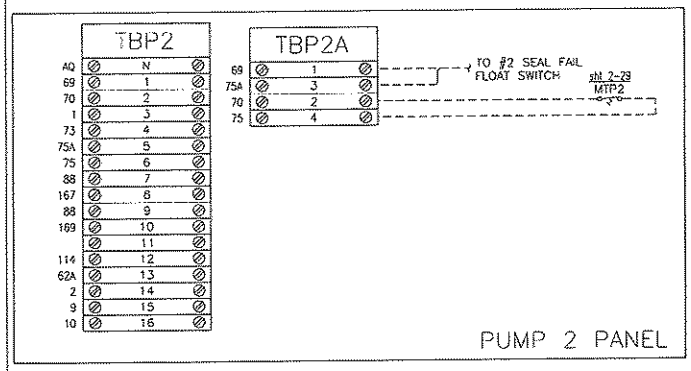

NOTES:

TERMINAL BLOCK DESIGNATIONS:
- TBPP – POWER PANEL TERMINAL BLOCK
- TB1 – CONTROL PANEL TERMINAL BLOCK
- TB2 – INTRINSICALLY SAFE TERMINAL BLOCK
- TBP1 – PUMP 1 TERMINAL BLOCK
- TBP1A – PUMP 1 TERMINAL BLOCK (MOTOR THERMAL AND SEAL FAILURE)
- TBP2 – PUMP 2 TERMINAL BLOCK
- TBP2A – PUMP 2 TERMINAL BLOCK (MOTOR THERMAL AND SEAL FAILURE)

TYPICAL FOR ALL TERMINAL BLOCKS ON THIS DRAWING

USE COPPER CONDUCTORS ONLY
75 DEG C (167 DEG F)
5.3–7.0 LB/IN TIGHTENING TORQUE

REVISIONS	BY

IMPROVEMENTS TO WASTEWATER COLLECTION SYSTEM

LIFT STATION CONSTRUCTION DETAILS

ELECTRICAL STANDARDS

FINAL SUBMITTAL

EMERALD COAST UTILITIES AUTHORITY

APPROVED BY:

Drawn:	
Designed:	
Checked:	
Date:	MAY '13
Scale:	
Project No:	
Sheet No.	6
Of	18 Sheets

ALL WORK SHALL BE CONSTRUCTED IN ACCORDANCE WITH THE LATEST EDITION OF THE E.C.U.A. STANDARD SPECIFICATIONS

NOTES

1. SEE SHEET 15 FOR SCHEDULES, LEGENDS AND PANEL TAGS.

ATTENTION

THIS LAYOUT IS ONE OF TWO (2) POSSIBLE CHOICES - SEE SHEET 7 FOR THE OTHER OPTION. IF THIS LAYOUT OPTION IS SELECTED, SEE SHEET 14A FOR ASSOCIATED RACK DETAILS.

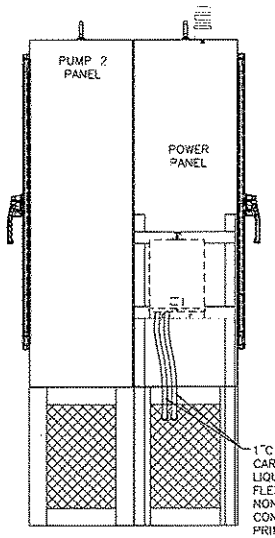

LEFT SIDE

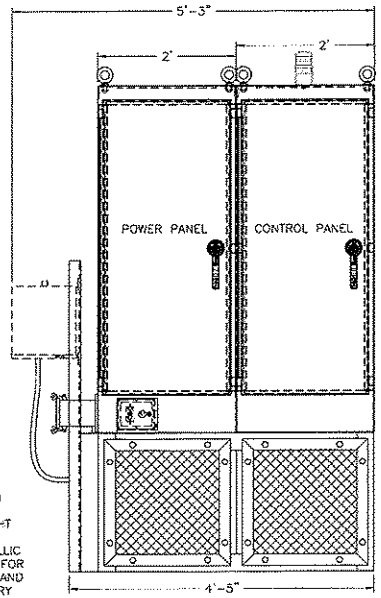

FRONT

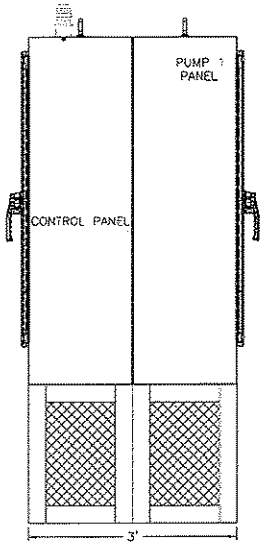

RIGHT SIDE

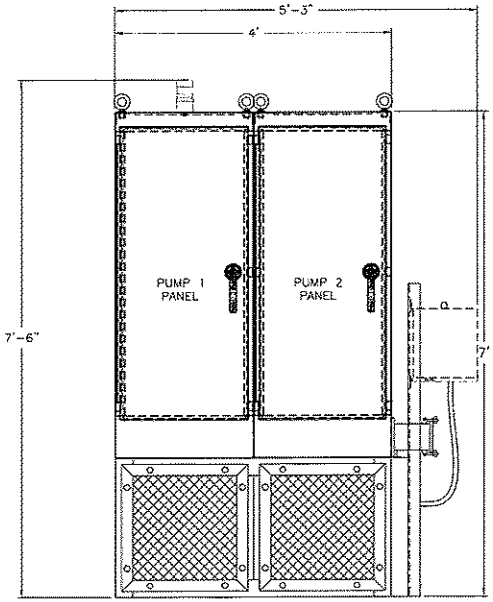

BACK

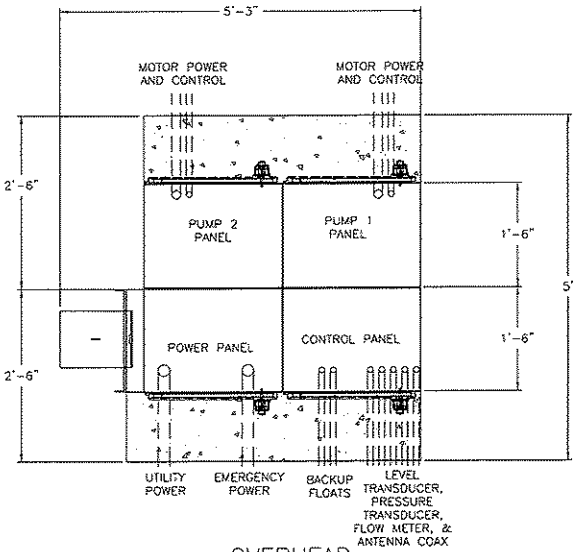

OVERHEAD

REVISIONS	BY

IMPROVEMENTS TO WASTEWATER COLLECTION SYSTEM

LIFT STATION CONSTRUCTION DETAILS

ELECTRICAL STANDARDS

FINAL SUBMITTAL

EMERALD COAST UTILITIES AUTHORITY

APPROVED BY:

Drawn:	
Designed:	
Checked:	
Date:	MAY '13
Scale:	
Project No:	
Sheet No.	7A
OF	18 Sheets

ALL WORK SHALL BE CONSTRUCTED IN ACCORDANCE WITH THE LATEST EDITION OF THE E.C.U.A. STANDARD SPECIFICATIONS

NOTES

1. SEE SHEET 15 FOR SCHEDULES, LEGENDS AND PANEL TAGS.
2. LAYOUT OF THE POWER & STARTER SECTIONS DEPICTS THE LARGEST POSSIBLE HORSEPOWER CONFIGURATION.

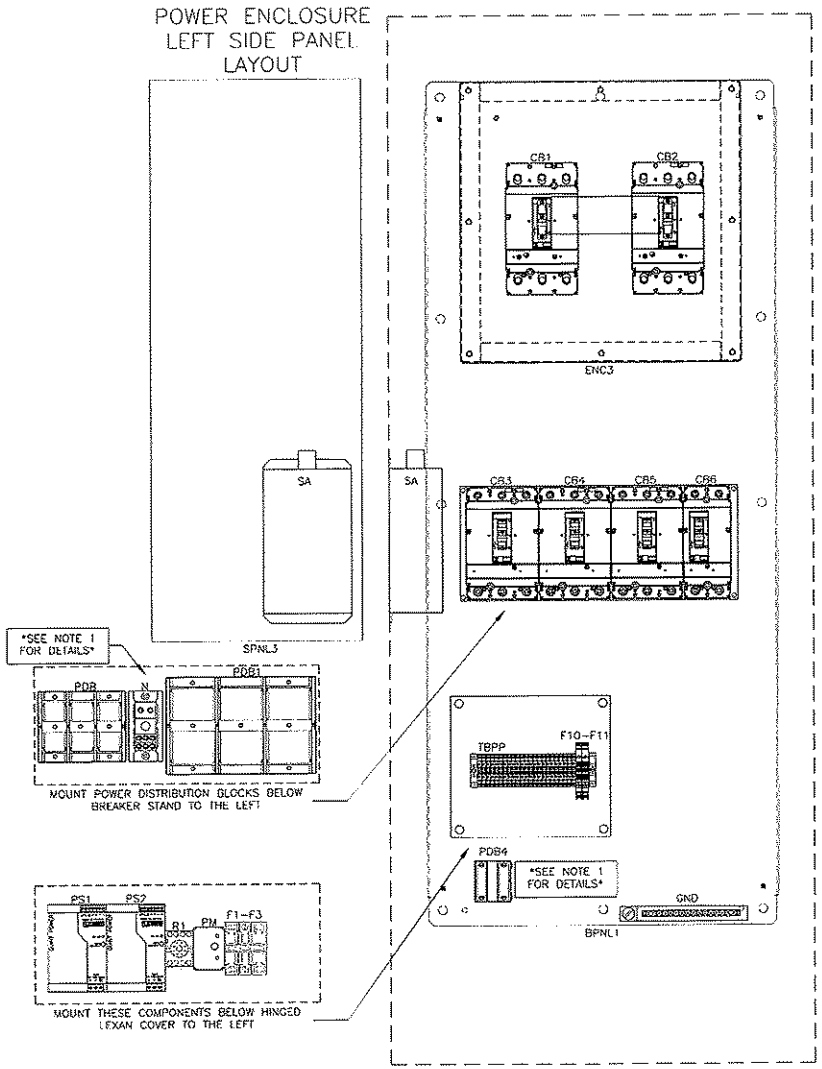

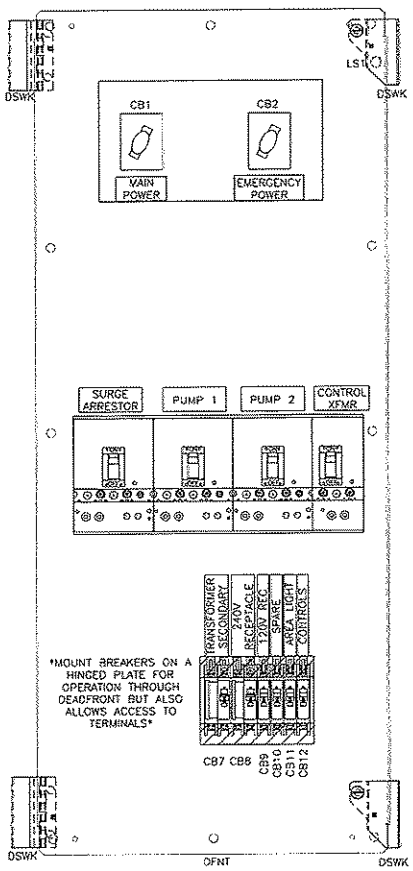

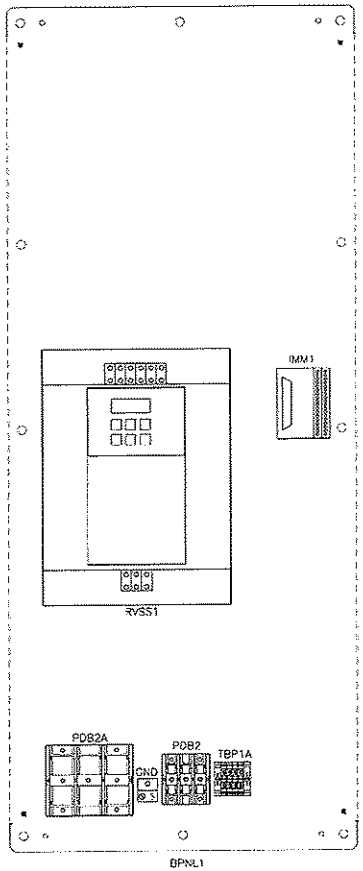

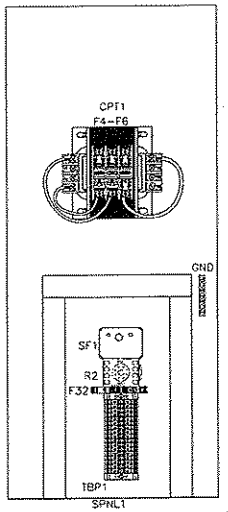

REVISIONS	BY

IMPROVEMENTS TO WASTEWATER COLLECTION SYSTEM

LIFT STATION CONSTRUCTION DETAILS

ELECTRICAL STANDARDS

FINAL SUBMITTAL

EMERALD COAST UTILITIES AUTHORITY

APPROVED BY:

Drawn:	
Designed:	
Checked:	
Date:	MAY '13
Scale:	
Project No:	
Sheet No.	8
	Of 18 Sheets

ALL WORK SHALL BE CONSTRUCTED IN ACCORDANCE WITH THE LATEST EDITION OF THE E.C.U.A. STANDARD SPECIFICATIONS

NOTES

1. SEE SHEET 15 FOR SCHEDULES, LEGENDS AND PANEL TAGS.
2. LAYOUT OF THE VFD SECTION DEPICTS THE LARGEST POSSIBLE HORSEPOWER CONFIGURATION.

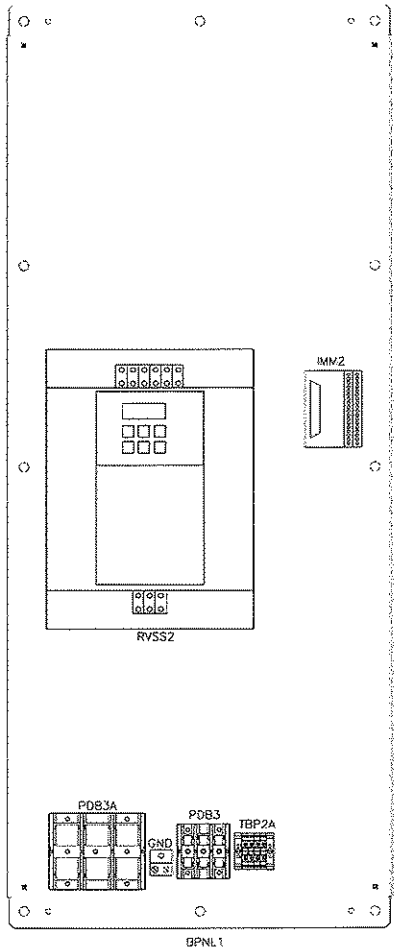

PUMP 2 ENCLOSURE BACKPANEL LAYOUT

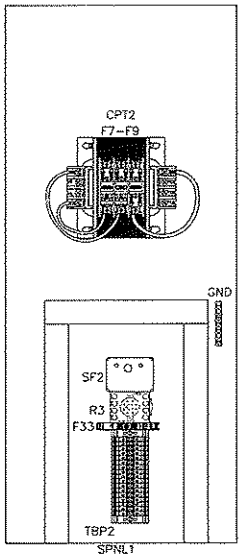

PUMP 2 ENCLOSURE RIGHT SIDEPANEL LAYOUT

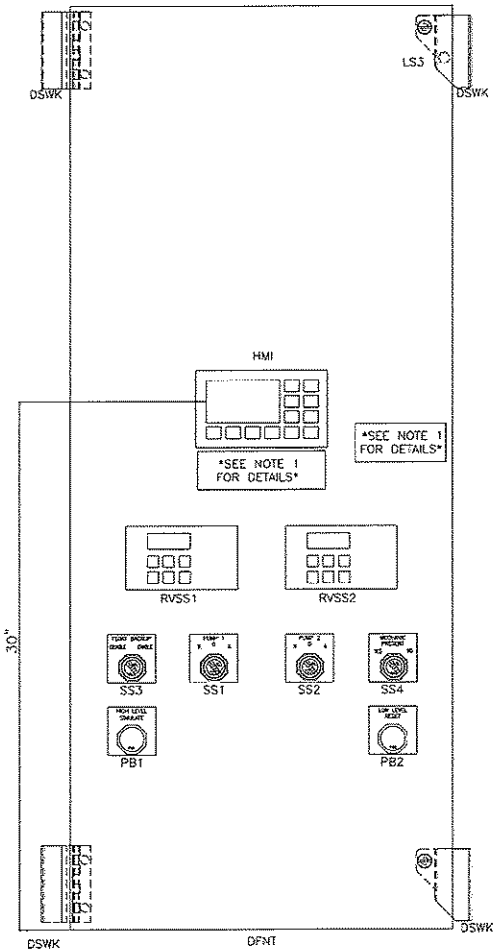

CONTROL PANEL DEADFRONT LAYOUT

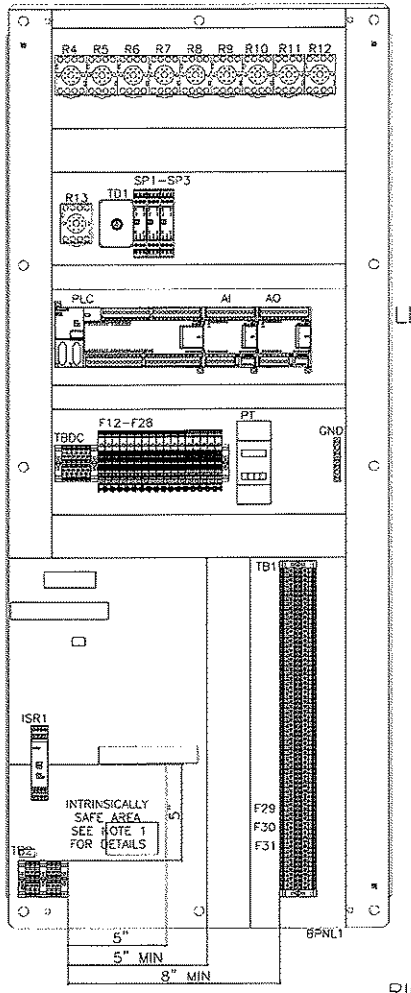

CONTROL ENCLOSURE BACKPANEL LAYOUT

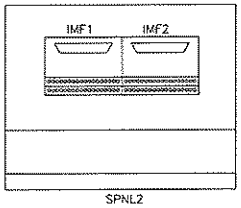

CONTROL ENCLOSURE LEFT SIDEPANEL LAYOUT

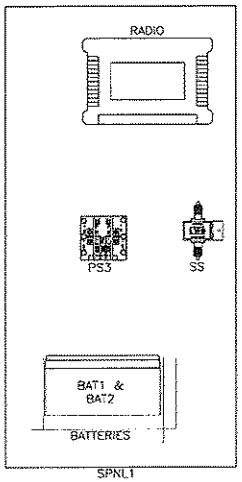

CONTROL ENCLOSURE RIGHT SIDEPANEL LAYOUT

REVISIONS	BY

IMPROVEMENTS TO WASTEWATER COLLECTION SYSTEM

LIFT STATION CONSTRUCTION DETAILS

ELECTRICAL STANDARDS

FINAL SUBMITTAL

EMERALD COAST UTILITIES AUTHORITY

APPROVED BY:

Drawn:	
Designed:	
Checked:	
Date:	MAY '13
Scale:	
Project No:	
Sheet No.	9
	Of 18 Sheets

480V RVSS Equipment List

Item	Tag	Panel	Description	Manufacturer	Model	Qty
1	ENC1	All	60X24X18 NEMA 4X SS Enclosure	Hoffman	A60241855FSN4	4
2	BPNL1	All	60x24 Painted Steel Backpanel	Hoffman	A60P24P1	4
3	SPNL1	Pump 1, 2 & Control	28"H x 12"W Aluminum Sidepanel	EWS	Custom	3
4	DFNT	Power & Control	60x24 Aluminum Deadfront Panel	EWS	Custom	2
5	OSWK	Power & Control	Door Swing Kit	Hoffman	ANADFK	2
6	FRM	All	Expanded Metal Stainless Steel Frame	EWS	SEE DRAWINGS	1
7	PDB	Power	Incoming Power Distribution Block PDB	Square D	SEE HP TABLE SHEET 11	1
8	PDB	Power	Incoming Power Distribution Block PDB Cover	Square D	SEE HP TABLE SHEET 11	1
9	GND	Power	Power Panel Ground Bar	Square D	PK15GTA-L	1
10	ENC3	Power	16"H x 16"W x 8"D Screw Cover Type 3R Enclosure	Hoffman	A16168GSC	1
11	CB1	Power	600V Main Circuit Breaker	Square D	SEE HP TABLE SHEET 11	1
12	CB2	Power	600V Emergency Circuit Breaker	Square D	SEE HP TABLE SHEET 11	1
13	CB1,CB2	Power	Mechanical Interlock for H/J Frame Circuit Breakers	Square D	S29369	1
14	CB1,CB2	Power	Door Mounted Rotary Handle for H/J Frame Circuit Breakers	Square D	S29338	2
15	GEN REC	Power	NEMA 4X Generator Receptacle	Appleton	AR20044RS	1
16	GEN REC	Power	NEMA 4X Generator Plug (Ship Loose)	Appleton	AP20044E-RS	1
17	PDB1	Power	Main Power Distribution Block	Square D	SEE HP TABLE SHEET 11	1
18	PDB1	Power	Main Power Distribution Block Cover	Square D	SEE HP TABLE SHEET 11	1
19	F1-F3	Power	3 Pole Rejection type Fuse Block	Bussmann	BC6033PQ	1
20	F1-F3	Power	1A Rejection Type Fuse, Class CC	Bussmann	KTK-R-1	3
21	F1-F3	Power	Fuse Cover	Bussmann	SAMI-7N	3
22	PM	Power	480V Phase Monitor	Timemark	A257B	1
23	PM	Power	480V, 8-Pin Relay Base	ABB	OT08PC	1
24	CB3-CB6	Power	Breaker Stand	EWS	Custom	1
25	CB3	Power	30A 480V 3 Pole Circuit Breaker, Main Surge Arrestor	Square D	HDL36030	1
26	SA	Power	Main Surge Arrestor	SSI	SDLA3M4	1
27	CB4, CB5	Power	600V 3 Pole Circuit Breaker, Starter	Square D	SEE HP TABLE SHEET 11	2
28	CB4,CB5	Power	H & J Frame Circuit Breaker Locking System	Square D	S29371	2
29	PDB2A, PDB3A	Pump 1 & 2	Power Distribution Block	Square D	SEE HP TABLE SHEET 11	2
30	PDB2A, PDB3A	Pump 1 & 2	Power Distribution Block Cover	Square D	SEE HP TABLE SHEET 11	2
31	RVSS1, RVSS2	Pump 1 & 2	480V Reduced Voltage Soft Starter	Solcon	SEE HP TABLE SHEET 11	2
32	RVSS1, RVSS2	Control	Remote keypad for Solcon RVS-DN SoftStarter	Solcon	DISP6640043	2
33	IMM1, IMM2	Pump 1 & 2	FLKM-037 SUB/S Interface Cable Male	Phoenix Contact	2281115	2
34	IMF1, IMF2	Control	FLKM-037 SUB/B Interface Cable Female	Phoenix Contact	2281212	2
35	IMM1, IMM2, IMF1, IMF2	Pump 1, 2 & Control	37 Pin D-Sub Cable, DB-37 Male to DB-37 Female	GC Electronics	45-463	2
36	SPNL2	Control	10"H x 12"W Aluminum Sidepanel	EWS	Custom	1
37	GND	Pump 1 & 2	Power Panel to Starter Panel Ground	NSI	2-0T	2
38	PDB2, PDB3	Pump 1 & 2	Motor Power Distribution Block PDB2&3, (1)#14-2/0.....(1)#14-2/0	Square D	9080LBA362101	2
39	PDB2, PDB3	Pump 1 & 2	Motor Power Distribution Block PDB2&3 Cover	Square D	9080LB23	2
40	F4, F5, F7, F8	Pump 1 & 2	3-1/2A Rejection Type Fuse, RVSS CPT Primary	Bussmann	FNQ-R-3-1/2	4
41	CPT1, CPT2	Pump 1 & 2	480/120V 750VA Transformer	Square D	9070TF750D1	2
42	CPT1, CPT2	Pump 1 & 2	Transformer Finger Safe Cover, VFD CPT Primary	Square D	9070FSC-2	2
43	CPT1, CPT2	Pump 1 & 2	Fuse Puller, RVSS CPT	Square D	9070FP-1	2
44	F6, F9	Pump 1 & 2	10A Fuse, RVSS CPT Secondary	Bussmann	FNQ-10	2
45	CB6	Power	25A 480V 2 Pole Circuit Breaker, XF1 Transformer Primary	Square D	HDL26025	1
46	XF1	Power	5kVA 480V/240-120V Transformer, NEMA 3R Stainless Steel	Square D	S51FSS	1
47	CB7-CB13	Power	Hinged Aluminum Bracked for Mounting 240/120V Circuit Breakers through Deadfront	EWS	Custom	1
48	CB7	Power	30A 240/120V 2 Pole Circuit Breaker, XF1 Transformer Secondary	Square D	QOU230	1
49	PDB4	Power	240V/120V Power Distribution Block PDB4, (1) #14-2 ... (4) #18-10	Square D	9080LBA361104	1
50	CB8	Power	20A, 240V, 2 Pole Circuit Breaker	Square D	QOU220	1
51	REC1	Power	20A, 250V, 6-20R Receptacle	P&S	5872I	1
52	CB9, CB10	Power	20A, 120V 1 Pole Circuit Breaker	Square D	QOU120	2
53	REC2	Power	120V 20A GFCI Duplex Receptacle NEMA5-20R	P&S	2094-I	1
54	REC1, REC2	Power	Custom Receptacle Cover NEMA 4X S.S.	HOFFMAN	HIDRPSS-MOD	1
55	REC1, REC2	Power	3/4 1G AL FD BOX	Appelton	4CS-1/2	2
56	CB11	Power	15A, 120V, 1 Pole Circuit Breaker	Square D	QOU115	1
57	CB12	Power	10A, 120V, 1 Pole Circuit Breaker	Square D	QOU110	1
58	R1	Power	120V 3PDT General Purpose Relay w/ Indicator Lamp	Potter Brumfield	KRPA-14AN-120	1
59	R1-R13, SF1, SF2	All	11 Pin Relay Base	ABB	ND5-11	15
60	F10, F11	Power	Fused Terminal Block w/ 120V Blown Fuse Indication	Allen Bradley	1492-H4	4
61	-	Power & Control	1492-H4 &H5 Fused Terminal Block End Cover	Allen Bradley	1492-N37	2
62	F10, F11	Power	3A Fuse, Power Supply Primary	Bussmann	AGC-3	2
63	PS1, PS2	Power	10A 24VDC Power Supply	Phoenix Contact	2938504	2
64	D1, D2	Power	10A Diode, P1000A	Newark	51R7094	2
65	-	Power	Custom Stand/Lexan Hinged Cover w/Alum Stand for TBPP & Power Supply Fuses	EWS	Custom	1
66	F12-F28	Control	Fused Terminal Block w/ 24VDC Blown Fuse Indication	Allen Bradley	1492-H5	17

480V RVSS Equipment List

Item	Tag	Panel	Description	Manufacturer	Model	Qty
67	F12-F15	Control	10A Fuse, Power Supply Secondary & Batteries	Bussmann	AGC-10	4
68	BAT1, BAT2	Control	12VDC Battery	Power Sonic	PS1290	2
69	PS3	Control	24VDC-15VDC Converter, 2A	Vicor	V1-J12-EY-B1	1
70	RADIO	Control	400MHz Radio	GE MDS	5004MD	1
71	RADIO	Control	DB9 Male/Male Gender Changer	Office Depot	946660	1
72	RADIO/SS	Control	3 Foot LMR400UF Coaxial Jumper NMale to TNCMale	Tessco	324503	1
73	SS	Control	Coaxial Surge Suppressor, 50-700MHz	Polyphaser	IS-50NX-C1	1
74	-	-	50FT Coaxial Cable, NMale-Nmale, Wireless Solutions 400-07-07-P50 (Ship Loose)	Tessco	370875	1
75	-	-	400MHz Yagi Antenna w/ N Female Connector, MAXRAD MYA4506N (Ship Loose)	Tessci	37634	1
76	-	-	Antenna Tower 5' Base Section, ROHN R-SB25GS (Ship Loose)	Tessco	64559	1
77	-	-	Antenna Tower 10' Mid Section, ROHN R-25G (Ship Loose)	Tessco	56866	1
78	-	-	Antenna Tower 9' Top Section, ROHN R-25AG2 (Ship Loose)	Tessco	70080	1
79	-	-	21' 1-1/4" S.S. Antenna Mast (Ship Loose)	Bell Steel	023005	1
80	F18, F19	Control	1/4A Fuse	Bussmann	AGC-1/4	2
81	F16, F17, F23, F24	Control	2A Fuse	Bussmann	AGC-2	4
82	SS1, SS2	Control	3 Position Selector Switch, 30MM	Square D	9001SK43BH2	2
83	R2-R13	Control	24VDC 3PDT General Purpose Relay w/ Indicator Lamp	Potter Brumfield	KRPA-14DN-24	12
84	SF1, SF2	Control	120V Seal Failure Relay	ATC	SPM-120-AAA-10K	2
85	ISB1	Control	Intrinsically Safe Barrier Relay, 24VDC	Pepperl & Fuchs	KFD2-SR2-Ex2.W	1
86	TB2	Control	Terminal Block, Blue TB2	Phoenix Contact	3044115	4
87	TB2	Control	Terminal Block, Blue End Barrier, TB2	Phoenix Contact	3047235	1
88	TB2	Control	Ground Terminal Blocks, TB2	Phoenix Contact	3044128	2
89	PB1, PB2	Control	Push Button, Black 1NO 1NC	Square D	9001SKR1BH13	2
90	SS3, SS4	Control	2 Position Selector Switch, 30MM	Square D	9001SK51BH2	2
91	TD1	Control	24VDC 0-180 Second Time Delay Relay	Square D	RE48ATM12MW	1
92	TD1	Control	8 Pin Relay Base	ABB	ND5-8	1
93	AL	Control	24VDC Red Alarm Light	Federal Signal	LP3M-012-048R	1
94	F20, F27, F28	Control	1/10A Fuse	Bussmann	AGC-1/10	3
95	HMI	Control	TD400C Text Display	Siemens	6AV6 640-0AA00-0AX1	1
96	F21, F22	Control	1A Fuse	Bussmann	AGC-1	2
97	PLC	Control	S7-200 Dual Com Port Processor w/ 24 DI & 16 DO Points	Siemens	6ES7 216-2AD23-0XB0	1
98	AI	Control	S7-200 4 Point AI Module	Siemens	6ES7 231-0HC22-0XA0	1
99	AO	Control	S7-200 2 Point AO Module	Siemens	6ES7 232-0HB22-0XA0	1
100	PLC	Control	S7-200 Communication cable PC/PP1 RS-232/485	Siemens	6ES7 901-3CB30-0XA0	1
101	SP1-SP3	Control	Plug In D1 Surge Suppression, PT 4x1...DC	Phoenix Contact	2838322	3
102	SP1-SP3	Control	Terminal Block Base for Plugable Surge Supression, PT 4x1-BE	Phoenix Contact	2839363	3
103	LS1-LS4	Control	Panel Intrusion Switches, N.C. Contacts	NSI	76030PS	4
104	F25	Control	1-1/2A Fuse	Bussmann	AGC-1-1/2	1
105	F26	Control	3/4A Fuse	Bussmann	AGC-3/4	1
106	PT	Control	Level Transmitter	Endress & Hauser	RMA42AAAH2	2
107	PT	-	Submersible Level Transducer, 20ft Range w/ 60ft Cable & Mounting Clamp (Ship Loose)	Endress & Hauser	FMX21-FE221GGE21APO	1
108	F29-F31	Control	24VDC Fused Terminal Block With Indication	Phoenix Contact	3046090	3
109	F29-F31	Control	1/4A Fuse, Analog Inputs	Bussmann	GMA-250	3
110	VR1, VR2	Control	6A Fuse, RVSS Control Power	BUssmann	AGC-6	2
111	TBPP,1,DC,P1, 1A, P2 & 2A	All	Terminal Block, Gray 26-10 AWG Wire	Phoenix Contact	3044102	126
112	TBPP,1,DC,P1, 1A, P2 & 2A	All	Terminal Block End Barrier	Phoenix Contact	3047028	8
113	TBPP,1,DC,P1, 1A, P2 & 2A	All	Terminal Block End Anchor	Phoenix Contact	0800886	17
114	TBP1A, TBP2A	Pump 1 & 2	Terminal Block, Gray 26-8 AWG Wire, TBVFD1A & TBVFD2A	Phoenix Contact	3044131	8
115	GND	Control	Control Panel Ground Bar	Square D	PK5GTA	3
116		-	Meter Socket (SHIP LOOSE)	Milbank	SEE HP TABLE SHEET 11	1
117	-	-	Stainless Steel 60' Float (SHIP LOOSE)	Anchor Scientific	P60NO-SST	2
118	-	-	Insulated Ground Neutral (SHIP LOOSE)	Square D	SN400LA	1
119	-	-	Ground Bar Kit (SHIP LOOSE)	Square D	PKDGTJ250	1
120	-	-	NEMA 4A S.S. Disconnect (SHIP LOOSE)	Square D	J2500S	1
121	-	-	Antenna Mast Stabilization Plate (Ship Loose)	EWS	Custom	1
122	-	-	Stainless Steel 'U' Bolt, 2" Pole, 5/16" Diameter Bolt w/ 2-1/2" Threads (SHIP LOOSE)			1
123	-	-	5/16" Stainless Steel Flat Washer for 'U' Bolt (SHIP LOOSE)			2
124	-	-	5/16" Stainless Steel Lock Washer for 'U' Bolt (SHIP LOOSE)			2
125	-	-	5/16" Stainless Steel Nut for 'U' Bolt (SHIP LOOSE)			2
126	-	-	Stainless Steel 'U' Bolt, 1/4" Diameter (SHIP LOOSE)			2
127	-	-	1/4" Stainless Steel 1/4" Nut for 'U' Bolt (SHIP LOOSE)			4
128	-	-	1-1/4" Reduction Bushing for Antenna Tower, ROHN R-TBS0 (SHIP LOOSE)	Tessco	36882	1
129	PLC	Control	S7-200 Memory Module	Siemens	6ES7 2918GF230AX0	1
130	N	Power	Generator Neutral Block, (1)#6-400kcmil ... (6)#14-2	Square D	9080LBA163106	1
131	N	Power	Generator Neutral Block Cover	Square D	9080LB31	1
132	SPNL3	Power	32"X12" Aluminum Sidepanel	EWS	Custom	1
133	FM	Control	Flow Meter	Endress & Hauser	50P Compact	1
134	PR	Control	Pressure Transmitter	Endress & Hauser	PMP71-AAC1PG1RAA	1

ALL WORK SHALL BE CONSTRUCTED IN ACCORDANCE WITH THE LATEST EDITION OF THE E.C.U.A. STANDARD SPECIFICATIONS

REVISIONS	BY

IMPROVEMENTS TO WASTEWATER COLLECTION SYSTEM

LIFT STATION CONSTRUCTION DETAILS

ELECTRICAL STANDARDS

FINAL SUBMITTAL

EMERALD COAST UTILITIES AUTHORITY

APPROVED BY:

Drawn	
Designed	
Checked	
Date	MAY '13
Scale	
Project No.	
Sheet No.	10
	OF 18 Sheets

ALL WORK SHALL BE CONSTRUCTED IN ACCORDANCE WITH THE LATEST EDITION OF THE E.C.U.A. STANDARD SPECIFICATIONS

Horsepower Related Compontents Equipment List

Item	Tag	Horsepower				
		20	30	40	50	60
Incoming Power Distribution Block	PDB	9080LBA362101	9080LBA363101	9080LBA363101	9080LBA363101	9080LBA363101
Incoming Power Distribution Block Cover	PDB	9080LB23	9080LB33	9080LB33	9080LB33	9080LB33
Main Circuit Breaker	CB1	HDL36110	HDL36150	JDL36175	JDL36200	JDL36225
Emergency Circuit Breaker	CB2	HDL36110	HDL36150	JDL36175	JDL36200	JDL36200
Main Power Distribution Block	PDB1	9080LBA363206	9080LBA365208	9080LBA365208	9080LBA365208	9080LBA365208
Main Power Distribution Block Cover	PDB1	9080LB33	9080LB53	9080LB53	9080LB53	9080LB53
Starter Circuit Breaker	CB4, CB5	HDL36060	HDL36080	HDL36090	HDL36100	HDL36110
Motor Power Distribution Block	PDB2A, PDB3A	9080LBA362104	9080LBA362104	9080LBA363104	9080LBA363104	9080LBA363104
Motor Power Distribution Block Cover	PDB2A, PDB3A	9080LB23	9080LB23	9080LB33	9080LB33	9080LB33
480V RVSS	RVSS1, RVSS2	RVS-DN-44-480-115-3+M+8+9+D+U-S	RVS-DN-44-480-115-3+M+8+9+D+U-S	RVS-DN-58-480-115-3+M+8+9+D+U-S	RVS-DN-72-480-115-3+M+8+9+D+U-S	RVS-DN-85-480-115-3+M+8+9+D+U-S
Meter Socket	-	UAP9701-RRL	UAP9701-RRL	UAP9701-RRL	UAP3566-X-HSP	UAP3566-X-HSP

Horsepower Related Power Conductors, CGB's and Hubs

Conductor Tag		Horsepower				
		20	30	40	50	60
P-01, P-03 & P-04	Description	(3)#2	(3)#1	(3)#2/0	(3)#3/0	(3)#4/0
	Manufacturer	N/A	N/A	N/A	N/A	N/A
	Catalog #	N/A	N/A	N/A	N/A	N/A
	Length (Max Ft)	N/A	N/A	N/A	N/A	N/A
	Cable Dia (in)	0.384"	0.446"	0.532"	0.584"	0.642"
	Appleton Connector	(3) -CG-3150	(3) -CG-3775	(3) -CG-5075	(3) -CG-5075	(3) -CG-6275
	Connector Range	0.312"-0.437"	0.375"-0.500"	0.500"-0.625"	0.500"-0.625"	0.625"-0.750"
	Meyers Hub	(3) 1/2" - STA-1	(3) 3/4" - STA-2	(3) 3/4" - STA-2	(3) 3/4" - STA-2	(3) 3/4" - STA-2
P-02A	Description	(1)#6	(1)#6	(1)#6	(1)#6	(1)#4
	Manufacturer	N/A	N/A	N/A	N/A	N/A
	Catalog #	N/A	N/A	N/A	N/A	N/A
	Length (Max Ft)	N/A	N/A	N/A	N/A	N/A
	Cable Dia (in)	0.254"	0.254"	0.254"	0.254"	0.324"
	Appleton Connector	(1)-GC-1850	(1)-GC-1850	(1)-GC-1850	(1)-GC-1850	(1)-GC-3150
	Connector Range	0.187"-0.312"	0.187"-0.312"	0.187"-0.312"	0.187"-0.312"	0.312"-0.437"
	Hub	(1) 1/2" - STA-1	(1) 1/2" - STA-1	(1) 1/2" - STA-1	(1) 1/2" - STA-1	(1) 1/2" - STA-1
P-02B	Description	(1)#6	(1)#6	(1)#6	(1)#6	(1)#4
	Manufacturer	Southwire	Southwire	Southwire	Southwire	Southwire
P-05 & P-06	Description	(3)#2	(3)#1	(3)#2/0	(3)#3/0	(3)#3/0
	Manufacturer	N/A	N/A	N/A	N/A	N/A
	Catalog #	N/A	N/A	N/A	N/A	N/A
	Length (Max Ft)	N/A	N/A	N/A	N/A	N/A
	Cable Dia (in)	0.384"	0.446"	0.532"	0.584"	0.584"
	Appleton Connector	(3) -CG-3150	(3) -CG-3775	(3) -CG-5075	(3) -CG-5075	(3) -CG-5075
	Connector Range	0.312"-0.437"	0.375"-0.500"	0.500"-0.625"	0.500"-0.625"	0.500"-0.625"
	Hub	(3) 1/2" - STA-1	(3) 3/4" - STA-2	(3) 3/4" - STA-2	(3) 3/4" - STA-2	(3) 3/4" - STA-2
P-07 & P-09	Description	(3)#8 W/G, TC	(3)#6 W/G, TC	(3)#2 W/G, TC	(3)#2 W/G, TC	(3)#2 W/G, TC
	Manufacturer	Houston Wire	Houston Wire	Houston Wire	Houston Wire	Houston Wire
	Catalog #	HW 154 00803	HW 154 00603	HW 154 00203	HW 154 00203	HW 154 00203
	Length (Max Ft)	19 FT	19 FT	19 FT	19 FT	19 FT
	Cable Dia (in)	0.58"	0.69"	1.03"	1.03"	1.03"
	Appleton Connector	(2) - CG-5075	(2) - CG-6275	(2) - CG-100125	(2) - CG-100125	(2) - CG-100125
	Connector Range	0.500"-0.625"	0.625"-0.750"	1.000"-1.125"	1.000"-1.125"	1.000"-1.125"
	Hub	(2) 3/4" - STA-2	(2) 3/4" - STA-2	(2) 1-1/4" - STA-4	(2) 1-1/4" - STA-4	(2) 1-1/4" - STA-4
P-08 & P-10	Description	(3)#8	(3)#6	(3)#2	(3)#2	(3)#2
	Manufacturer	Southwire	Southwire	Southwire	Southwire	Southwire

REVISIONS	BY

IMPROVEMENTS TO WASTEWATER COLLECTION SYSTEM

LIFT STATION CONSTRUCTION DETAILS

ELECTRICAL STANDARDS

FINAL SUBMITTAL

ECUA
EMERALD COAST UTILITIES AUTHORITY

APPROVED BY:

Drawn:
Designed:
Checked:
Date: MAY '13
Scale:
Project No:
Sheet No. 11
Of 18 Sheets

ALL WORK SHALL BE CONSTRUCTED IN ACCORDANCE WITH THE LATEST EDITION OF THE E.C.U.A. STANDARD SPECIFICATIONS

Power & Control Conductors, CGB's and Hubs

Cable Number	Description	Manufacturer	Catalog Numer	Length (Max Ft)	Cable Diameter	Appleton Liquidtight Cable Connector	Connector Cable Range	Crouse-Hinds Myers Hub	From Panel/Enclosure	To Panel/Enclosure
P-13	(3)#8 AWG W/GND, Tray Cable	Houston Wire & Cable	HW 154 00803	6 FT	0.58"	(1) - CG-5075	0.500"-0.625"	(1) 3/4" - STA-2	Power Panel	480/240-120V Transformer
P-14	(3)#6 AWG W/GND, Tray Cable	Houston Wire & Cable	HW 154 00603	6 FT	0.69"	(1) - CG-6275	0.625"-0.750"	(1) 3/4" - STA-2	480/240-120V Transformer	Power Panel
P-15	3-1/C #12 AWG	N/A	N/A	AS REQ'D	N/A	N/A	N/A	N/A	Power Panel	Power Panel
P-16	3-1/C #12 AWG	N/A	N/A	AS REQ'D	N/A	N/A	N/A	N/A	Power Panel	Power Panel
C-01	(16) #14 AWG, Tray Cable	Houston Wire & Cable	HW 151 01416	24 FT	0.68"	(2) - CG-6275	0.625"-0.750"	(2) 3/4" - STA-2	Power Panel	Control Panel
C-02	(16) #14 AWG, Tray Cable	Houston Wire & Cable	HW 151 01416	22 FT	0.68"	(2) - CG-6275	0.625"-0.750"	(2) 3/4" - STA-2	Pump 1 Panel	Control Panel
C-03	(16) #14 AWG, Tray Cable	Houston Wire & Cable	HW 151 01416	19 FT	0.68"	(2) - CG-6275	0.625"-0.750"	(2) 3/4" - STA-2	Pump 2 Panel	Control Panel
C-04	1 Pair #16 SH, Tray Cable	Houston Wire & Cable	HW 120 01601	22 FT	0.33"	(2) - CG-2575	0.250"-0.375"	(2) 3/4" - STA-2	Pump 1 Panel	Control Panel
C-05	1 Pair #16 SH, Tray Cable	Houston Wire & Cable	HW 120 01601	19 FT	0.33"	(2) - CG-2575	0.250"-0.375"	(2) 3/4" - STA-2	Pump 2 Panel	Control Panel
PUMP 1-PWR	Per Mfg Specs	N/A	N/A	N/A	N/A	CG Series based on Mfg Specs	N/A	STA Series based on Mfg Specs	Field (Pump 1)	Pump 1 Panel
PUMP 1-MTP	Per Mfg Specs	N/A	N/A	N/A	N/A	CG Series based on Mfg Specs	N/A	STA Series based on Mfg Specs	Field (Pump 1)	Pump 1 Panel
PUMP 1-SF	Per Mfg Specs	N/A	N/A	N/A	N/A	CG Series based on Mfg Specs	N/A	STA Series based on Mfg Specs	Field (Pump 1)	Pump 1 Panel
PUMP 2-PWR	Per Mfg Specs	N/A	N/A	N/A	N/A	CG Series based on Mfg Specs	N/A	STA Series based on Mfg Specs	Field (Pump 2)	Pump 2 Panel
PUMP 2-MTP	Per Mfg Specs	N/A	N/A	N/A	N/A	CG Series based on Mfg Specs	N/A	STA Series based on Mfg Specs	Field (Pump 2)	Pump 2 Panel
PUMP 2-SF	Per Mfg Specs	N/A	N/A	N/A	N/A	CG Series based on Mfg Specs	N/A	STA Series based on Mfg Specs	Field (Pump 2)	Pump 2 Panel
Float Switch 1	Float Switch Cable	BY OTHERS	N/A	N/A	0.56"	(1) - CG-5050	0.500"-0.625"	(1) 1/2" - STA-1	Field (Float Switch)	Control Panel
Float Switch 2	Float Switch Cable	BY OTHERS	N/A	N/A	0.56"	(1) - CG-5050	0.500"-0.625"	(1) 1/2" - STA-1	Field (Float Switch)	Control Panel
Pressure Xducer	Pressure Transducer Cable	BY OTHERS	N/A	N/A	0.35"	(1) - G-3150	0.312"-0.437"	(1) 1/2" - STA-1	Field (Float Switch)	Control Panel
Antenna COAX	Coaxial Cable	BY OTHERS	N/A	N/A	0.408"	(1) - CG-3750	0.375"-0.500"	(1) 1/2" - STA-1	Field (Antenna)	Control Panel
Comm-1	(37) #18 AWG, Tray Cable	Houston Wire & Cable	HW15001837	20 FT	0.74"	(1) - CG-6275	0.625"-0.750"	(1) 3/4" - STA-2	Control Panel	Pump 1 Panel
Comm-2	(37) #18 AWG, Tray Cable	Houston Wire & Cable	HW15001837	20 FT	0.74"	(1) - CG-6275	0.625"-0.750"	(1) 3/4" - STA-2	Control Panel	Pump 2 Panel

REVISIONS	BY

IMPROVEMENTS TO WASTEWATER COLLECTION SYSTEM

LIFT STATION CONSTRUCTION DETAILS

ELECTRICAL STANDARDS

FINAL SUBMITTAL

ECUA EMERALD COAST UTILITIES AUTHORITY

APPROVED BY:

Drawn:
Designed:
Checked:
Date: MAY '13
Scale:
Project No:
Sheet No. 12
Of 18 Sheets

ALL WORK SHALL BE CONSTRUCTED IN ACCORDANCE WITH THE LATEST EDITION OF THE E.C.U.A. STANDARD SPECIFICATIONS

NOTES:

1) ALL SPARE WIRE WILL BE CLEARLY LABELED WITH THE CABLE NUMBER & A SPARE DESIGNATION ON INDIVIDUAL WIRES. THESE SPARES WILL BE LONG ENOUGH TO REACH ANY POINT IN THE PANEL.
2) SPARE CONDUCTORS SHOULD BE TRIMMED AND HEAT SHRINK SHOULD BE USED TO SECURE THE SPARE CONDUCTORS IN THE CABLE.
3) THE INNER CONNECTING CONDUCTORS BETWEEN THE PANELS ARE CODED AS FOLLOWS: THE FIRST GROUP OF CHARACTER IS THE WIRE NUMBER AND THE SECOND GROUP IS THE COLOR (I.E. 1(BK) SIGNIFIES THAT THE WIRE NUMBER IS 1 AND THE COLOR IS BLACK). WIRE COLOR CODE AS FOLLOWS: BK-BLACK, RD-RED, BU-BLUE, OR-ORANGE, YL-YELLOW, BN-BROWN. FOR COLORS THAT ARE DENOTED AS XX/YY, XX IS THE BASE COLOR AND YY IS THE SPIRAL STRIPE (I.E. RD/BK IS A RED WIRE WITH A BLACK SPIRAL STRIPE).
4) SEE SHEETS 11 & 12 FOR PANEL TO PANEL INNER CONNECTING CONDUCTOR AND CABLE DETAILS.

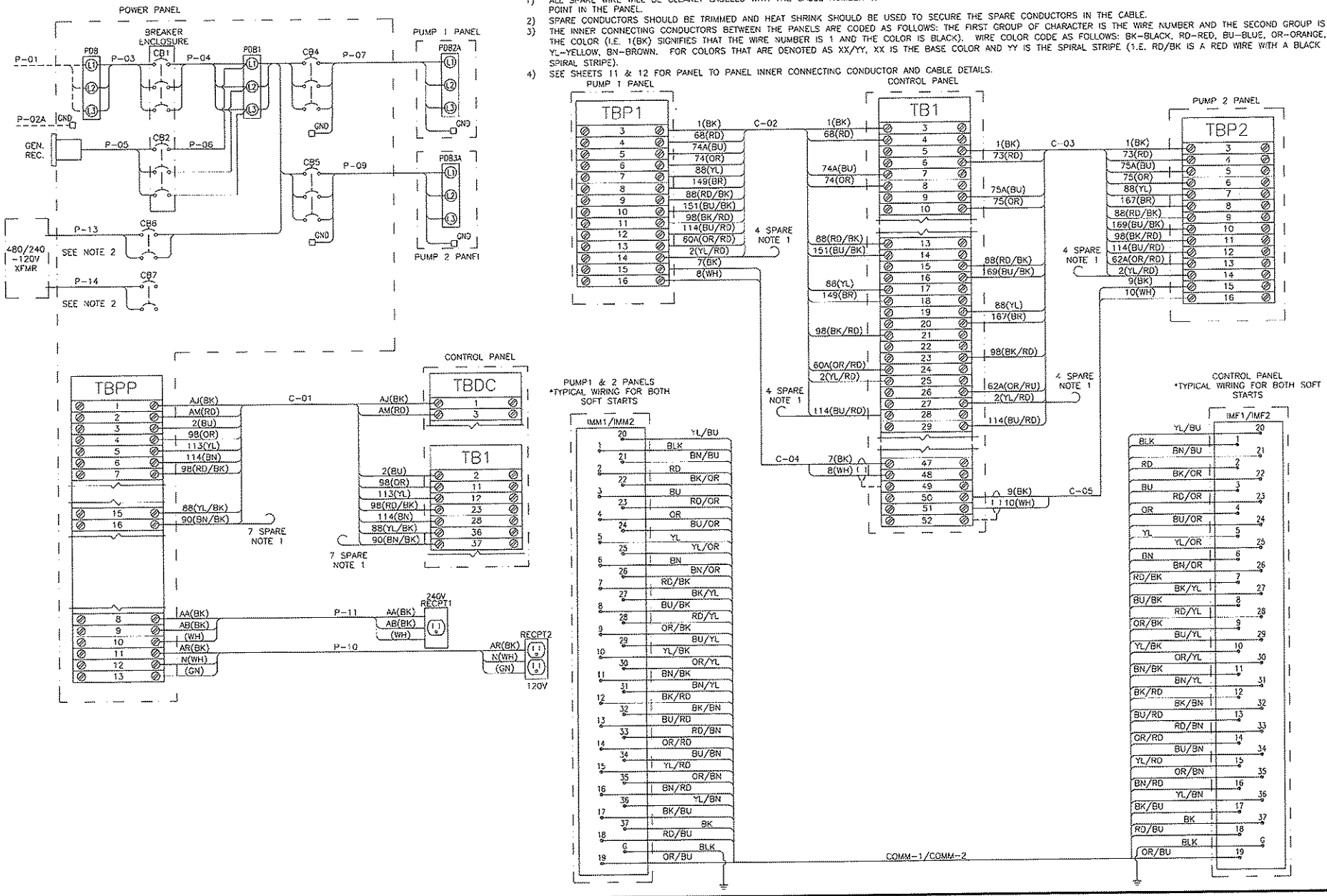

REVISIONS	BY

IMPROVEMENTS TO WASTEWATER COLLECTION SYSTEM

LIFT STATION CONSTRUCTION DETAILS

ELECTRICAL STANDARDS

FINAL SUBMITTAL

EMERALD COAST UTILITIES AUTHORITY

APPROVED BY:

Drawn:	
Designed:	
Checked:	
Date:	MAY '13
Scale:	
Project No:	
Sheet No.	13
	OF 18 Sheets

ALL WORK SHALL BE CONSTRUCTED IN ACCORDANCE WITH THE LATEST EDITION OF THE E.C.U.A. STANDARD SPECIFICATIONS

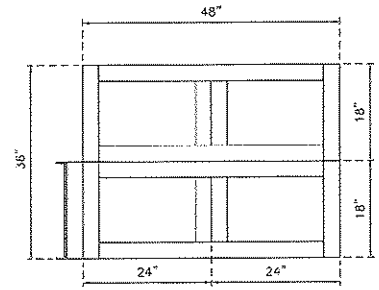

TOP VIEW

NOTES:

1. TOP AND BOTTOM OF BASE TO BE LEFT OPEN.
2. DRILL TOP OF BASE TO ATTACH ENCLOSURES AS REQUIRED.
3. DRILL BOTTOM OF BASE TO ATTACH TO SLAB AS REQUIRED.

ATTENTION

THIS LAYOUT IS ONE OF TWO (2) POSSIBLE CHOICES - SEE SHEET 14 FOR THE OTHER OPTION. IF THIS LAYOUT OPTION IS SELECTED, SEE SHEET 7A FOR ASSOCIATED PANEL LAYOUT DETAILS.

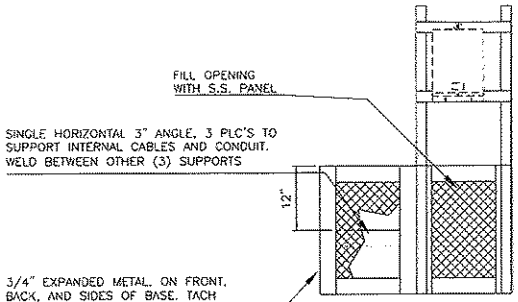

END VIEW

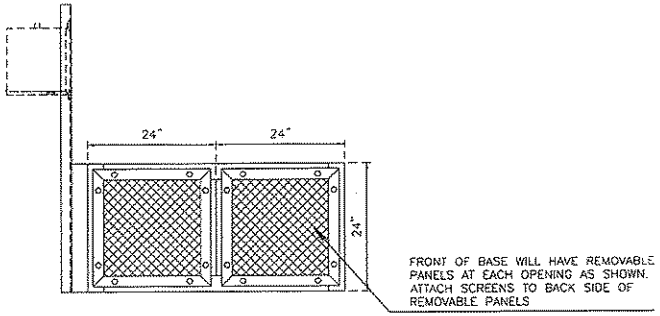

FRONT VIEW

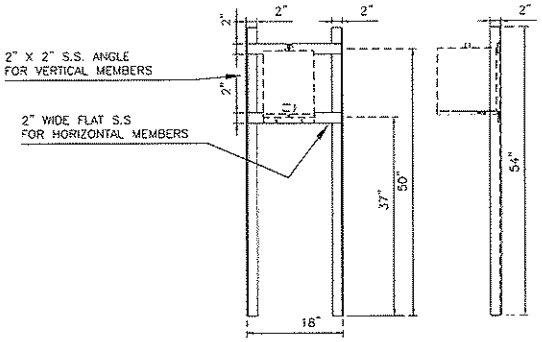

RACK DETAILS

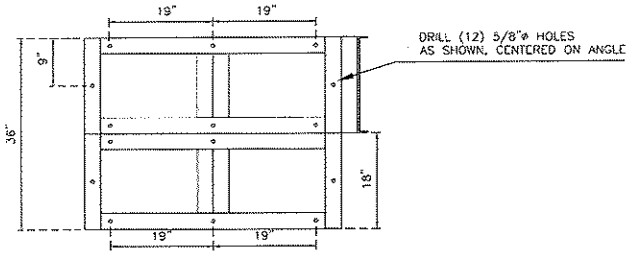

BOTTOM VIEW

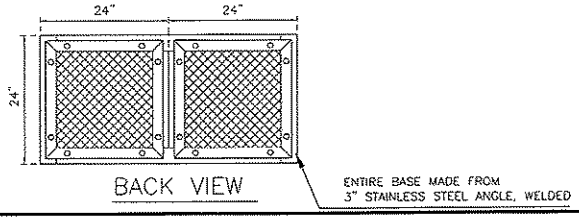

BACK VIEW

REVISIONS	BY

IMPROVEMENTS TO WASTEWATER COLLECTION SYSTEM

LIFT STATION CONSTRUCTION DETAILS

ELECTRICAL STANDARDS

FINAL SUBMITTAL

ECUA
EMERALD COAST UTILITIES AUTHORITY

APPROVED BY:

Drawn:	
Designed:	
Checked:	
Date:	MAY '13
Scale:	
Project No:	
Sheet No.	14A
	OF 18 Sheets

ALL WORK SHALL BE CONSTRUCTED IN ACCORDANCE WITH THE LATEST EDITION OF THE E.C.U.A. STANDARD SPECIFICATIONS

REVISIONS	BY

Power Panel Fuse Schedule

Fuse	Type	Voltage	Amps	Description
F1	KTK-R-1	600	1A	Phase Monitor A Phase
F2	KTK-R-1	600	1A	Phase Monitor B Phase
F3	KTK-R-1	600	1A	Phase Monitor C Phase
F10	AGC-3	250	3A	Power Supply 1 Primary
F11	AGC-3	250	3A	Power Supply 2 Primary

Pump 1 Panel Fuse Schedule

Fuse	Type	Voltage	Amps	Description
F4	FNQ-R-3-1/2	600	3-1/2A	Pump 1 CPT Phase A
F5	FNQ-R-3-1/2	600	3-1/2A	Pump 1 CPT Phase C
F6	FNQ-10	500	10A	Pump 1 CPT Secondary
F32	AGC-6	250	6A	RVSS Control Power

Pump 2 Panel Fuse Schedule

Fuse	Type	Voltage	Amps	Description
F7	FNQ-R-3-1/2	600	3-1/2A	Pump 2 CPT Phase A
F8	FNQ-R-3-1/2	600	3-1/2A	Pump 2 CPT Phase C
F9	FNQ-10	500	10A	Pump 2 CPT Secondary
F33	AGC-6	250	6A	RVSS Control Power

Control Panel Fuse Schedule

Fuse	Type	Voltage	Amps	Description
F12	AGC-10	250	10A	Power Supply 1 Secondary
F13	AGC-10	250	10A	Power Supply 2 Secondary
F14	AGC-10	250	10A	Control Power
F15	AGC-10	250	10A	Batteries
F16	AGC-2	250	2A	Radio Power Supply Primary
F17	AGC-2	250	2A	Radio Power Supply Secondary
F18	AGC-1/4	250	1/4A	Pump 1 Moter Thermal
F19	AGC-1/4	250	1/4A	Pump 2 Moter Thermal
F20	AGC-1/10	250	1/10A	Operator Interface
F21	AGC-1	250	1A	Digital Inputs 0.0-1.4
F22	AGC-1	250	1A	Digital Inputs 1.5-2.7
F23	AGC-2	250	2A	Digital Outputs 0.0-0.7
F24	AGC-2	250	2A	Digital Outputs 1.0-1.7
F25	AGC-1-1/2	250	1-1/2A	PLC Power
F26	AGC-3/4	250	3/4A	Process Transmitter Supply
F27	AGC-1/10	250	1/10A	Analog Inputs
F28	AGC-1/10	250	1/10A	Analog Outputs
F29	GMA-1/4	250	1/4A	Analog Input 2
F30	GMA-1/4	250	1/4A	Analog Input 3
F31	GMA-1/4	250	1/4A	Analog Input 4

HMI BUTTON LEGEND

F1	FAULT RESET/ENABLE INTRUSION
SHIFT+F1	DISABLE INTRUSION
F2	ALTERNATE PUMP ASSIGNMENTS
F3	RESET PUMP 1 RUNTIME
SHIFT+F3	RESET PUMP 2 RUNTIME
F4	ALARMS SCREEN
F5	OVERVIEW SCREEN
F6	PUMP 1 SCREEN
F7	PUMP 2 SCREEN
F8	SETPOINTS SCREEN

CONTROL PANEL ISA INFORMATION TAGS

THIS AREA IN ISOLATED FOR INTRINSICALLY SAFE CIRCUITS AND DEVICES ONLY. THIS AREA INCLUDES THE AIR SPACE BETWEEN THE BACKPANEL AND THE ENCLOSURE WALLS AND DOOR INCLUDING THE BOTTOM OF THE ENCLOSURE. ONLY INTRINSICALLY SAFE DEVICES AND WIRING ARE ALLOWED IN THIS AREA. DO NOT ROUTE NON-INTRINSICALLY SAFE WIRES THROUGH THE AREA OF ENCLOSURE.

WARNING

SUBSTITUTION OF COMPONENTS MAY IMPAIR INTRINSIC SAFETY

CONTROL PANEL EXTERIOR TAG INFORMATION

WARNING

TO PREVENT IGNITION OF FLAMMABLE OR COMBUSTIBLE ATMOSPHERES, DISCONNECT POWER BEFORE SERVICING

PROVIDES INTRINSICALLY SAFE CIRCUITS FOR USE IN CLASS I, GROUPS A, B, C, AND D WHEN CONNECTED TO PLC RELEVANT DRAWINGS ON FAIL NA/NI CAB FAULT

CONTROL PANEL DEVICE TAG INFORMATION

SECURELY FASTEN ALL INTERIOR DOOR LATCHES BEFORE CLOSING OUTER DOOR. FAILURE TO DO SO MAY HOT PLUGGING COULD CAUSE THE OUTER DOOR TO JAM WHEN RE-OPENED

Nameplate Data

Total Load (FLA)	73	99	127	155	181
Motor Hp	20	30	40	50	60
Motor FLA	27	40	52	65	77

Torque Rating Table

Component	Horsepower 20	30	40	50	60
Incoming Distribution Block (PDB1)	120lb-in/13.5N-m	275lb-in/31.0N-m	275lb-in/31.0N-m	275lb-in/31.0N-m	275lb-in/31.0N-m
Main Ground Block	35lb-in/3.9N-m	35lb-in/3.9N-m	35lb-in/3.9N-m	35lb-in/3.9N-m	35lb-in/3.9N-m
Motor Distribution Block (PDB2 & 3)	40lb-in/4.5N-m	120lb-in/13.5N-m	120lb-in/13.5N-m	120lb-in/13.5N-m	120lb-in/13.5N-m
Motor Ground Block	35lb-in/4.0N-m	45lb-in/5.1N-m	45lb-in/5.1N-m	45lb-in/5.1N-m	45lb-in/5.1N-m

IMPROVEMENTS TO WASTEWATER COLLECTION SYSTEM

LIFT STATION CONSTRUCTION DETAILS

ELECTRICAL STANDARDS

FINAL SUBMITTAL

EMERALD COAST UTILITIES AUTHORITY

APPROVED BY:

Drawn:
Designed:
Checked:
Date: MAY '13
Scale:
Project No:
Sheet No. 15
Of 18 Sheets

ALL WORK SHALL BE CONSTRUCTED IN ACCORDANCE WITH THE LATEST EDITION OF THE E.C.U.A. STANDARD SPECIFICATIONS

REVISIONS	BY

HAZARDOUS (CLASSIFIED) LOCATION

CLASS I, ZONE 0 OR 1, GROUPS IIC, IIB, IIA or
CLASS I, DIVISION 1, GROUPS A,B,C,D
CLASS II, DIVISION 1, GROUPS E,F,G
CLASS III, DIVISION 1

NON-HAZARDOUS LOCATION

CLASS I, ZONE 2, GROUPS IIC, IIB, IIA or
CLASS I, DIVISION 2, GROUPS A,B,C,D

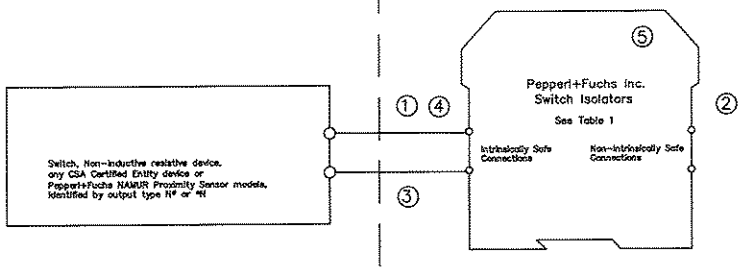

Notes:

① The intrinsically safe wiring must be installed in accordance with the Canadian Electrical Code CSA C22.1, Part 1, Appendix F.

② Barriers listed in Table 1 shall not be connected to any device that uses or generates in excess of 250Vrms or DC unless it has been determined that the voltage is adequately isolated from the barrier. Barriers listed in Table 2 shall not be connected to any device that uses or generates in excess of 60Vrms or DC unless the voltage is limited by an adequate means.

③ Any combination of up to 10 channels of the barriers listed in Table 1 or Table 2 may be connected in parallel and connected to a switch in a hazardous location.

④ The Entity concept allows interconnection of intrinsically safe apparatus with associated apparatus not specifically examined in combination as a system when the approved values of Voc and Isc for the associated apparatus are less than or equal to Vmax and Imax for the intrinsically safe apparatus and the approved values of Ca and La for the associated apparatus are greater than Ci + Ccable and Li + Lcable, respectively, for the intrinsically safe apparatus.

⑤ The following models with part number greater than 100000 are approved for mounting in a Class I, Zone 2, Groups IIC,IIB,IIA or Class I, Division 2, Groups A,B,C,D hazardous (classified) location: KF**-SR2-EX1.W, KF**-SR2-EX1.W.LB, KF**-SR2-EX2.W, KFD2-SR2-EX2.2S, KFD2-ST2-EX1.*, KFD2-ST2-EX2.*, KFD2-SOT2-EX1.*, KFD2-SOT2-EX2.*.

WARNING: Substitution of components may impair intrinsic safety and/or suitability for use in Class I, Division 2, Groups A,B,C,D or Class I, Zone 2, Groups IIC,IIB,IIA.
ADVERTISSEMENT: La substitution de composants peut compromettre la sécurité intrinsèque.

No changes without prior permission
CSA

THIS DRAWING CONTAINS PROPRIETARY DATA. NO DISCLOSURE, REPRODUCTION, OR USE OF ANY PART MAY BE MADE EXCEPT BY WRITTEN PERMISSION.

Title Installation Drawing for CSA Certified Switch Isolators

Revisions				ECO No.			
2-20-2008					Pepperl+Fuchs® Inc. Twinsburg, OH 44087-2202	Repl.No. -	Draw. No. 116-0047j	Sh. 1 of 2
In.	Date	Cons.	Resp.	Appr.				

TABLE 1: Barriers Certified to CSA Standard C22.2 No. 157 (Um = 250 V)

Model Numbers	Terminals	SYSTEM		ENTITY							
		V_{max}(V)	Res. (Ω)	V_{oc} (V)	I_{sc}(mA)	C_a(uF) GRPS			L_a(mH) GRPS		
						A,B	C,E	D,F,G	A,B	C,E	D,F,G
KFD2-SOT-Ex1*,KFD2-SOT-Ex2* KFD2-SR-Ex1*,KFD2--SR--Ex2* KFD2-SRT-Ex1* KFD2-ST-Ex1*,KFD2--ST--Ex2* KFA5--SR2-Ex1*,KFA5_SR2-Ex2* KFA6--SR2--Ex1*,KFA6--SR2-Ex2* KFD2--SR2--Ex1*,KFD2-SR2-Ex2*	1-3, 2-3; 4-6, 5-6	12.6	650	12.9	19.8	1.273	3.820	10.18	84.88	298.7	744.4
KFA5-SOT2-Ex1*,KFA5-SOT2-Ex2* KFA6-SOT2-Ex1*,KFA6-SOT2-Ex2*	1-3, 2-3; 4-6, 5-6	10.5	811	10.5	13.0	2.66	7.9	21.3	192	671	1000

TABLE 2: Barriers Certified to CSA Standard E79-11 (Um = 60 V)

Model Numbers	Terminals	Load Parameters							
		U_o (V_{oc})	I_o (I_{sc})	C_o(uF) GRPS			L_o(mH) GRPS		
				IIC (A,B)	IIB (C,E)	IIA (D,F,G)	IIC (A,B)	IIB (C,E)	IIA (D,F,G)
KFD2-SOT2-Ex1*,KFD2-SOT2-Ex2* KFD2-ST2-Ex1*,KFD2-ST2-Ex2*	1-3, 2-3; 4-6, 5-6	10.5	13.0	2.66	7.9	21.3	192	671	1000

No changes without prior permission
CSA

THIS DRAWING CONTAINS PROPRIETARY DATA. NO DISCLOSURE, REPRODUCTION, OR USE OF ANY PART MAY BE MADE EXCEPT BY WRITTEN PERMISSION.

Title Installation Drawing for CSA Certified Switch Isolators

Revisions				ECO No.			
2-20-2008					Pepperl+Fuchs® Inc. Twinsburg, OH 44087-2202	Repl.No. -	Draw. No. 116-0047j	Sh. 2 of 2
In.	Date	Cons.	Resp.	Appr.				

IMPROVEMENTS TO WASTEWATER COLLECTION SYSTEM
LIFT STATION CONSTRUCTION DETAILS
ELECTRICAL STANDARDS
FINAL SUBMITTAL

EMERALD COAST UTILITIES AUTHORITY

APPROVED BY:

Drawn:	
Designed:	
Checked:	
Date:	MAY '13
Scale:	
Project No:	
Sheet No.	16
	Of 18 Sheets

GENERAL ELECTRICAL NOTES

NEW WORK:

1. ENTIRE ELECTRICAL INSTALLATION SHALL BE IN ACCORDANCE WITH THE LATEST EDITION (UNLESS NOTED OTHERWISE) OF THE FOLLOWING CODES AND STANDARDS:
   1.1. NATIONAL ELECTRICAL CODE (NFPA 70).
   1.2. STANDARD FOR FIRE PROTECTION IN WASTEWATER TREATMENT AND COLLECTION FACILITIES (NFPA 820).
2. THE CONTRACTOR SHALL BE RESPONSIBLE FOR READING ALL PROJECT SPECIFICATIONS AND WILL BE RESPONSIBLE FOR MEETING ALL REQUIREMENTS OUTLINED IN THE SPECIFICATIONS.
3. CONTRACTOR SHALL COORDINATE ALL WORK WITH OTHER TRADES PRIOR TO ROUGH-IN AND INSTALLATION.
4. WORKING SPACE FOR ALL ELECTRICAL AND CONTROL EQUIPMENT OPERATING AT 600V VOLTS OR LESS TO GROUND AND LIKELY TO REQUIRE EXAMINATION, ADJUSTMENT, SERVICING, OR MAINTENANCE WHILE ENERGIZED SHALL COMPLY WITH NEC, ARTICLE 110.26.
5. THE ELECTRICAL DESIGN PROVIDES A NUMBER OF BRANCH CIRCUITS, AMPACITY AND OVERCURRENT PROTECTION FOR OTHER DIVISIONS DESIGN BASIS EQUIPMENT CONFORMING TO MANUFACTURER'S SPECIFICATIONS AVAILABLE AT TIME OF DESIGN. THE CONTRACTOR SHALL VERIFY ALL EQUIPMENT LOADS PRIOR TO ROUGH-IN. IF REQUIREMENTS OF EQUIPMENT ACTUALLY PROVIDED UNDER CONTRACT FOR CONSTRUCTION ARE DIFFERENT, CONTRACTOR SHALL MAKE ALL CHANGES NECESSARY WITHOUT INCREASE IN THE CONTRACT AMOUNT. SUCH CHANGES SHALL BE BASED UPON REQUIREMENTS, NAMEPLATE VALUES AND CODE REQUIREMENTS, WHICHEVER IS MORE STRINGENT, AND MAY INCLUDE, BUT ARE NOT LIMITED TO: SIZE OF CONDUCTORS, SIZE OF CONDUIT, QUANTITY OF CONDUCTORS AND CONDUITS, TYPE AND SIZE OF CIRCUIT BREAKER OR DISCONNECT, OVERLOADS, FULL-VOLTAGE STARTERS, REDUCED VOLTAGE SOFT STARTERS, VARIABLE FREQUENCY DRIVES, AND FUSE PROTECTION.
6. THE ELECTRICAL CONTRACTOR IS REQUIRED TO COORDINATE, PROVIDE, AND INSTALL A FULLY OPERATIONAL AND CODE COMPLIANT ELECTRICAL SYSTEM. THIS MAY INCLUDE THE ADDITION OF ELECTRICAL ITEMS NOT SHOWN ON THE ELECTRICAL PLANS, BUT REQUIRED FOR SYSTEM OPERATION.
7. CONTRACTOR SHALL COORDINATE INSTALLATION OF ELECTRICAL SERVICE WITH ELECTRICAL UTILITY COMPANY PROVIDING ELECTRICAL SERVICE TO FACILITY. CONTRACTOR SHALL PAY ALL FEES ASSESSED BY ELECTRICAL UTILITY COMPANY TO PROVIDE ELECTRICAL SERVICE TO FACILITY.
8. CONTRACTOR SHALL EXCAVATE AND CONDUCT DEMOLITION SO AS TO AVOID DAMAGE TO EXISTING UTILITIES AND OTHER UNDERGROUND OR CONCEALED ITEMS. IF EXISTING OR NEW ITEMS ARE DAMAGED, THE CONTRACTOR SHALL NOTIFY THE OWNER AT ONCE OF ALL DAMAGE AND SHALL REPAIR (OR REPLACE IF NECESSARY) TO THE ORIGINAL CONDITION TO THE SATISFACTION OF OWNER AND ENGINEER AT NO CHARGE IN THE CONTRACT AMOUNT.
9. THE CONTRACTOR SHALL BE RESPONSIBLE FOR PROVIDING DETAILED ELECTRICAL AND CONTROL EQUIPMENT LAYOUT DRAWINGS TO THE ENGINEER AND OWNER FOR APPROVAL PRIOR TO INSTALLATION.
10. ALL CONDUITS NOT LOCATED UNDER SLAB SHALL HAVE A MINIMUM BURIAL DEPTH OF 42", UNLESS NOTED OTHERWISE.
11. CONDUITS SHALL BE BURIED 42" (MINIMUM) BELOW GRADE WITH MARKER TAPE 6" ABOVE TOP OF CONDUIT, UNLESS NOTED OTHERWISE.
12. MINIMUM SIZE CONDUIT SHALL BE 1" (UNLESS NOTED OTHERWISE).
13. CONDUIT ROUTINGS AND DEVICE/EQUIPMENT LOCATIONS SHOWN ARE DIAGRAMMATIC ONLY. CONTRACTOR SHALL FIELD ROUTE AND LOCATE AS REQUIRED.
14. CONTRACTOR SHALL PROVIDE PULL BOXES IN POWER CIRCUIT CONDUIT AS REQUIRED TO LIMIT THE NUMBER OF BENDS TO A MAXIMUM OF 270° OR THREE 90° BENDS.
15. ALL WIRE SHALL BE COPPER.
16. ALL ELECTRICAL CIRCUITS SHALL INCLUDE A GREEN GROUNDING CONDUCTOR SIZED PER NEC.
17. CONDUCTORS SHALL BE TERMINATED ON TERMINAL BLOCKS.
18. THE CONTRACTOR SHALL TAG ALL POWER AND CONTROL SYSTEM CABLING AT ALL TERMINATION POINTS.
19. FINAL CONNECTION TO ALL EQUIPMENT IS SHOWN DIAGRAMMATIC. PROVIDE FINAL CONNECTION AS REQUIRED PER MANUFACTURER OF EQUIPMENT.
20. CONTRACTOR SHALL MAINTAIN A SET OF PRINTS AND MARK-UP DURING CONSTRUCTION TO REFLECT "AS-BUILT" CONDITIONS. PRINTS SHALL BE DELIVERED TO THE ENGINEER UPON COMPLETION OF THE PROJECT.
21. ALL HARDWARE SHALL BE STAINLESS STEEL.
22. ALUMINUM CONDUIT SHALL BE COATED WITH (2) WRAPS OF ANTI-CORROSION TAPE OR RUN THROUGH A SCHEDULE 80 PVC SLEEVE TO WHEN IN CONTACT WITH CONCRETE.
23. BARE COPPER SHALL BE COATED WITH (2) WRAPS OF ANTI-CORROSION TAPE OR RUN THROUGH A SCHEDULE 80 PVC SLEEVE TO WHEN IN CONTACT WITH CONCRETE.
24. ENGINEER OF RECORD SHALL BE RESPONSIBLE FOR FINAL SIZING OF ALL EQUIPMENT.

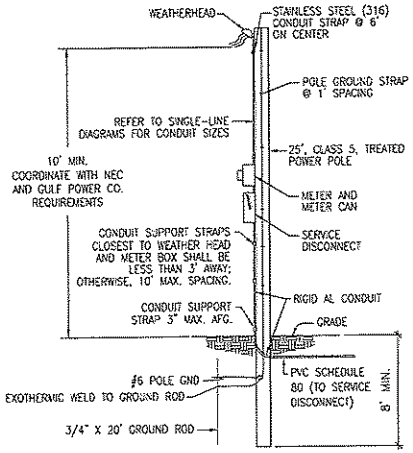

SERVICE LATERAL CONDUIT SHALL BE 3" (MIN) SCHEDULE 80 PVC BELOW GRADE AND 3" (MIN) RIGID AL CONDUIT ABOVE GRADE. ANY REQUIREMENTS BY THE UTILITY COMPANY SHALL PREVAIL OVER THE REQUIREMENTS OUTLINED HERE AND SHALL BE COORDINATED BY THE ELECTRICAL CONTRACTOR PRIOR TO INSTALLATION.

A3 UTILITY POLE DETAIL
NOT TO SCALE

ALL WORK SHALL BE CONSTRUCTED IN ACCORDANCE WITH THE LATEST EDITION OF THE E.C.U.A. STANDARD SPECIFICATIONS

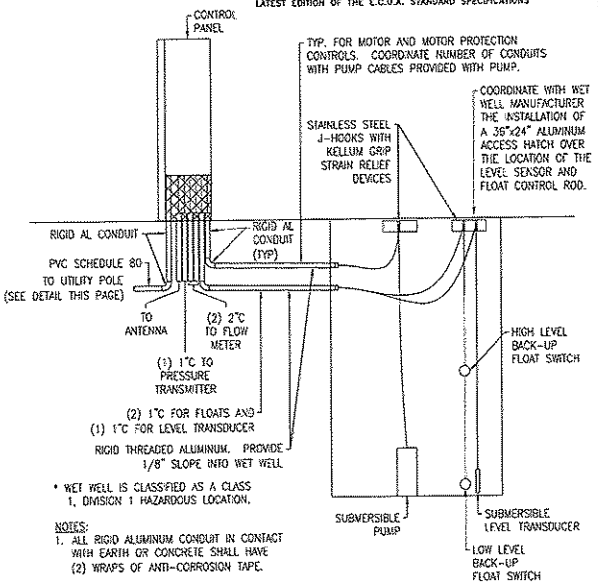

* WET WELL IS CLASSIFIED AS A CLASS 1, DIVISION 1 HAZARDOUS LOCATION.

NOTES:
1. ALL RIGID ALUMINUM CONDUIT IN CONTACT WITH EARTH OR CONCRETE SHALL HAVE (2) WRAPS OF ANTI-CORROSION TAPE.

B4 TYPICAL WET WELL SECTION DETAIL
NOT TO SCALE

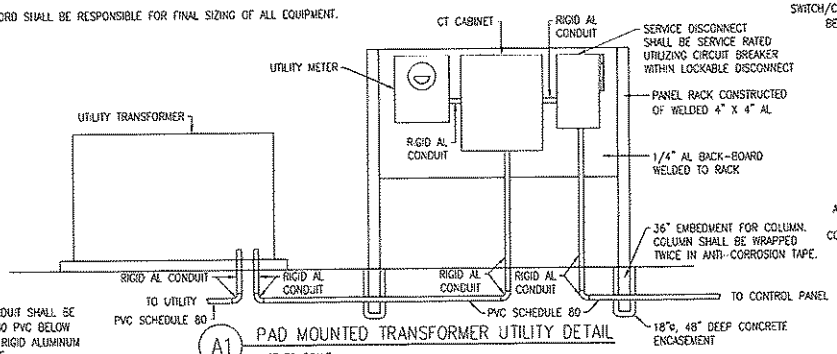

* SERVICE LATERAL CONDUIT SHALL BE 3" (MIN) SCHEDULE 80 PVC BELOW GRADE AND 3" (MIN) RIGID ALUMINUM CONDUIT ABOVE GRADE.

A1 PAD MOUNTED TRANSFORMER UTILITY DETAIL
NOT TO SCALE

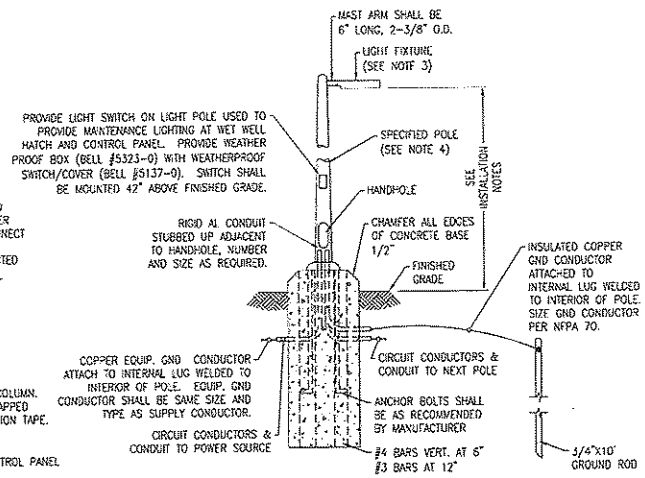

A4 LIGHT POLE INSTALLATION DETAIL
NOT TO SCALE

LIGHTING PERFORMANCE CRITERIA:
1. LIGHTING FIXTURE LAYOUT SHALL BE BASED UPON ACHIEVING 20 FOOT CANDLES (+/- 20%) AT THE FRONT OF THE CONTROL PANEL (WORK-PLANE OF 24" AFG) AND AT THE WET WELL ACCESS HATCH (WORKPLANE OF 0" AFG).
2. GENERAL SECURITY LIGHTING SHALL ENCOMPASS ACCESS GATE AND ALL PIPING/EQUIPMENT AT A MIN: AVERAGE 1 FOOT-CANDLE (+/- 20%, AT WORKPLANE OF 0" AFG).
3. REFER TO LIGHTING CONTROL DIAGRAM ON SHEET No. 18 FOR ADDITIONAL REQUIREMENTS.

LIGHT POLE INSTALLATION NOTES:
1. BURIAL AND DIAMETER DIMENSIONS INDICATED ARE FOR NOMINAL MINIMAL SIZES ONLY. FINAL DIMENSIONS SHALL BE DETERMINED BY A REGISTERED STRUCTURAL ENGINEER IN THE STATE OF FLORIDA BASED UPON FIXTURES PROVIDED. PROVIDE SIGNED, DATED, AND SEALED PLANS FOR EACH INSTALLATION TYPE AND FIXTURE TYPE AS PART OF LIGHTING SUBMITTAL PACKAGE.
2. THE POLE AND FOUNDATION DESIGN SHALL BE BY A DELEGATED PROFESSIONAL ENGINEER TO MEET THE FOLLOWING CRITERIA:
   2.1. DESIGN WIND SPEED 160 MPH WITH A 1.3 GUST FACTOR. EXPOSURE CATEGORY C.
   2.2. SIZE EMBEDMENT FOR A MAXIMUM PERMANENT POLE DEFLECTION AFTER DESIGN WIND SPEED EVENT OF 1.00".
   2.3. ALUMINUM, ROUND OR SQUARE, TAPERED.
3. FIXTURE SHALL BE AMERICAN ELECTRIC LIGHTING ATB2 FIXTURE, 40 LED, 1080mA DRIVER, 120V, TYPE 4, WITH PHOTOCONTROL.
4. REFER TO SPECIFICATIONS SECTION 16521 "EXTERIOR LIGHTING" FOR ADDITIONAL REQUIREMENTS.
5. LIGHT FIXTURES SHALL BE MOUNTED AT 15'-0" (MAXIMUM) ABOVE FINISHED GRADE.

REVISIONS	BY

IMPROVEMENTS TO WASTEWATER COLLECTION SYSTEM
LIFT STATION CONSTRUCTION DETAILS
ELECTRICAL STANDARDS
FINAL SUBMITTAL

EMERALD COAST UTILITIES AUTHORITY

APPROVED BY:

Drawn:
Designed:
Checked:
Date: MAY '13
Scale:
Project No:
Sheet No. 17
Of 18 Sheets

ALL WORK SHALL BE CONSTRUCTED IN ACCORDANCE WITH THE LATEST EDITION OF THE E.C.U.A. STANDARD SPECIFICATIONS

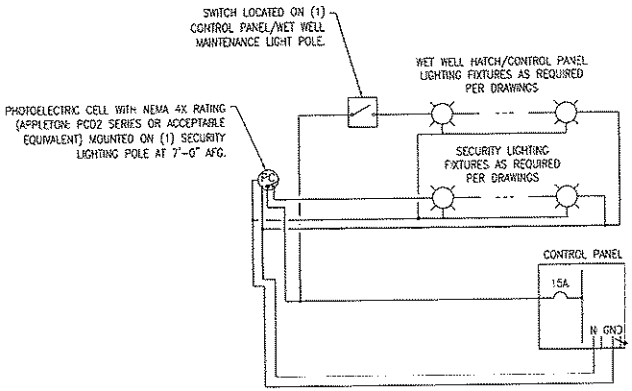

C2 TYPICAL LIGHTING CONTROL DIAGRAM

NOT TO SCALE

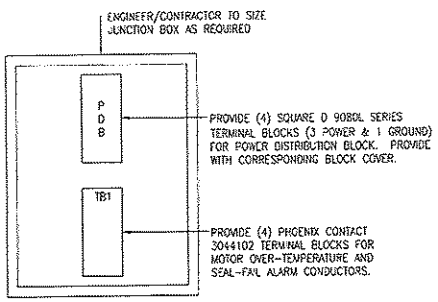

INTERIOR ELEVATION

DETAIL NOTES:

1. ALL TERMINAL BLOCKS SHALL BE PROVIDED WITH CORRESPONDING END BRACKETS AND END COVERS.
2. PROVIDE SEPARATE GROUND LUG IN EACH JUNCTION BOX, BONDED TO JUNCTION BOX.

A1 TYPICAL PUMP JUNCTION BOX ELEVATION

NOT TO SCALE

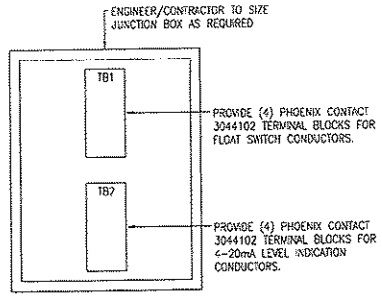

INTERIOR ELEVATION

DETAIL NOTES:

1. ALL TERMINAL BLOCKS SHALL BE PROVIDED WITH CORRESPONDING END BRACKETS AND END COVERS.
2. PROVIDE SEPARATE GROUND LUG IN EACH JUNCTION BOX, BONDED TO JUNCTION BOX.

A3 TYPICAL LEVEL INDICATION JUNCTION BOX ELEVATION

NOT TO SCALE

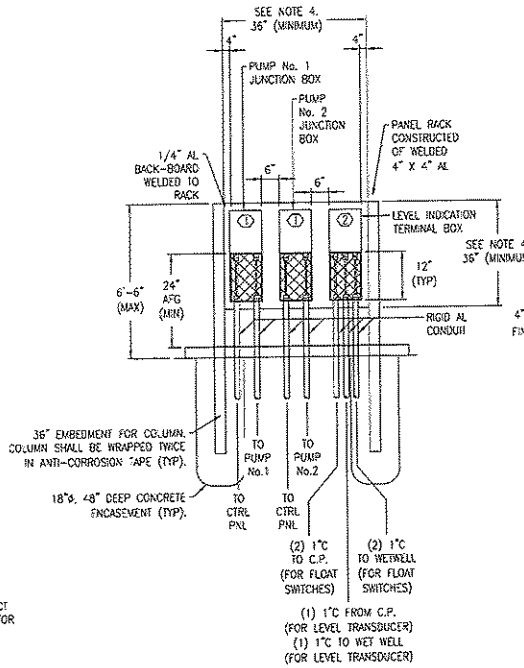

FRONT ELEVATION

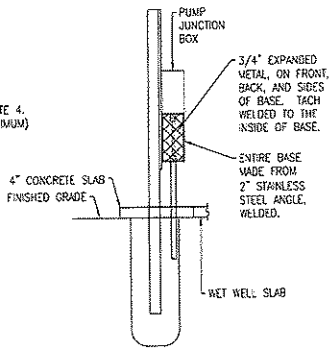

SIDE ELEVATION

DETAIL NOTES:

1. THIS DETAIL SHALL ONLY APPLY WHEN THE CONTROL PANEL CANNOT BE PLACED WITHIN 6'-0" OF THE WET WELL TO ALLOW FOR CONNECTION OF STANDARD 50 FOOT PUMP CABLE CONNECTIONS.
2. BACKBOARD SHALL BE PLACED AT THE EDGE OF THE WET WELL SLAB BETWEEN THE WET WELL AND CONTROL PANEL.
3. JUNCTION BOXES SHALL BE MOUNTED SUCH THAT THEY ARE FACING THE WET WELL.
4. ENGINEER/CONTRACTOR SHALL SIZE JUNCTION BOXES AND BACKBOARDS BASED UPON INSTALLATION REQUIREMENTS PROVIDED AT TIME OF DESIGN.

KEY NOTES

1. REFER TO "TYPICAL PUMP JUNCTION BOX ELEVATION" (THIS SHEET) FOR ADDITIONAL REQUIREMENTS.
2. REFER TO "TYPICAL LEVEL INDICATION JUNCTION BOX ELEVATION" (THIS SHEET) FOR ADDITIONAL REQUIREMENTS.

A4 TYPICAL PUMP JUNCTION BOXES

NOT TO SCALE

REVISIONS	BY

IMPROVEMENTS TO WASTEWATER COLLECTION SYSTEM

LIFT STATION CONSTRUCTION DETAILS

ELECTRICAL STANDARDS

FINAL SUBMITTAL

ECUA EMERALD COAST UTILITIES AUTHORITY

APPROVED BY:

Drawn:
Designed:
Checked:
Date: MAY '13
Scale:
Project No:
Sheet No. 18
OF 18 Sheets

ALL WORK SHALL BE CONSTRUCTED IN ACCORDANCE WITH THE LATEST EDITION OF THE E.C.U.A. STANDARD SPECIFICATIONS

480V 3ø 20HP – 60HP SOFT STARTER ELECTRICAL STANDARD

FOR

EMERALD COAST UTILITY AUTHORITY ESCAMBIA COUNTY, FL

SHEET NO.	SHEET DESCRIPTION
1	MAIN POWER DISTRIBUTION SCHEMATIC
2	CONTROL SCHEMATIC
3	DIGITAL INPUTS SCHEMATIC
4	DIGITAL OUTPUTS & ANALOG INPUTS SCHEMATIC
5	ANALOG OUTPUTS & STARTER CONTROL SCHEMATIC
6	TERMINAL BLOCK LAYOUT AND FIELD CONNECTIONS
7	LINEAR EXTERIOR PANEL LAYOUT & FIELD CONDUIT REQUIREMENTS
8	POWER & PUMP 1 INTERNAL PANEL LAYOUTS
9	PUMP 2 & CONTROL PANEL INTERNAL LAYOUTS
10	EQUIPMENT LIST
11	HORSEPOWER RELATED EQUIPMENT & POWER CONDUCTORS
12	PANEL TO PANEL CONDUCTORS & EQUIPMENT
13	PANEL TO PANEL WIRING
14	LINEAR STAINLESS STEEL FRAME LAYOUT
15	TABLES, LEGENDS & TAGS
16	ISR INSTRUCTIONS
17	GENERAL NOTES AND DETAILS
18	GENERAL NOTES AND DETAILS

REVISIONS	BY

IMPROVEMENTS TO WASTEWATER COLLECTION SYSTEM

LIFT STATION CONSTRUCTION DETAILS

ELECTRICAL STANDARDS

FINAL SUBMITTAL

ECUA

EMERALD COAST UTILITIES AUTHORITY

APPROVED BY:

Drawn:

Designed:

Checked:

Date: MAY '13

Scale:

Project No:

Sheet No. 0

Of 18 Sheets

ALL WORK SHALL BE CONSTRUCTED IN ACCORDANCE WITH THE LATEST EDITION OF THE E.C.U.A. STANDARD SPECIFICATIONS

VOLTS	PHASE	FREQ	FLA
480	3	60	XXX
LARGEST MOTOR			
VOLTS	PHASE	FREQ	FLA	HP
480	3	60	XXX	XX
SHORT CIRCUIT CURRENT: 10kA RMS SYMMETRICAL, 480VAC MAXIMUM			

*FOR NAMEPLATE DATA FOR EACH HORSEPOWER RATING SEE SHEET 15 'NAMEPLATE DATA' TABLE

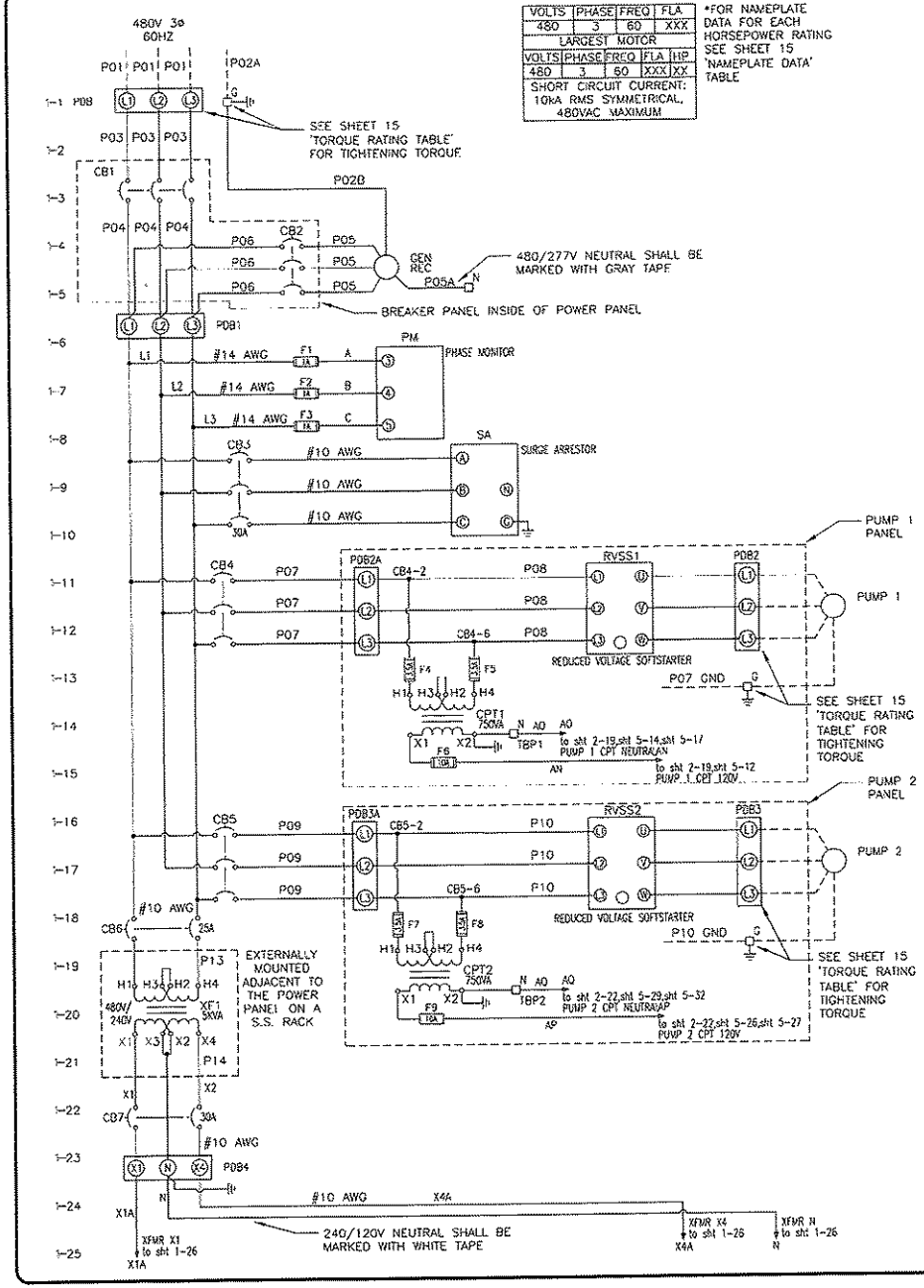

NOTES:

1. THE COMPLETED CONTROL PANEL SHALL BE LABELED AND MANUFACTURED TO MEET U.L. 508A AND 698A CERTIFICATION.
2. CONTROL PANEL WIRING SHALL BE STRANDED COPPER, MINIMUM SIZE #16 AWG WITH 600V 90DEGREE C TYPE THHN INSULATION.
3. CONTROL PANEL WIRING SHALL BE NUMBERED AT BOTH ENDS WITH TYPE WRITTEN, HEAT SHRINKABLE WIRE MARKERS.
4. ALL WIRING WITHIN THE CONTROL PANEL SHALL BE COLOR CODED OR CODED USING ELECTRICAL TAPE IN SIZES WHERE COLORED INSULATION IS NOT AVAILABLE. THE FOLLOWING CODING SHALL BE USED:
   - 4.1. UNGROUNDED AC CONDUCTORS AT SUPPLY VOLTAGE – BLACK
   - 4.2. GROUNDED AC CURRENT CARRYING CONDUCTORS – WHITE
   - 4.3. UNGROUNDED AC CONDUCTORS BELOW SUPPLY VOLTAGE – RED
   - 4.4. UNGROUNDED AC CONTROL CONDUCTORS & CONDUCTORS THAT REMAIN ENERGIZED WHEN THE MAIN DISCONNECT IS OFF – YELLOW
   - 4.5. UNGROUNDED DC CONTROL CONDUCTORS – ORANGE
   - 4.6. GROUNDED DC CURRENT CARRYING CONDUCTORS – BROWN
   - 4.7. INTRINSICALLY SAFE WIRING – BLUE
   - 4.8. GROUND CONDUCTORS – GREEN
5. SEE SHEETS 11 & 12 FOR DETAILS REGARDING ALL POWER CONDUCTORS LABELED PXX.
6. SEE SHEET 11 'HORSEPOWER RELATED COMPONENTS EQUIPMENT LIST' FOR RATINGS OF OVERCURRENT PROTECTION DEVICES.
7. SEE SHEET 6 FOR TERMINAL BLOCK DESIGNATIONS AND DESCRIPTIONS.

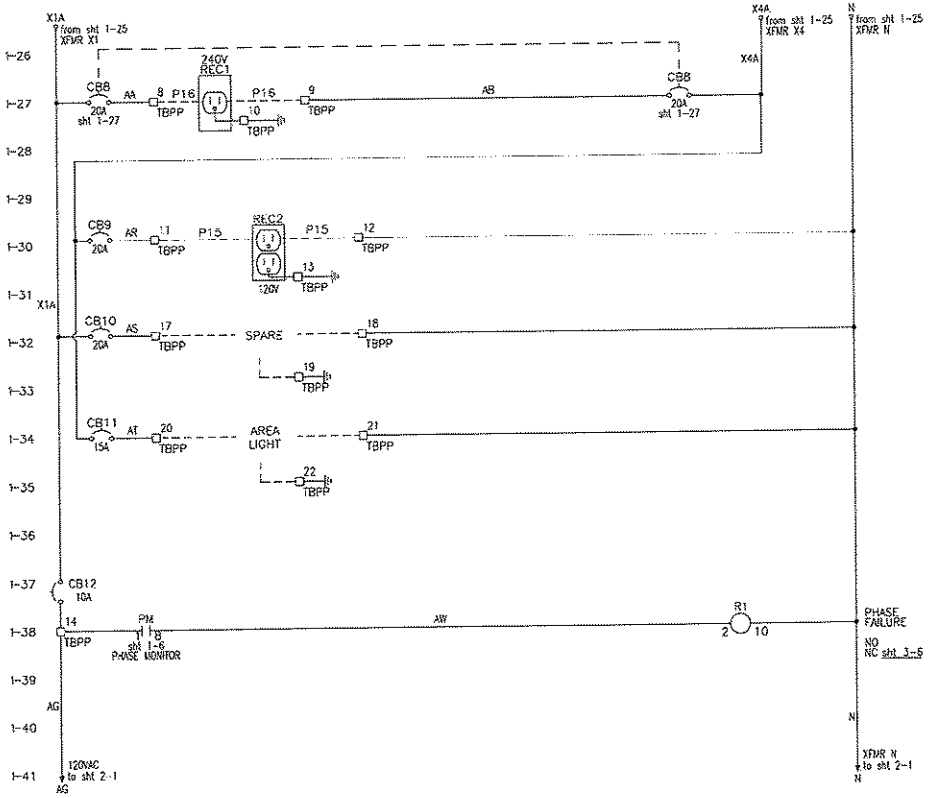

REVISIONS	BY

IMPROVEMENTS TO WASTEWATER COLLECTION SYSTEM

LIFT STATION CONSTRUCTION DETAILS

ELECTRICAL STANDARDS

FINAL SUBMITTAL

EMERALD COAST UTILITIES AUTHORITY

APPROVED BY:

Drawn:	
Designed:	
Checked:	
Date:	MAY '13
Scale:	
Project No:	
Sheet No.	1
	OF 18 Sheets

ALL WORK SHALL BE CONSTRUCTED IN ACCORDANCE WITH THE LATEST EDITION OF THE E.C.U.A. STANDARD SPECIFICATIONS

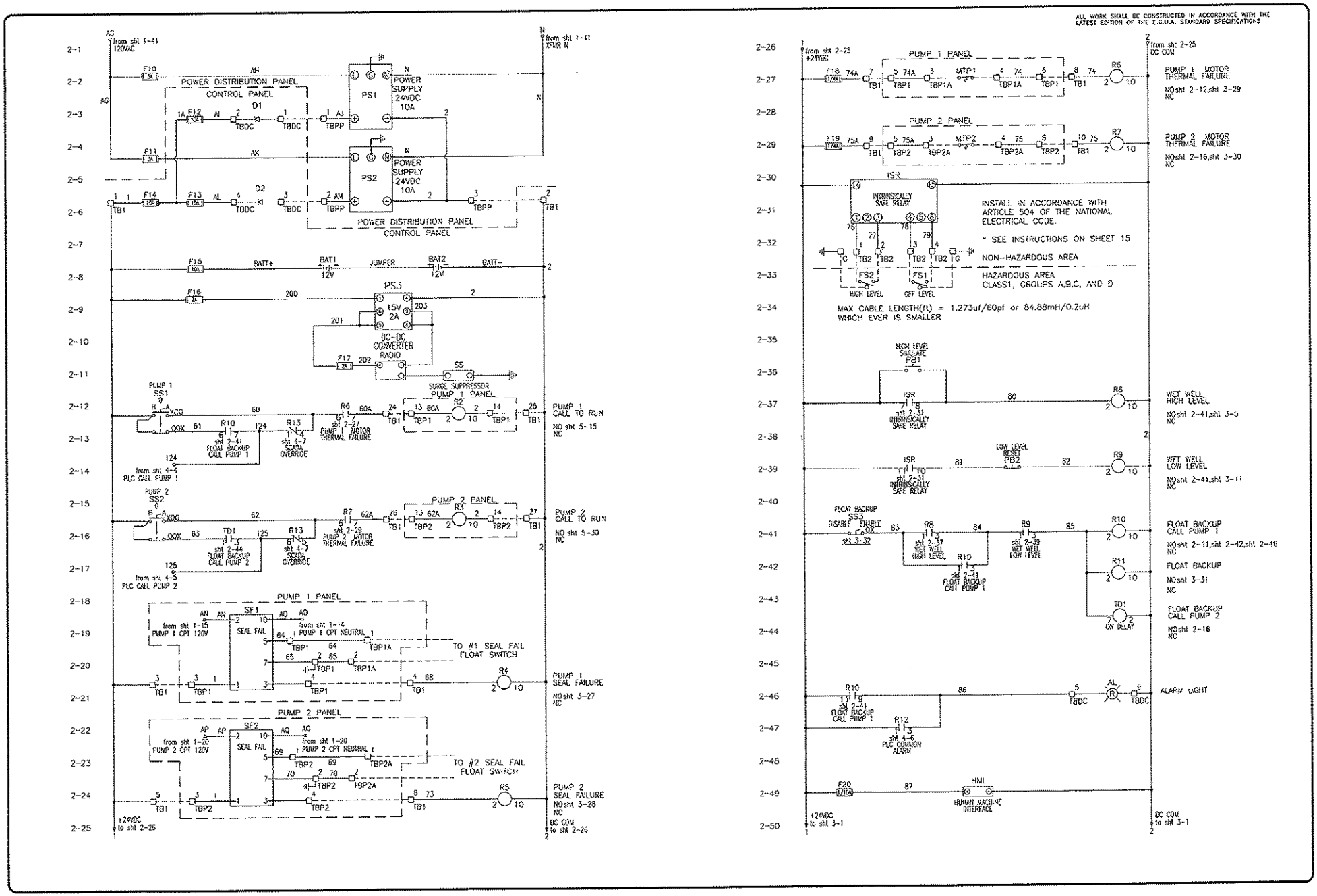

REVISIONS	BY

IMPROVEMENTS TO WASTEWATER COLLECTION SYSTEM

LIFT STATION CONSTRUCTION DETAILS

ELECTRICAL STANDARDS

FINAL SUBMITTAL

EMERALD COAST UTILITIES AUTHORITY

APPROVED BY:

Drawn:
Designed:
Checked:
Date: MAY '13
Scale:
Project No:
Sheet No. 2
OF 18 Sheets

ALL WORK SHALL BE CONSTRUCTED IN ACCORDANCE WITH THE LATEST EDITION OF THE E.C.U.A. STANDARD SPECIFICATIONS

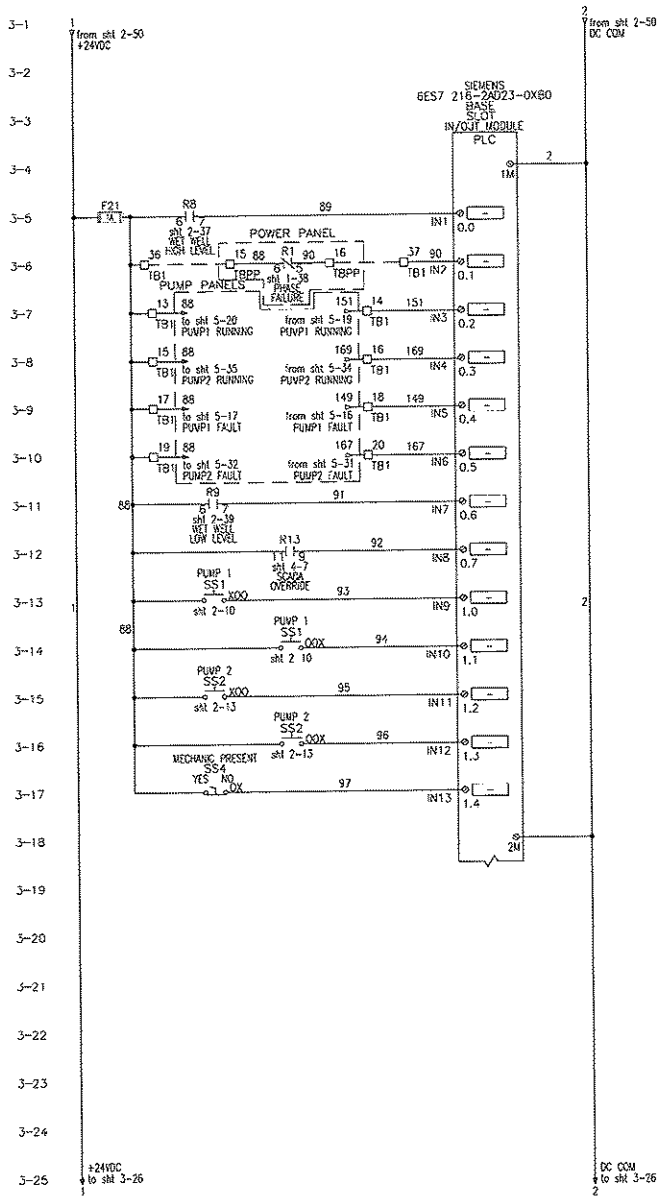

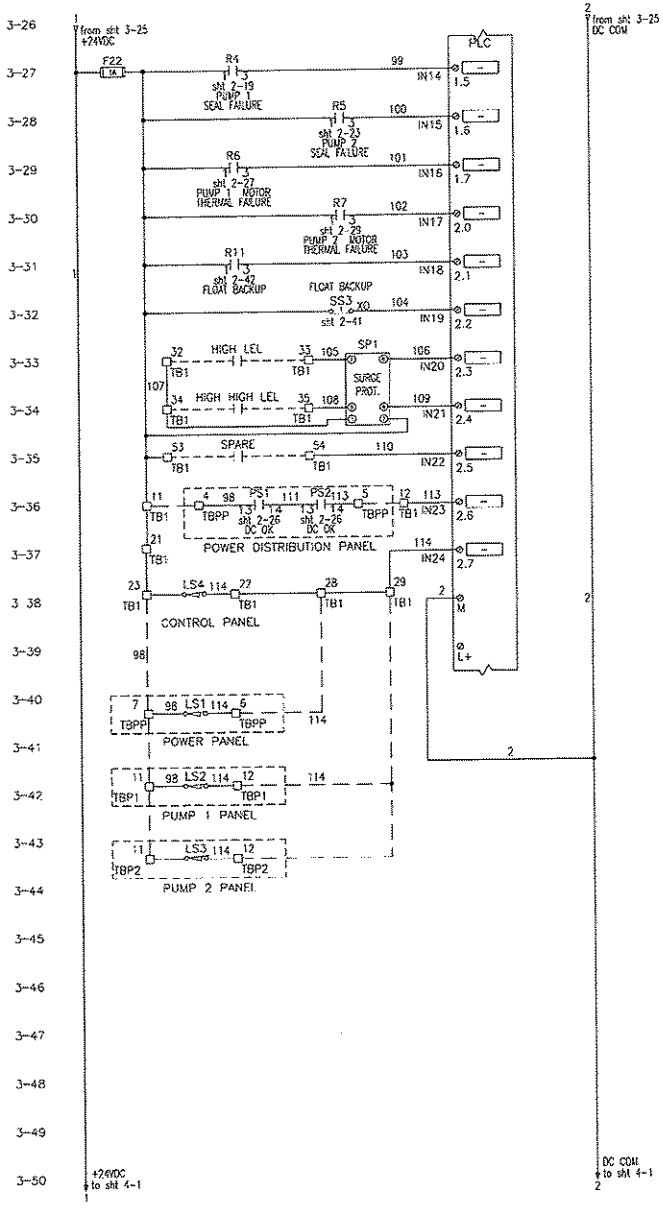

REVISIONS	BY

IMPROVEMENTS TO WASTEWATER COLLECTION SYSTEM

LIFT STATION CONSTRUCTION DETAILS

ELECTRICAL STANDARDS

FINAL SUBMITTAL

EMERALD COAST UTILITIES AUTHORITY

APPROVED BY:

Drawn:	
Designed:	
Checked:	
Date:	MAY '13
Scale:	
Project No:	
Sheet No.	3
	OF 18 Sheets

ALL WORK SHALL BE CONSTRUCTED IN ACCORDANCE WITH THE LATEST EDITION OF THE E.C.U.A. STANDARD SPECIFICATIONS

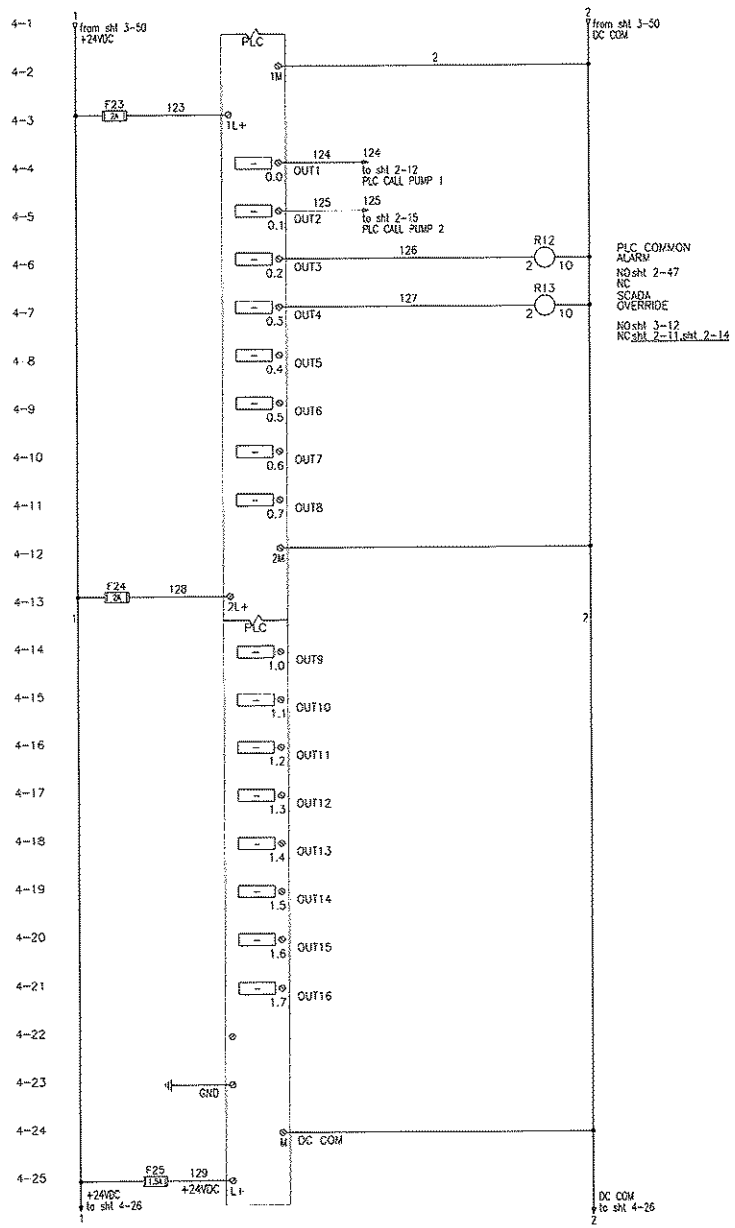

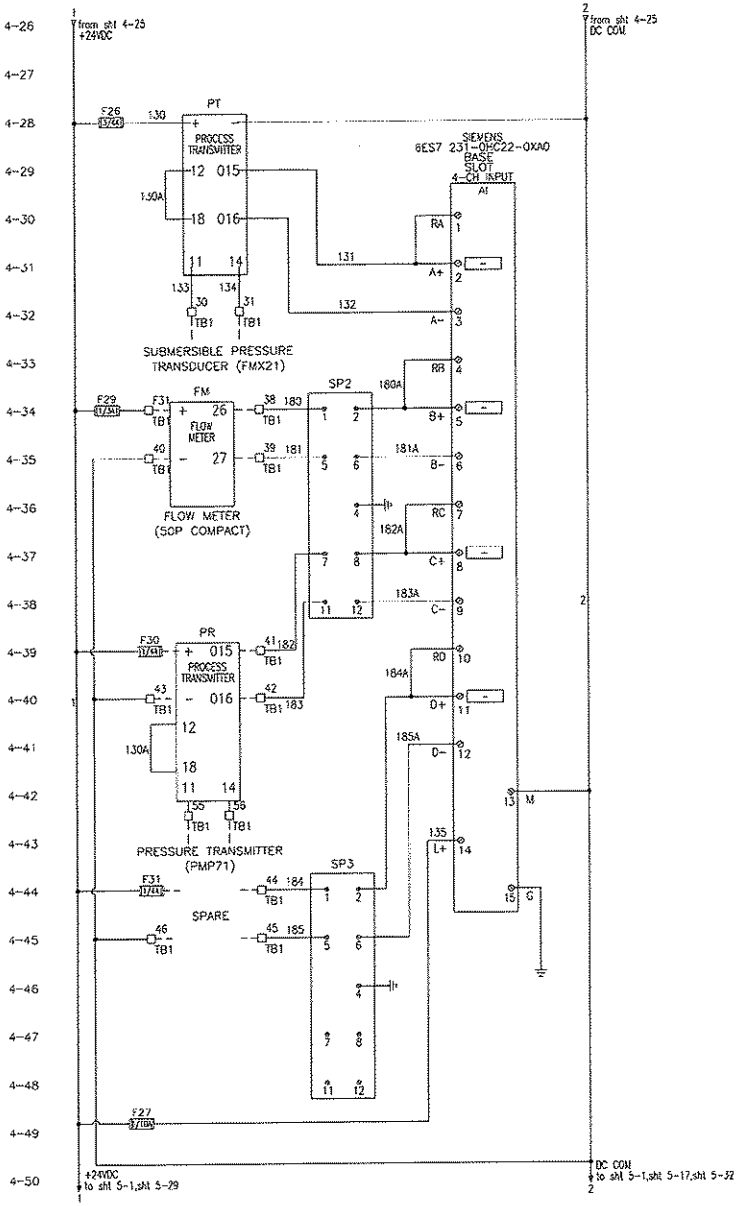

REVISIONS	BY

IMPROVEMENTS TO WASTEWATER COLLECTION SYSTEM

LIFT STATION CONSTRUCTION DETAILS

ELECTRICAL STANDARDS

FINAL SUBMITTAL

EMERALD COAST UTILITIES AUTHORITY

APPROVED BY:

Drawn:
Designed:
Checked:
Date: MAY '13
Scale:
Project No:
Sheet No. 4
OF 18 Sheets

ALL WORK SHALL BE CONSTRUCTED IN ACCORDANCE WITH THE LATEST EDITION OF THE E.C.U.A. STANDARD SPECIFICATIONS

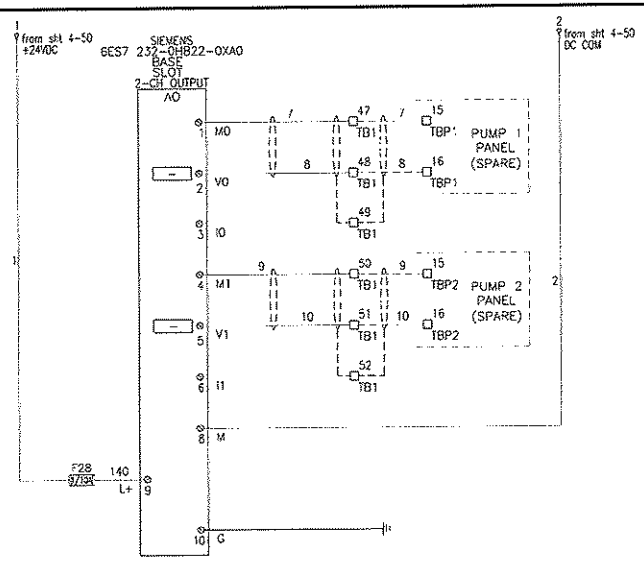

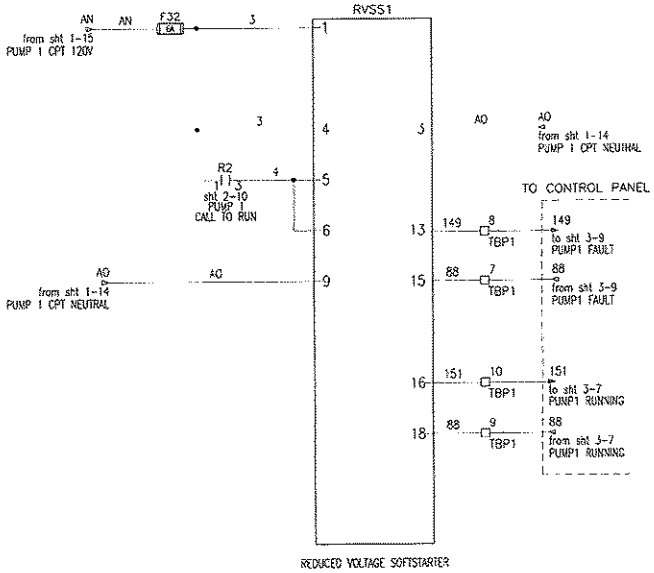

RVSS PARAMETERS
FAULT PARAMETERS -
FAULT RESET = YES

I/O PROGRAMMING PARAMETERS-
FAULT RELAY TYPE = FAILSAFE

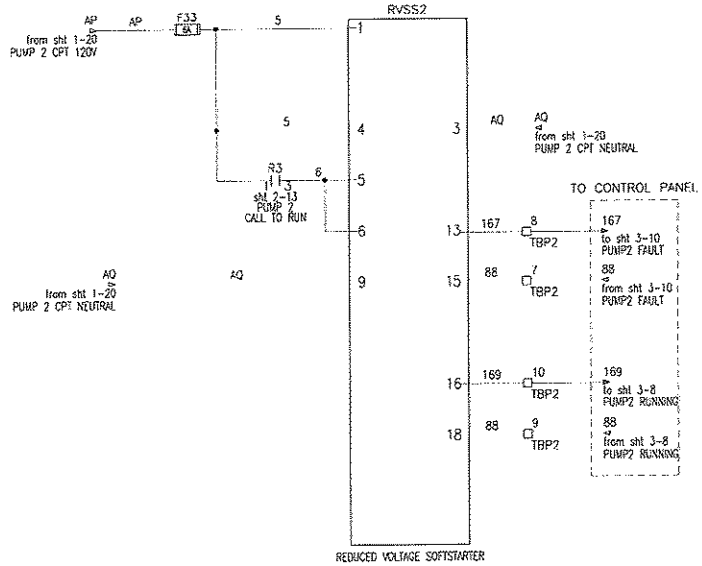

RVSS PARAMETERS
FAULT PARAMETERS -
FAULT RESET = YES

I/O PROGRAMMING PARAMETERS-
FAULT RELAY TYPE = FAILSAFE

REVISIONS	BY

IMPROVEMENTS TO WASTEWATER COLLECTION SYSTEM

LIFT STATION CONSTRUCTION DETAILS

ELECTRICAL STANDARDS

FINAL SUBMITTAL

EMERALD COAST UTILITIES AUTHORITY

APPROVED BY:

Drawn:	
Designed:	
Checked:	
Date:	MAY '13
Scale:	
Project No:	
Sheet No.	5
	OF 18 Sheets

ALL WORK SHALL BE CONSTRUCTED IN ACCORDANCE WITH THE LATEST EDITION OF THE E.C.U.A. STANDARD SPECIFICATIONS

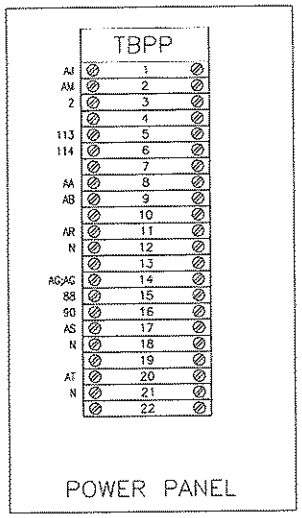

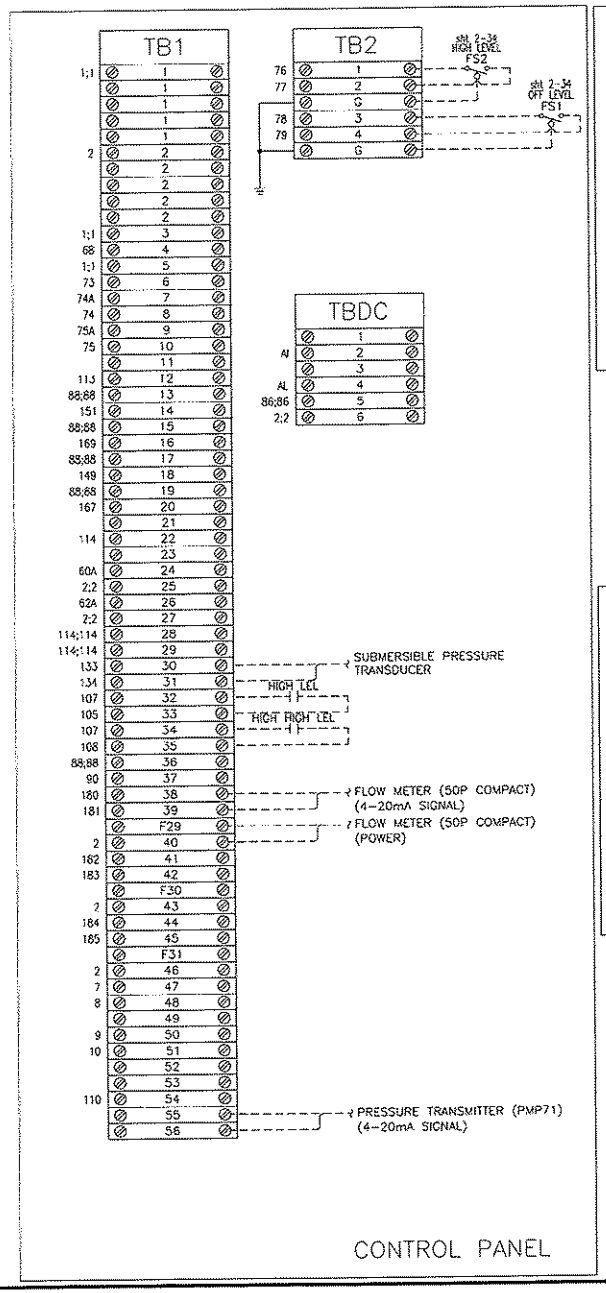

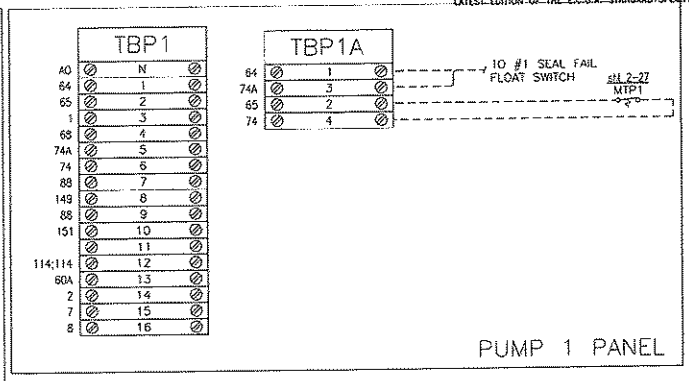

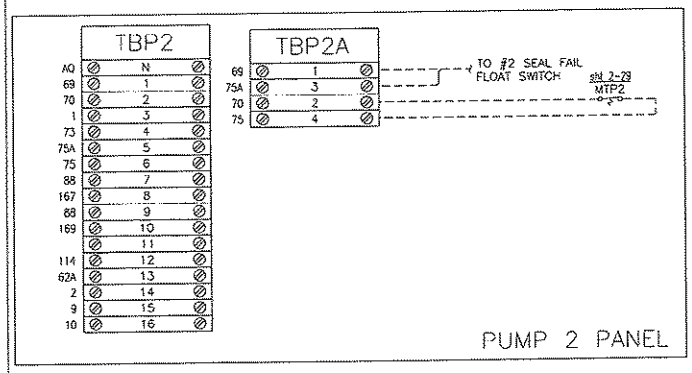

NOTES:

TERMINAL BLOCK DESIGNATIONS:

- TBPP – POWER PANEL TERMINAL BLOCK
- TB1 – CONTROL PANEL TERMINAL BLOCK
- TB2 – INTRINSICALLY SAFE TERMINAL BLOCK
- TBP1 – PUMP 1 TERMINAL BLOCK
- TBP1A – PUMP 1 TERMINAL BLOCK (MOTOR THERMAL AND SEAL FAILURE)
- TBP2 – PUMP 2 TERMINAL BLOCK
- TBP2A – PUMP 2 TERMINAL BLOCK (MOTOR THERMAL AND SEAL FAILURE)

TYPICAL FOR ALL TERMINAL BLOCKS ON THIS DRAWING

USE COPPER CONDUCTORS ONLY
75 DEG C (167 DEG F)
5.3–7.0 LB/IN TIGHTENING TORQUE

REVISIONS	BY

IMPROVEMENTS TO WASTEWATER COLLECTION SYSTEM

LIFT STATION CONSTRUCTION DETAILS

ELECTRICAL STANDARDS

FINAL SUBMITTAL

EMERALD COAST UTILITIES AUTHORITY

APPROVED BY:

Drawn:
Designed:
Checked:
Date: MAY '13
Scale:
Project No:
Sheet No. 6
OF 18 Sheets

ALL WORK SHALL BE CONSTRUCTED IN ACCORDANCE WITH THE LATEST EDITION OF THE E.C.U.A. STANDARD SPECIFICATIONS

NOTES

1. SEE SHEET 15 FOR SCHEDULES, LEGENDS AND PANEL TAGS.

ATTENTION

THIS LAYOUT IS ONE OF TWO (2) POSSIBLE CHOICES – SEE SHEET 7A FOR THE OTHER OPTION. IF THIS LAYOUT OPTION IS SELECTED, SEE SHEET 14 FOR ASSOCIATED RACK DETAILS.

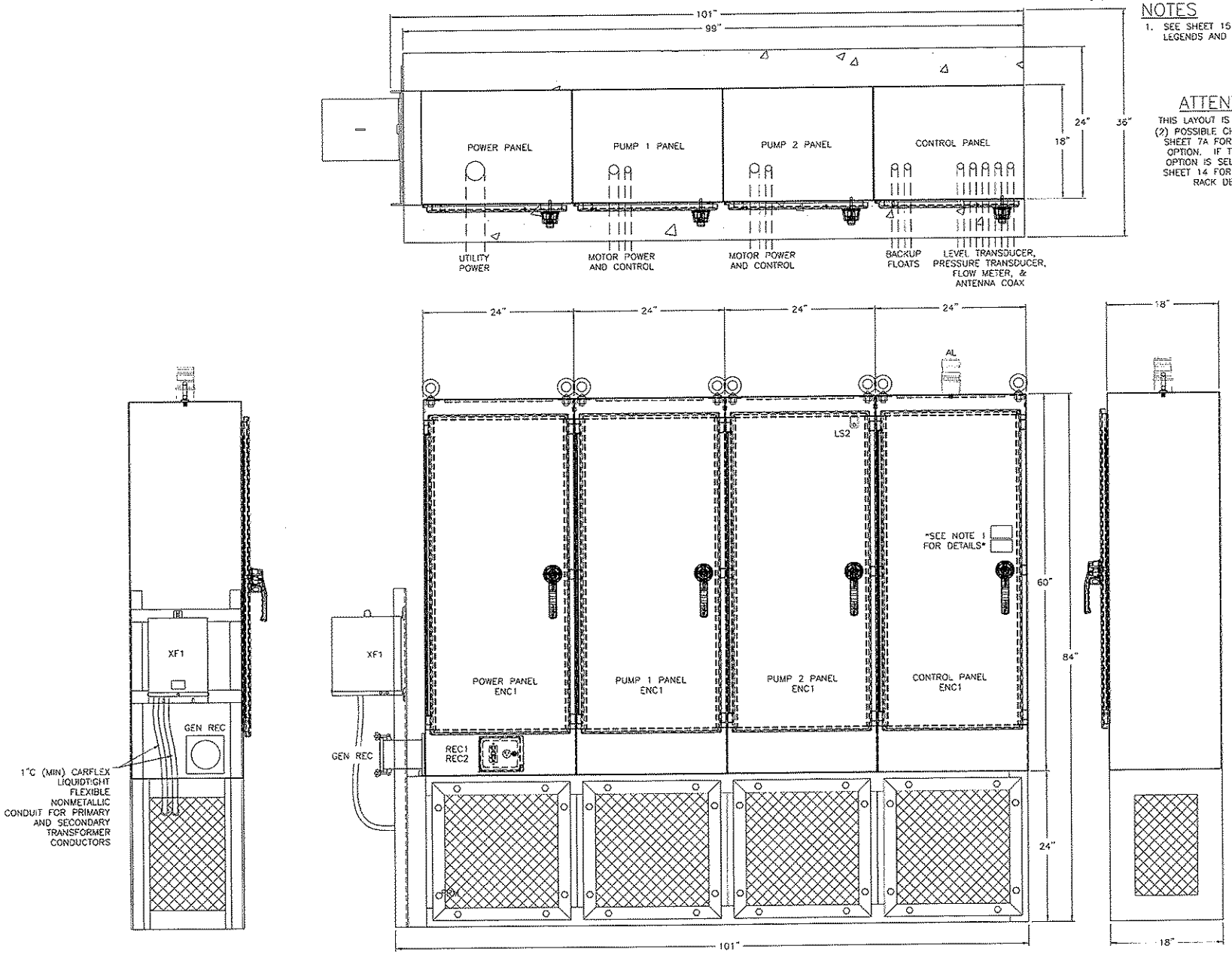

REVISIONS	BY

IMPROVEMENTS TO WASTEWATER COLLECTION SYSTEM

LIFT STATION CONSTRUCTION DETAILS

ELECTRICAL STANDARDS

FINAL SUBMITTAL

EMERALD COAST UTILITIES AUTHORITY

APPROVED BY:

Drawn:	
Designed:	
Checked:	
Date:	MAY '13
Scale:	
Project No:	
Sheet No:	7
	Of 18 Sheets

ALL WORK SHALL BE CONSTRUCTED IN ACCORDANCE WITH THE LATEST EDITION OF THE E.C.U.A. STANDARD SPECIFICATIONS

NOTES

1. SEE SHEET 15 FOR SCHEDULES, LEGENDS AND PANEL TAGS.
2. LAYOUT OF THE POWER & STARTER SECTIONS DEPICTS THE LARGEST POSSIBLE HORSEPOWER CONFIGURATION.

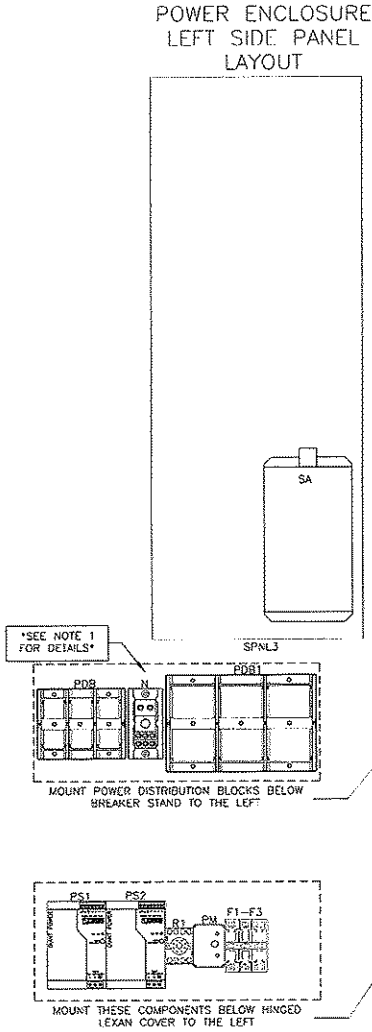

POWER ENCLOSURE LEFT SIDE PANEL LAYOUT

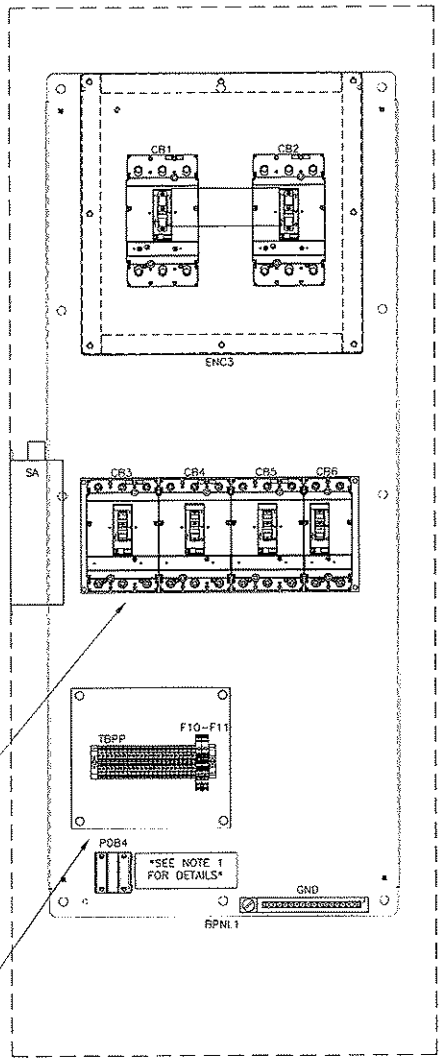

POWER ENCLOSURE BACKPANEL LAYOUT

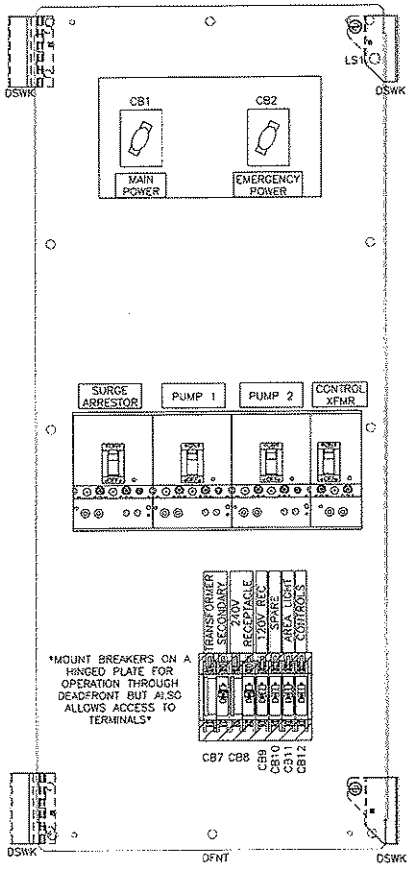

POWER ENCLOSURE DEADFRONT LAYOUT

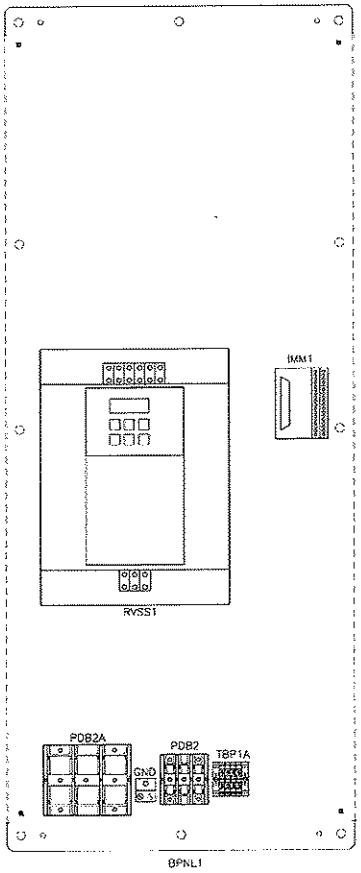

PUMP 1 ENCLOSURE BACKPANEL LAYOUT

*SEE SHEET 9 FOR SIDE PANEL LAYOUTS

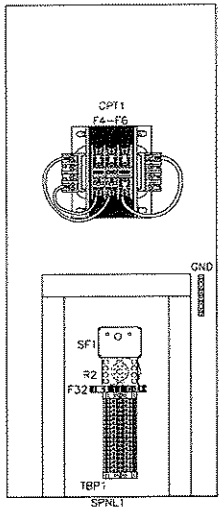

PUMP 1 ENCLOSURE RIGHT SIDEPANEL LAYOUT

REVISIONS	BY

IMPROVEMENTS TO WASTEWATER COLLECTION SYSTEM

LIFT STATION CONSTRUCTION DETAILS

ELECTRICAL STANDARDS

FINAL SUBMITTAL

EMERALD COAST UTILITIES AUTHORITY

APPROVED BY:

Drawn:	
Designed:	
Checked:	
Date:	MAY '13
Scale:	
Project No:	
Sheet No.	8
	OF 18 Sheets

ALL WORK SHALL BE CONSTRUCTED IN ACCORDANCE WITH THE LATEST EDITION OF THE E.C.U.A. STANDARD SPECIFICATIONS

NOTES

1. SEE SHEET 15 FOR SCHEDULES, LEGENDS AND PANEL TAGS.
2. LAYOUT OF THE VFD SECTION DEPICTS THE LARGEST POSSIBLE HORSEPOWER CONFIGURATION.

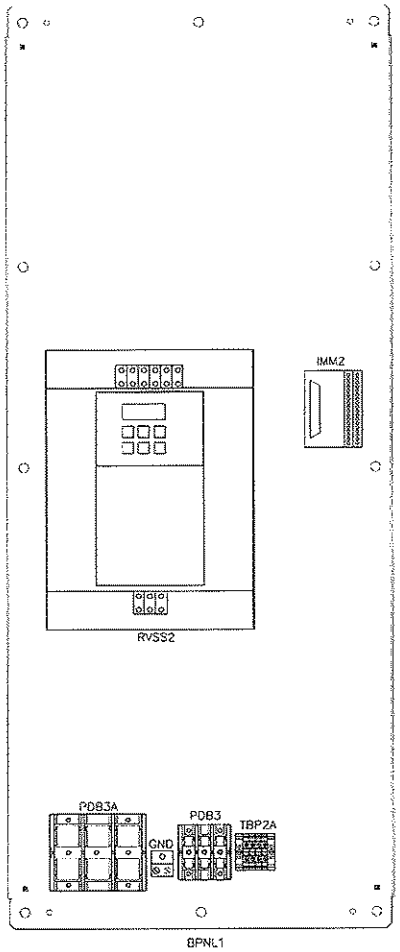

PUMP 2 ENCLOSURE BACKPANEL LAYOUT

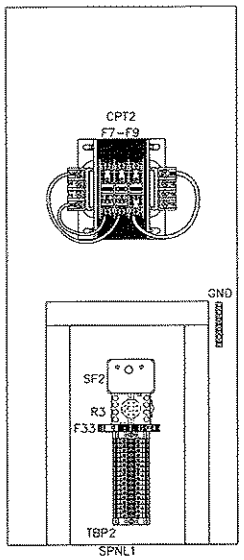

PUMP 2 ENCLOSURE RIGHT SIDEPANEL LAYOUT

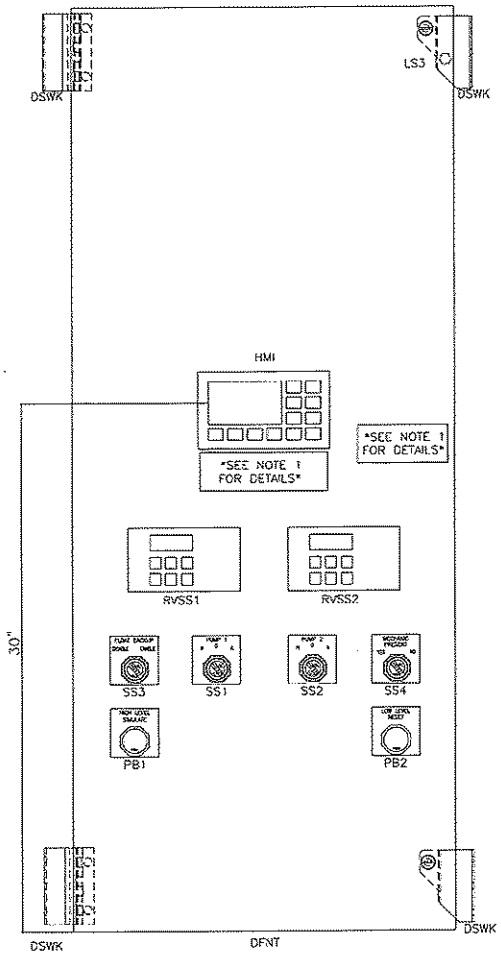

CONTROL PANEL DEADFRONT LAYOUT

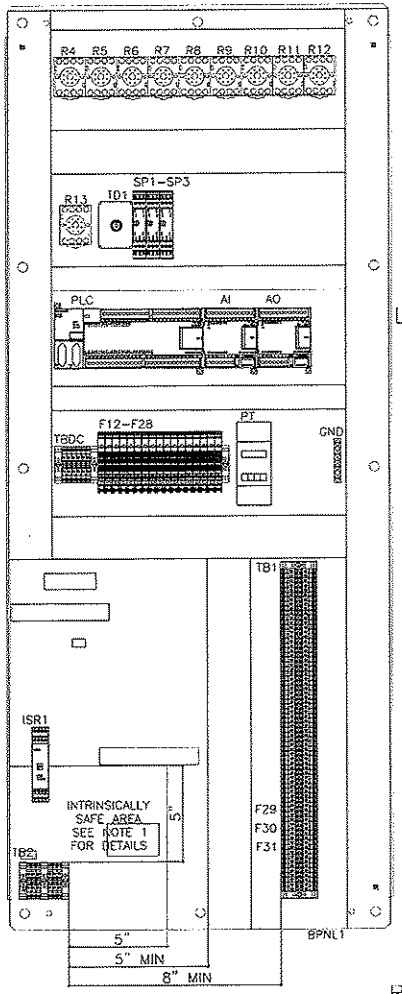

CONTROL ENCLOSURE BACKPANEL LAYOUT

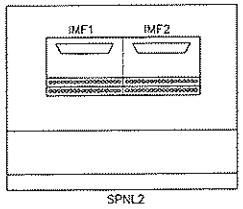

CONTROL ENCLOSURE LEFT SIDEPANEL LAYOUT

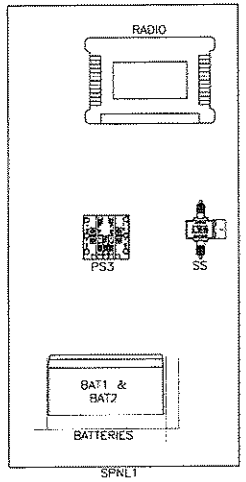

CONTROL ENCLOSURE RIGHT SIDEPANEL LAYOUT

REVISIONS	BY

IMPROVEMENTS TO WASTEWATER COLLECTION SYSTEM

LIFT STATION CONSTRUCTION DETAILS

ELECTRICAL STANDARDS

FINAL SUBMITTAL

EMERALD COAST UTILITIES AUTHORITY

APPROVED BY:

Drawn:	
Designed:	
Checked:	
Date:	MAY '13
Scale:	
Project No:	
Sheet No.	9
	OF 18 Sheets

480V RVSS Equipment List

Item	Tag	Panel	Description	Manufacturer	Model	Qty
1	ENC1	All	60X24X18 NEMA 4X SS Enclosure	Hoffman	A60241SSSFSN4	4
2	BPNL1	All	60x24 Painted Steel Backpanel	Hoffman	A60P24F1	4
3	SPNL1	Pump 1, 2 & Control	28"H x 12"W Aluminum Sidepanel	EWS	Custom	3
4	DFNT	Power & Control	60x24 Aluminum Deadfront Panel	EWS	Custom	2
5	DSWK	Power & Control	Door Swing Kit	Hoffman	ANADFK	2
6	FRM	All	Expanded Metal Stainless Steel Frame	EWS	SEE DRAWINGS	1
7	PDB	Power	Incoming Power Distribution Block PDB	Square D	SEE HP TABLE SHEET 11	1
8	PDB	Power	Incoming Power Distribution Block PDB Cover	Square D	SEE HP TABLE SHEET 11	1
9	GND	Power	Power Panel Ground Bar	Square D	PK15GTA-L	1
10	ENC3	Power	16"H x 16"W x 8"D Screw Cover Type 3R Enclosure	Hoffman	A16168GSC	1
11	CB1	Power	600V Main Circuit Breaker	Square D	SEE HP TABLE SHEET 11	1
12	CB2	Power	600V Emergency Circuit Breaker	Square D	SEE HP TABLE SHEET 11	1
13	CB1,CB2	Power	Mechanical Interlock for H/J Frame Circuit Breakers	Square D	S29369	1
14	CB1,CB2	Power	Door Mounted Rotary Handle for H/J Frame Circuit Breakers	Square D	S29338	2
15	GEN REC	Power	NEMA 4X Generator Receptacle	Appleton	AR20044RS	1
16	GEN REC	Power	NEMA 4X Generator Plug (Ship Loose)	Appleton	AP20044E-RS	1
17	PDB1	Power	Main Power Distribution Block	Square D	SEE HP TABLE SHEET 11	1
18	PDB1	Power	Main Power Distribution Block Cover	Square D	SEE HP TABLE SHEET 11	1
19	F1-F3	Power	3 Pole Rejection type Fuse Block	Bussmann	BC6033PQ	1
20	F1-F3	Power	1A Rejection Type Fuse, Class CC	Bussmann	KTK-R-1	3
21	F1-F3	Power	Fuse Cover	Bussmann	SAMI-TN	3
22	PM	Power	480V Phase Monitor	Timemark	A257B	1
23	PM	Power	480V, 8-Pin Relay Base	ABB	OT08PC	1
24	CB3-CB6	Power	Breaker Stand	EWS	Custom	1
25	CB3	Power	30A 480V 3 Pole Circuit Breaker, Main Surge Arrestor	Square D	HDL36030	1
26	SA	Power	Main Surge Arrestor	SSI	SDLA3N4	1
27	CB4, CB5	Power	600V 3 Pole Circuit Breaker. Starter	Square D	SEE HP TABLE SHEET 11	2
28	CB4,CB5	Power	H & J Frame Circuit Breaker Locking System	Square D	S29371	2
29	PDB2A, PDB3A	Pump 1 & 2	Power Distribution Block	Square D	SEE HP TABLE SHEET 11	2
30	PDB2A, PDB3A	Pump 1 & 2	Power Distribution Block Cover	Square D	SEE HP TABLE SHEET 11	2
31	RVSS1, RVSS2	Pump 1 & 2	480V Reduced Voltage Soft Starter	Solcon	SEE HP TABLE SHEET 11	2
32	RVSS1, RVSS2	Control	Remote keypad for Solcon RVS-DN SoftStarter	Solcon	DISP66400M3	2
33	IMM1, IMM2	Pump 1 & 2	FLKM-037 SUB/S Interface Cable Male	Phoenix Contact	2281115	2
34	IMF1, IMF2	Control	FLKM-037 SUB/B Interface Cable Female	Phoenix Contact	2281212	2
35	IMM1, IMM2, IMF1, IMF2	Pump 1, 2 & Control	37 Pin D-Sub Cable, DB-37 Male to DB-37 Female	GC Electronics	45-463	2
36	SPNL2	Control	10"H x 12"W Aluminum Sidepanel	EWS	Custom	1
37	GND	Pump 1 & 2	Power Panel to Starter Panel Ground	NSI	2-GT	2
38	PDB2, PDB3	Pump 1 & 2	Motor Power Distribution Block PDB2&3, (1)#14-2/0.....(1)#14-2/0	Square D	9080LBA362101	2
39	PDB2, PDB3	Pump 1 & 2	Motor Power Distribution Block PDB2&3 Cover	Square D	9080LB23	2
40	F4, F5, F7, F8	Pump 1 & 2	3-1/2A Rejection Type Fuse, RVSS CPT Primary	Bussmann	FNQ-R-3-1/2	4
41	CPT1, CPT2	Pump 1 & 2	480/120V 750VA Transformer	Square D	9070TF750D1	2
42	CPT1, CPT2	Pump 1 & 2	Transformer Finger Safe Cover, VFD CPT Primary	Square D	9070FSC-2	2
43	CPT1, CPT2	Pump 1 & 2	Fuse Puller, RVSS CPT	Square D	9070FP-1	2
44	F6, F9	Pump 1 & 2	10A Fuse, RVSS CPT Secondary	Bussmann	FNQ-10	2
45	CB6	Power	25A 480V 2 Pole Circuit Breaker, XF1 Transformer Primary	Square D	HDL26025	1
46	XF1	Power	5kVA 480V/240-120V Transformer, NEMA 3R Stainless Steel	Square D	5S1F5S	1
47	CB7-CB13	Power	Hinged Aluminum Bracked for Mounting 240/120V Circuit Breakers through Deadfront	EWS	Custom	1
48	CB7	Power	30A 240/120V 2 Pole Circuit Breaker, XF1 Transformer Secondary	Square D	QOU230	1
49	PDB4	Power	240V/120V Power Distribution Block PDB4, (1) #14-2 .. (4) #18-10	Square D	9080LBA361104	1
50	CB8	Power	20A, 240V, 2 Pole Circuit Breaker	Square D	QOU220	1
51	REC1	Power	20A, 250V, 6-20R Receptacle	P&S	5872I	1
52	CB9, CB10	Power	20A, 120V 1 Pole Circuit Breaker	Square D	QOU120	2
53	REC2	Power	120V 20A GFCI Duplex Receptacle NEMA5-20R	P&S	2094-I	1
54	REC1, REC2	Power	Custom Receptacle Cover NEMA 4X S.S.	HOFFMAN	HIDRPSS-MOD	1
55	REC1, REC2	Power	3/4 1G AL FD BOX	Appelton	4CS-1/2	2
56	CB11	Power	15A, 120V, 1 Pole Circuit Breaker	Square D	QOU115	1
57	CB12	Power	10A, 120V, 1 Pole Circuit Breaker	Square D	QOU110	1
58	R1	Power	120V 3PDT General Purpose Relay w/ Indicator Lamp	Potter Brumfield	KRPA-14AN-120	1
59	R1-R13, SF1, SF2	All	11 Pin Relay Base	ABB	NDS-11	15
60	F10, F11	Power	Fused Terminal Block w/ 120V Blown Fuse Indication	Allen Bradley	1492-H4	4
61	-	Power & Control	1492-H4 &H5 Fused Terminal Block End Cover	Allen Bradley	1492-N37	2
62	F10, F11	Power	3A Fuse, Power Supply Primary	Bussmann	AGC-3	2
63	PS1, PS2	Power	10A 24VDC Power Supply	Phoenix Contact	2938604	2
64	D1, D2	Power	10A Diode, P1000A	Newark	51R7094	2
65	-	Power	Custom Stand/Lexan Hinged Cover w/Alum Stand for TBPP & Power Supply Fuses	EWS	Custom	1
66	F12-F28	Control	Fused Terminal Block w/ 24VDC Blown Fuse Indication	Allen Bradley	1492-H5	17

480V RVSS Equipment List

ALL WORK SHALL BE CONSTRUCTED IN ACCORDANCE WITH THE LATEST EDITION OF THE ECUA STANDARD SPECIFICATIONS

Item	Tag	Panel	Description	Manufacturer	Model	Qty
67	F12-F15	Control	10A Fuse, Power Supply Secondary & Batteries	Bussmann	AGC-10	4
68	BAT1, BAT2	Control	12VDC Battery	Power Sonic	PS1290	2
69	PS3	Control	24VDC-15VDC Converter, 2A	Vicor	V1-J12-EY-B1	1
70	RADIO	Control	400MHz Radio	GE MDS	5004MD	1
71	RADIO	Control	DB9 Male/Male Gender Changer	Office Depot	946660	1
72	RADIO/SS	Control	3 Foot LMR400UF Coaxial Jumper NMale to TNCMale	Tessco	324503	1
73	SS	Control	Coaxial Surge Suppressor, 50-700MHz	Polyphaser	IS-50NX-CL	1
74	-	-	50FT Coaxial Cable, NMale-Nmale, Wireless Solutions 400-07-07-P50 (Ship Loose)	Tessco	37087S	1
75	-	-	400MHz Yagi Antenna w/ N Female Connector, MAXRAD MYA4506N (Ship Loose)	Tessci	37634	1
76	-	-	Antenna Tower 5' Base Section, ROHN R-5B25G5 (Ship Loose)	Tessco	64559	1
77	-	-	Antenna Tower 10' Mid Section, ROHN R-25G (Ship Loose)	Tessco	56866	1
78	-	-	Antenna Tower 9' Top Section, ROHN R-25AG2 (Ship Loose)	Tessco	70080	1
79	-	-	21' 1-1/4" S.S. Antenna Mast (Ship Loose)	Bell Steel	023005	1
80	F18, F19	Control	1/4A Fuse	Bussmann	AGC-1/4	2
81	F16, F17, F23, F24	Control	2A Fuse	Bussmann	AGC-2	4
82	SS1, SS2	Control	3 Position Selector Switch, 30MM	Square D	9001SKS43BH2	2
83	R2-R13	Control	24VDC 3PDT General Purpose Relay w/ Indicator Lamp	Potter Brumfield	KRPA-14DN-24	12
84	SF1, SF2	Control	120V Seal Failure Relay	ATC	SPM-120-AAA-10K	2
85	ISR1	Control	Intrinsically Safe Barrier Relay, 24VDC	Pepperl & Fuchs	KFD2-SR2-Ex2.W	1
86	TB2	Control	Terminal Block, Blue TB2	Phoenix Contact	3044115	4
87	TB2	Control	Terminal Block, Blue End Barrier, TB2	Phoenix Contact	3047235	1
88	TB2	Control	Ground Terminal Blocks, TB2	Phoenix Contact	3044128	2
89	PB1, PB2	Control	Push Button, Black 1NO 1NC	Square D	9001SKR1BH13	2
90	SS3, SS4	Control	2 Position Selector Switch, 30MM	Square D	9001SK511BH2	2
91	TD1	Control	24VDC 0-180 Second Time Delay Relay	Square D	RE48ATM12MW	1
92	TD1	Control	8 Pin Relay Base	ABB	NDS-8	1
93	AL	Control	24VDC Red Alarm Light	Federal Signal	LP3M-012-048R	1
94	F20, F27, F28	Control	1/10A Fuse	Bussmann	AGC-1/10	3
95	HMI	Control	TD400C Text Display	Siemens	6AV6 640-0AA00-0AX1	1
96	F21, F22	Control	1A Fuse	Bussmann	AGC-1	2
97	PLC	Control	S7-200 Dual Com Port Processor w/ 24 DI & 16 DO Points	Siemens	6ES7 216-2AD23-0XB0	1
98	AI	Control	S7-200 4 Point AI Module	Siemens	6ES7 231-0HC22-0XA0	1
99	AO	Control	S7-200 2 Point AO Module	Siemens	6ES7 232-0HB22-0XA0	1
100	PLC	Control	S7-200 Communication cable PC/PPI RS-232/485	Siemens	6ES7 901-3CB30-0XA0	1
101	SP1-SP3	Control	Plug In DI Surge Suppression, PT 4x1...DC	Phoenix Contact	2838322	3
102	SP1-SP3	Control	Terminal Block Base for Plugable Surge Supression, PT 4x1-BE	Phoenix Contact	2839363	3
103	LS1-LS4	Control	Panel Intrusion Switches, N.C. Contacts	NSI	76030PS	4
104	F25	Control	1-1/2A Fuse	Bussmann	AGC-1-1/2	1
105	F26	Control	3/4A Fuse	Bussmann	AGC-3/4	1
106	PT	Control	Level Transmitter	Endress & Hauser	RMA42AAAH2	2
107	PT	-	Submersible Level Transducer, 20ft Range w/ 60ft Cable & Mounting Clamp (Ship Loose)	Endress & Hauser	FMX21-FE223GGE21APO	1
108	F29-F31	Control	24VDC Fused Terminal Block With Indication	Phoenix Contact	3046090	3
109	F29-F31	Control	1/4A Fuse, Analog Isputs	Bussmann	GMA-250	3
110	VR1, VR2	Control	6A Fuse, RVSS Control Power	Bussmann	AGC-6	2
111	TBPP,1,DC,P1, 1A, P2 & 2A	All	Terminal Block, Gray 26-10 AWG Wire	Phoenix Contact	3044102	126
112	TBPP,1,DC,P1, 1A, P2 & 2A	All	Terminal Block End Barrier	Phoenix Contact	3047028	8
113	TBPP,1,DC,P1, 1A, P2 & 2A	All	Terminal Block End Anchor	Phoenix Contact	0800886	17
114	TBP1A, TBP2A	Pump 1 & 2	Terminal Block, Gray 26-8 AWG Wire, TBVFD1A & TBVFD2A	Phoenix Contact	3044131	8
115	GND	Control	Control Panel Ground Bar	Square D	PK5GTA	3
116		-	Meter Socket (SHIP LOOSE)	Milbank	SEE HP TABLE SHEET 11	1
117	-	-	Stainless Steel 60' Float (SHIP LOOSE)	Anchor Scientific	P60NO-SST	2
118	-	-	Insulated Ground Neutral (SHIP LOOSE)	Square D	SN400LA	1
119	-	-	Ground Bar Kit (SHIP LOOSE)	Square D	PKDGTI250	1
120	-	-	NEMA 4A S.S. Disconnect (SHIP LOOSE)	Square D	J250DS	1
121	-	-	Antenna Mast Stabilization Plate (Ship Loose)	EWS	Custom	1
122	-	-	Stainless Steel 'U' Bolt, 2" Pole, 5/16" Diameter Bolt w/ 2-1/2" Threads (SHIP LOOSE)			1
123	-	-	5/16" Stainless Steel Flat Washer for 'U' Bolt (SHIP LOOSE)			2
124	-	-	5/16" Stainless Steel Lock Washer for 'U' Bolt (SHIP LOOSE)			2
125	-	-	5/16" Stainless Steel Nut for 'U' Bolt (SHIP LOOSE)			2
126	-	-	Stainless Steel 'U' Bolt, 1/4" Diameter (SHIP LOOSE)			2
127	-	-	1/4" Stainless Steel 1/4" Nut for 'U' Bolt (SHIP LOOSE)			4
128	-	-	1-1/4" Reduction Bushing for Antenna Tower, ROHN R-TB50 (SHIP LOOSE)	Tessco	36882	1
129	PLC	Control	S7-200 Memory Module	Siemens	6ES7 291BGF230AX0	1
130	N	Power	Generator Neutral Block, (1)#6-400kcmil ... (6)#14-2	Square D	9080LBA363106	1
131	N	Power	Generator Neutral Block Cover	Square D	9080LB31	1
132	SPNL3	Power	32"X12" Aluminum Sidepanel	EWS	Custom	1
133	FM	Control	Flow Meter	Endress & Hauser	50P Compact	1
134	PR	Control	Pressure Transmitter	Endress & Hauser	PMP71-AAC1PG1RAA	1

REVISIONS	BY

IMPROVEMENTS TO WASTEWATER COLLECTION SYSTEM

LIFT STATION CONSTRUCTION DETAILS

ELECTRICAL STANDARDS

FINAL SUBMITTAL

EMERALD COAST UTILITIES AUTHORITY

APPROVED BY:

Drawn:
Designed:
Checked:
Date: MAY '13
Scale:
Project No:
Sheet No. 10
OF 18 Sheets

ALL WORK SHALL BE CONSTRUCTED IN ACCORDANCE WITH THE LATEST EDITION OF THE E.C.U.A. STANDARD SPECIFICATIONS

Horsepower Related Compontents Equipment List						
Item	Tag	Horsepower				
		20	30	40	50	60
Incoming Power Distribution Block	PDB	9080LBA362101	9080LBA363101	9080LBA363101	9080LBA363101	9080LBA363101
Incoming Power Distribution Block Cover	PDB	9080LB23	9080LB33	9080LB33	9080LB33	9080LB33
Main Circuit Breaker	CB1	HDL36110	HDL36150	JDL36175	JDL36200	JDL36225
Emergency Circuit Breaker	CB2	HDL36110	HDL36150	JDL36175	JDL36200	JDL36200
Main Power Distribution Block	PDB1	9080LBA363206	9080LBA365208	9080LBA365208	9080LBA365208	9080LBA365208
Main Power Distribution Block Cover	PDB1	9080LB33	9080LB53	9080LB53	9080LB53	9080LB53
Starter Circuit Breaker	CB4, CB5	HDL36060	HDL36080	HDL36090	HDL36100	HDL36110
Motor Power Distribution Block	PDB2A, PDB3A	9080LBA362104	9080LBA362104	9080LBA363104	9080LBA363104	9080LBA363104
Motor Power Distribution Block Cover	PDB2A, PDB3A	9080LB23	9080LB23	9080LB33	9080LB33	9080LB33
480V RVSS	RVSS1, RVSS2	RVS-DN-44-480-115-3+M+8+9+D+U-S	RVS-DN-44-480-115-3+M+8+9+D+U-S	RVS-DN-58-480-115-3+M+8+9+D+U-S	RVS-DN-72-480-115-3+M+8+9+D+U-S	RVS-DN-85-480-115-3+M+8+9+D+U-S
Meter Socket	-	UAP9701-RRL	UAP9701-RRL	UAP9701-RRL	UAP3566-X-HSP	UAP3566-X-HSP

Horsepower Related Power Conductors, CGB's and Hubs						
Conductor Tag		Horsepower				
		20	30	40	50	60
P-01, P-03 & P-04	Description	(3)#2	(3)#1	(3)#2/0	(3)#3/0	(3)#4/0
	Manufacturer	N/A	N/A	N/A	N/A	N/A
	Catalog #	N/A	N/A	N/A	N/A	N/A
	Length (Max Ft)	N/A	N/A	N/A	N/A	N/A
	Cable Dia (in)	0.384"	0.446"	0.532"	0.584"	0.642"
	Appleton Connector	(3) -CG-3150	(3) -CG-3775	(3) -CG-5075	(3) -CG-5075	(3) -CG-6275
	Connector Range	0.312"-0.437"	0.375"-0.500"	0.500"-0.625"	0.500"-0.625"	0.625"-0.750"
	Meyers Hub	(3) 1/2" - STA-1	(3) 3/4" - STA-2	(3) 3/4" - STA-2	(3) 3/4" - STA-2	(3) 3/4" - STA-2
P-02A	Description	(1)#6	(1)#6	(1)#6	(1)#6	(1)#4
	Manufacturer	N/A	N/A	N/A	N/A	N/A
	Catalog #	N/A	N/A	N/A	N/A	N/A
	Length (Max Ft)	N/A	N/A	N/A	N/A	N/A
	Cable Dia (in)	0.254"	0.254"	0.254"	0.254"	0.324"
	Appleton Connector	(1)-GC-1850	(1)-GC-1850	(1)-GC-1850	(1)-GC-1850	(1)-GC-3150
	Connector Range	0.187"-0.312"	0.187"-0.312"	0.187"-0.312"	0.187"-0.312"	0.312"-0.437"
	Hub	(1) 1/2" - STA-1	(1) 1/2" - STA-1	(1) 1/2" - STA-1	(1) 1/2" - STA-1	(1) 1/2" - STA-1
P-02B	Description	(1)#6	(1)#6	(1)#6	(1)#6	(1)#4
	Manufacturer	Southwire	Southwire	Southwire	Southwire	Southwire
P-05 & P-06	Description	(3)#2	(3)#1	(3)#2/0	(3)#3/0	(3)#3/0
	Manufacturer	N/A	N/A	N/A	N/A	N/A
	Catalog #	N/A	N/A	N/A	N/A	N/A
	Length (Max Ft)	N/A	N/A	N/A	N/A	N/A
	Cable Dia (in)	0.384"	0.446"	0.532"	0.584"	0.584"
	Appleton Connector	(3) -CG-3150	(3) -CG-3775	(3) -CG-5075	(3) -CG-5075	(3) -CG-5075
	Connector Range	0.312"-0.437"	0.375"-0.500"	0.500"-0.625"	0.500"-0.625"	0.500"-0.625"
	Hub	(3) 1/2" - STA-1	(3) 3/4" - STA-2	(3) 3/4" - STA-2	(3) 3/4" - STA-2	(3) 3/4" - STA-2
P-07 & P-09	Description	(3)#8 W/G, TC	(3)#6 W/G, TC	(3)#2 W/G, TC	(3)#2 W/G, TC	(3)#2 W/G, TC
	Manufacturer	Houston Wire	Houston Wire	Houston Wire	Houston Wire	Houston Wire
	Catalog #	HW 154 00803	HW 154 00603	HW 154 00203	HW 154 00203	HW 154 00203
	Length (Max Ft)	19 FT	19 FT	19 FT	19 FT	19 FT
	Cable Dia (in)	0.58"	0.69"	1.03"	1.03"	1.03"
	Appleton Connector	(2) - CG-5075	(2) - CG-6275	(2) - CG-100125	(2) - CG-100125	(2) - CG-100125
	Connector Range	0.500"-0.625"	0.625"-0.750"	1.000"-1.125"	1.000"-1.125"	1.000"-1.125"
	Hub	(2) 3/4" - STA-2	(2) 3/4" - STA-2	(2) 1-1/4" - STA-4	(2) 1-1/4" - STA-4	(2) 1-1/4" - STA-4
P-08 & P-10	Description	(3)#8	(3)#6	(3)#2	(3)#2	(3)#2
	Manufacturer	Southwire	Southwire	Southwire	Southwire	Southwire

REVISIONS	BY

IMPROVEMENTS TO WASTEWATER COLLECTION SYSTEM

LIFT STATION CONSTRUCTION DETAILS

ELECTRICAL STANDARDS

FINAL SUBMITTAL

EMERALD COAST UTILITIES AUTHORITY

APPROVED BY:

Drawn:
Designed:
Checked:
Date: MAY '13
Scale:
Project No:
Sheet No. 11
OF 18 Sheets

ALL WORK SHALL BE CONSTRUCTED IN ACCORDANCE WITH THE LATEST EDITION OF THE E.C.U.A. STANDARD SPECIFICATIONS

Power & Control Conductors, CGB's and Hubs

Cable Number	Description	Manufacturer	Catalog Numer	Length (Max Ft)	Cable Diameter	Appleton Liquidtight Cable Connector	Connector Cable Range	Crouse-Hinds Myers Hub	From Panel/Enclosure	To Panel/Enclosure
P-13	(3)#8 AWG W/GND, Tray Cable	Houston Wire & Cable	HW 154 00803	6 FT	0.58"	(1) - CG-5075	0.500"-0.625"	(1) 3/4" - STA-2	Power Panel	480/240-120V Transformer
P-14	(3)#6 AWG W/GND, Tray Cable	Houston Wire & Cable	HW 154 00603	6 FT	0.69"	(1) - CG-6275	0.625"-0.750"	(1) 3/4" - STA-2	480/240-120V Transformer	Power Panel
P-15	3-1/C #12 AWG	N/A	N/A	AS REQ'D	N/A	N/A	N/A	N/A	Power Panel	Power Panel
P-16	3-1/C #12 AWG	N/A	N/A	AS REQ'D	N/A	N/A	N/A	N/A	Power Panel	Power Panel
C-01	(16) #14 AWG, Tray Cable	Houston Wire & Cable	HW 151 01416	24 FT	0.68"	(2) - CG-6275	0.625"-0.750"	(2) 3/4" - STA-2	Power Panel	Control Panel
C-02	(16) #14 AWG, Tray Cable	Houston Wire & Cable	HW 151 01416	22 FT	0.68"	(2) - CG-6275	0.625"-0.750"	(2) 3/4" - STA-2	Pump 1 Panel	Control Panel
C-03	(16) #14 AWG, Tray Cable	Houston Wire & Cable	HW 151 01416	19 FT	0.68"	(2) - CG-6275	0.625"-0.750"	(2) 3/4" - STA-2	Pump 2 Panel	Control Panel
C-04	1 Pair #16 SH, Tray Cable	Houston Wire & Cable	HW 120 01601	22 FT	0.33"	(2) - CG-2575	0.250"-0.375"	(2) 3/4" - STA-2	Pump 1 Panel	Control Panel
C-05	1 Pair #16 SH, Tray Cable	Houston Wire & Cable	HW 120 01601	19 FT	0.33"	(2) - CG-2575	0.250"-0.375"	(2) 3/4" - STA-2	Pump 2 Panel	Control Panel
PUMP 1-PWR	Per Mfg Specs	N/A	N/A	N/A	N/A	CG Series based on Mfg Specs	N/A	STA Series based on Mfg Specs	Field (Pump 1)	Pump 1 Panel
PUMP 1-MTP	Per Mfg Specs	N/A	N/A	N/A	N/A	CG Series based on Mfg Specs	N/A	STA Series based on Mfg Specs	Field (Pump 1)	Pump 1 Panel
PUMP 1-SF	Per Mfg Specs	N/A	N/A	N/A	N/A	CG Series based on Mfg Specs	N/A	STA Series based on Mfg Specs	Field (Pump 1)	Pump 1 Panel
PUMP 2-PWR	Per Mfg Specs	N/A	N/A	N/A	N/A	CG Series based on Mfg Specs	N/A	STA Series based on Mfg Specs	Field (Pump 2)	Pump 2 Panel
PUMP 2-MTP	Per Mfg Specs	N/A	N/A	N/A	N/A	CG Series based on Mfg Specs	N/A	STA Series based on Mfg Specs	Field (Pump 2)	Pump 2 Panel
PUMP 2-SF	Per Mfg Specs	N/A	N/A	N/A	N/A	CG Series based on Mfg Specs	N/A	STA Series based on Mfg Specs	Field (Pump 2)	Pump 2 Panel
Float Switch 1	Float Switch Cable	BY OTHERS	N/A	N/A	0.56"	(1) - CG-5050	0.500"-0.625"	(1) 1/2" - STA-1	Field (Float Switch)	Control Panel
Float Switch 2	Float Switch Cable	BY OTHERS	N/A	N/A	0.56"	(1) - CG-5050	0.500"-0.625"	(1) 1/2" - STA-1	Field (Float Switch)	Control Panel
Pressure Xducer	Pressure Transducer Cable	BY OTHERS	N/A	N/A	0.35"	(1) - G-3150	0.312"-0.437"	(1) 1/2" - STA-1	Field (Float Switch)	Control Panel
Antenna COAX	Coaxial Cable	BY OTHERS	N/A	N/A	0.408"	(1) - CG-3750	0.375"-0.500"	(1) 1/2" - STA-1	Field (Antenna)	Control Panel
Comm-1	(37) #18 AWG, Tray Cable	Houston Wire & Cable	HW15001837	20 FT	0.74"	(1) - CG-6275	0.625"-0.750"	(1) 3/4" - STA-2	Control Panel	Pump 1 Panel
Comm-2	(37) #18 AWG, Tray Cable	Houston Wire & Cable	HW15001837	20 FT	0.74"	(1) - CG-6275	0.625"-0.750"	(1) 3/4" - STA-2	Control Panel	Pump 2 Panel

REVISIONS	BY

IMPROVEMENTS TO WASTEWATER COLLECTION SYSTEM

LIFT STATION CONSTRUCTION DETAILS

ELECTRICAL STANDARDS

FINAL SUBMITTAL

EMERALD COAST UTILITIES AUTHORITY

APPROVED BY:

Drawn:
Designed:
Checked:
Date: MAY '13
Scale:
Project No:
Sheet No. 12
Of 18 Sheets

ALL WORK SHALL BE CONSTRUCTED IN ACCORDANCE WITH THE LATEST EDITION OF THE E.C.U.A. STANDARD SPECIFICATIONS

NOTES:

1) ALL SPARE WIRE WILL BE CLEARLY LABELED WITH THE CABLE NUMBER & A SPARE DESIGNATION ON INDIVIDUAL WIRES. THESE SPARES WILL BE LONG ENOUGH TO REACH ANY POINT IN THE PANEL.
2) SPARE CONDUCTORS SHOULD BE TRIMMED AND HEAT SHRINK SHOULD BE USED TO SECURE THE SPARE CONDUCTORS IN THE CABLE.
3) THE INNER CONNECTING CONDUCTORS BETWEEN THE PANELS ARE CODED AS FOLLOWS: THE FIRST GROUP OF CHARACTER IS THE WIRE NUMBER AND THE SECOND GROUP IS THE COLOR (I.E. 1(BK) SIGNIFIES THAT THE WIRE NUMBER IS 1 AND THE COLOR IS BLACK). WIRE COLOR CODE AS FOLLOWS: BK-BLACK, RD-RED, BU-BLUE, OR-ORANGE, YL-YELLOW, BN-BROWN. FOR COLORS THAT ARE DENOTED AS XX/YY, XX IS THE BASE COLOR AND YY IS THE SPIRAL STRIPE (I.E. RD/BK IS A RED WIRE WITH A BLACK SPIRAL STRIPE).
4) SEE SHEETS 11 & 12 FOR PANEL TO PANEL INNER CONNECTING CONDUCTOR AND CABLE DETAILS.

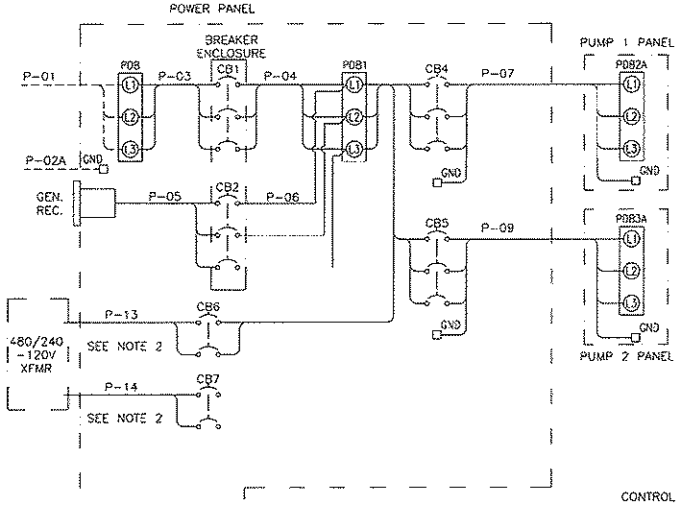

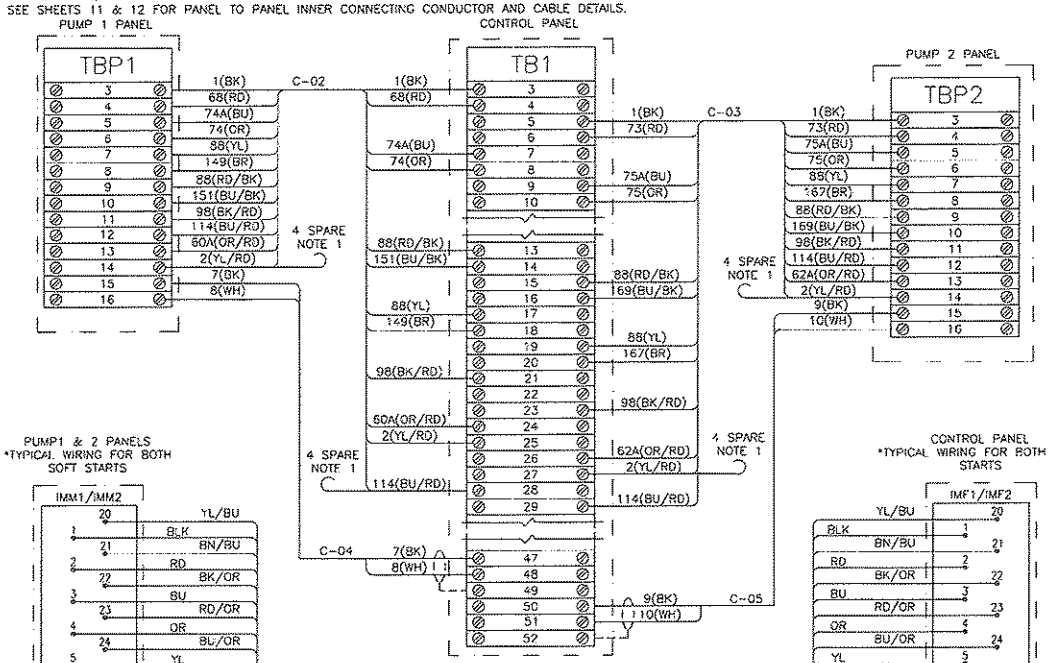

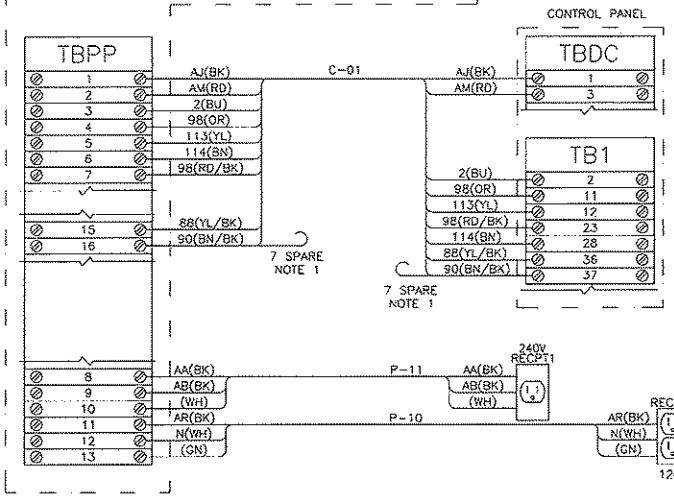

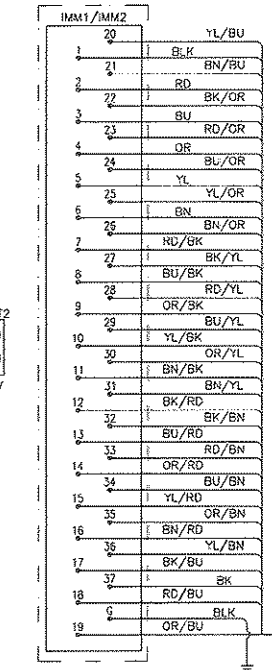

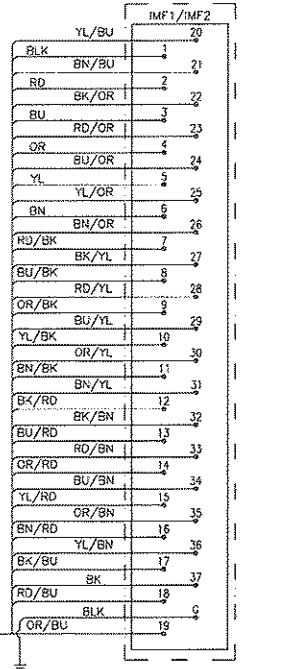

REVISIONS	BY

IMPROVEMENTS TO WASTEWATER COLLECTION SYSTEM

LIFT STATION CONSTRUCTION DETAILS

ELECTRICAL STANDARDS

FINAL SUBMITTAL

EMERALD COAST UTILITIES AUTHORITY

APPROVED BY:

Drawn:	
Designed:	
Checked:	
Date:	MAY '13
Scale:	
Project No:	
Sheet No.	13
	OF 18 Sheets

ALL WORK SHALL BE CONSTRUCTED IN ACCORDANCE WITH THE LATEST EDITION OF THE E.C.U.A. STANDARD SPECIFICATIONS

NOTES:

1. TOP AND BOTTOM OF BASE TO BE LEFT OPEN.
2. DRILL TOP OF BASE TO ATTACH ENCLOSURES AS REQUIRED.
3. DRILL BOTTOM OF BASE TO ATTACH TO SLAB AS REQUIRED.

ATTENTION

THIS LAYOUT IS ONE OF TWO (2) POSSIBLE CHOICES - SEE SHEET 14A FOR THE OTHER OPTION. IF THIS LAYOUT OPTION IS SELECTED, SEE SHEET 7 FOR ASSOCIATED PANEL LAYOUT DETAILS.

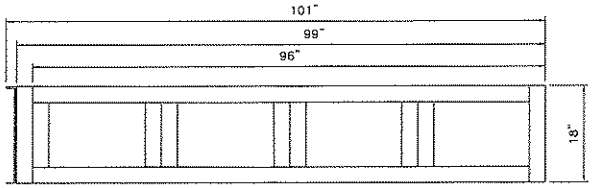

TOP VIEW

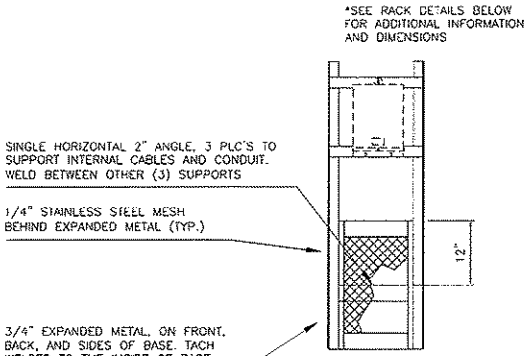

END VIEW

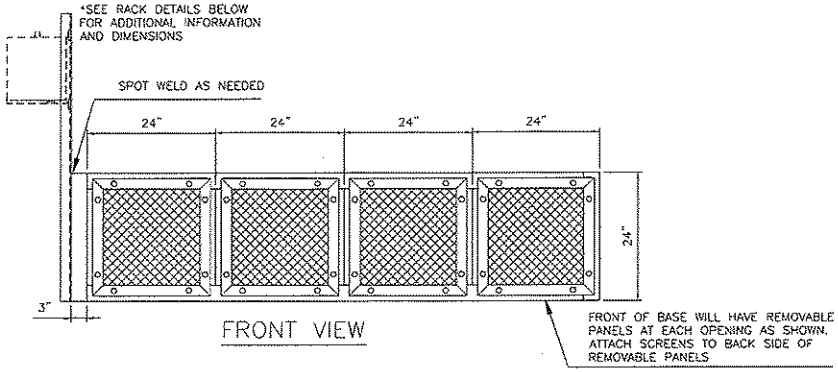

FRONT VIEW

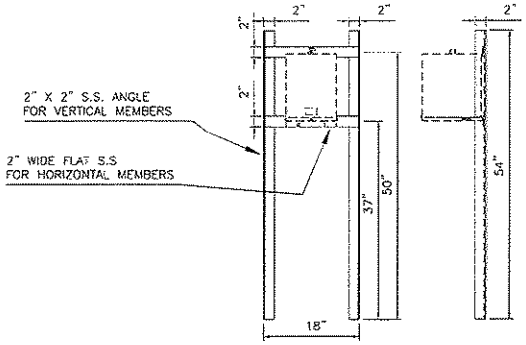

RACK DETAILS

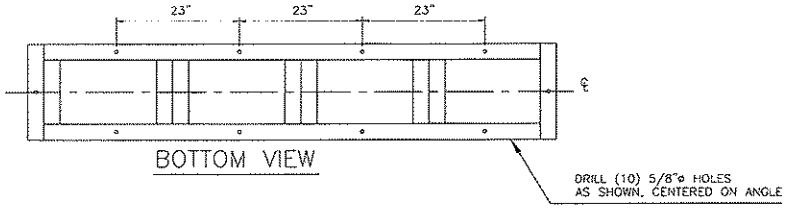

BOTTOM VIEW

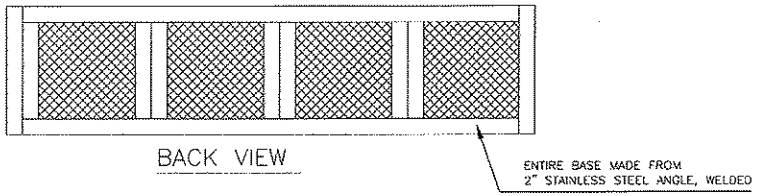

BACK VIEW

REVISIONS	BY

IMPROVEMENTS TO WASTEWATER COLLECTION SYSTEM

LIFT STATION CONSTRUCTION DETAILS

ELECTRICAL STANDARDS

FINAL SUBMITTAL

EMERALD COAST UTILITIES AUTHORITY

APPROVED BY:

Drawn:	
Designed:	
Checked:	
Date:	MAY '13
Scale:	
Project No:	
Sheet No.	14
	Of 18 Sheets

ALL WORK SHALL BE CONSTRUCTED IN ACCORDANCE WITH THE LATEST EDITION OF THE E.C.U.A. STANDARD SPECIFICATIONS

Power Panel Fuse Schedule				
Fuse	Type	Voltage	Amps	Description
F1	KTK-R-1	600	1A	Phase Monitor A Phase
F2	KTK-R-1	600	1A	Phase Monitor B Phase
F3	KTK-R-1	600	1A	Phase Monitor C Phase
F10	AGC-3	250	3A	Power Supply 1 Primary
F11	AGC-3	250	3A	Power Supply 2 Primary

Pump 1 Panel Fuse Schedule				
Fuse	Type	Voltage	Amps	Description
F4	FNQ-R-3-1/2	600	3-1/2A	Pump 1 CPT Phase A
F5	FNQ-R-3-1/2	600	3-1/2A	Pump 1 CPT Phase C
F6	FNQ-10	500	10A	Pump 1 CPT Secondary
F32	AGC-6	250	6A	RVSS Control Power

Pump 2 Panel Fuse Schedule				
Fuse	Type	Voltage	Amps	Description
F7	FNQ-R-3-1/2	600	3-1/2A	Pump 2 CPT Phase A
F8	FNQ-R-3-1/2	600	3-1/2A	Pump 2 CPT Phase C
F9	FNQ-10	500	10A	Pump 2 CPT Secondary
F33	AGC-6	250	6A	RVSS Control Power

Control Panel Fuse Schedule				
Fuse	Type	Voltage	Amps	Description
F12	AGC-10	250	10A	Power Supply 1 Secondary
F13	AGC-10	250	10A	Power Supply 2 Secondary
F14	AGC-10	250	10A	Control Power
F15	AGC-10	250	10A	Batteries
F16	AGC-2	250	2A	Radio Power Supply Primary
F17	AGC-2	250	2A	Radio Power Supply Secondary
F18	AGC-1/4	250	1/4A	Pump 1 Motor Thermal
F19	AGC-1/4	250	1/4A	Pump 2 Motor Thermal
F20	AGC-1/10	250	1/10A	Operator Interface
F21	AGC-1	250	1A	Digital Inputs 0.0-1.4
F22	AGC-1	250	1A	Digital Inputs 1.5-2.7
F23	AGC-2	250	2A	Digital Outputs 0.0-0.7
F24	AGC-2	250	2A	Digital Outputs 1.0-1.7
F25	AGC-1-1/2	250	1-1/2A	PLC Power
F26	AGC-3/4	250	3/4A	Process Transmitter Supply
F27	AGC-1/10	250	1/10A	Analog Inputs
F28	AGC-1/10	250	1/10A	Analog Outputs
F29	GMA-1/4	250	1/4A	Analog Input 2
F30	GMA-1/4	250	1/4A	Analog Input 3
F31	GMA-1/4	250	1/4A	Analog Input 4

HMI BUTTON LEGEND
F1 — FAULT RESET/ENABLE INTRUSION
SHIFT+F1 — DISABLE INTRUSION
F2 — ALTERNATE PUMP ASSIGNMENTS
F3 — RESET PUMP 1 RUNTIME
SHIFT+F3 — RESET PUMP 2 RUNTIME
F4 — ALARMS SCREEN
F5 — OVERVIEW SCREEN
F6 — PUMP 1 SCREEN
F7 — PUMP 2 SCREEN
F8 — SETPOINTS SCREEN

CONTROL PANEL ISF INFORMATION TAGS

THIS AREA IN SIDE IS FOR INTRINSICALLY SAFE CIRCUITS AND DEVICES ONLY. THIS AREA INCLUDES THE SPACE BELOW THE BOTTOM OF THE BASE AREA BETWEEN THE BACKPANEL AND THE ENCLOSURE WALLS AND DOOR INCLUDING THE BOTTOM OF THE ENCLOSURE. ONLY INTRINSICALLY SAFE DEVICES AND WIRING ARE ALLOWED IN THIS AREA. DO NOT ROUTE NON-INTRINSICALLY SAFE WIRING THROUGH THE AREA OF ENCLOSURE.

WARNING

SUBSTITUTION OF COMPONENTS MAY IMPAIR INTRINSIC SAFETY

CONTROL PANEL EXTERIOR TAG INFORMATION

WARNING

TO PREVENT IGNITION OF FLAMMABLE OR COMBUSTIBLE ATMOSPHERES DISCONNECT POWER BEFORE SERVICING

PROVIDES INTRINSICALLY SAFE CIRCUITS FOR USE IN CLASS II, GROUPS A, B, C, AND D WHEN CONNECTED PER FACTORY DRAWING 24 AND NAMEPLATE LABEL

CONTROL PANEL DEADFRONT TAG INFORMATION

SECURELY FASTEN ALL INTERIOR DOOR LATCHES BEFORE CLOSING OUTER DOOR. FAILURE TO FOLLOW THESE INSTRUCTIONS COULD CAUSE THE OUTER DOOR TO JAM WHEN RE-OPENED

Nameplate Data					
Total Load (FLA)	73	99	127	155	181
Motor Hp	20	30	40	50	60
Motor FLA	27	40	52	65	77

Torque Rating Table					
	Horsepower				
Component	20	30	40	50	60
Incoming Distribution Block (PDB1)	120lb-in/13.5N-m	275lb-in/31.0N-m	275lb-in/31.0N-m	275lb-in/31.0N-m	275lb-in/31.0N-m
Main Ground Block	35lb-in/3.9N-m	35lb-in/3.9N-m	35lb-in/3.9N-m	35lb-in/3.9N-m	35lb-in/3.9N-m
Motor Distribution Block (PDB2 & 3)	40lb-in/4.5N-m	120lb-in/13.5N-m	120lb-in/13.5N-m	120lb-in/13.5N-m	120lb-in/13.5N-m
Motor Ground Block	35lb-in/4.0N-m	45lb-in/5.1N-m	45lb-in/5.1N-m	45lb-in/5.1N-m	45lb-in/5.1N-m

REVISIONS	BY

IMPROVEMENTS TO WASTEWATER COLLECTION SYSTEM

LIFT STATION CONSTRUCTION DETAILS

ELECTRICAL STANDARDS

FINAL SUBMITTAL

EMERALD COAST UTILITIES AUTHORITY

APPROVED BY:

Drawn:
Designed:
Checked:
Date: MAY '13
Scale:
Project No:
Sheet No. 15
Of 18 Sheets

ALL WORK SHALL BE CONSTRUCTED IN ACCORDANCE WITH THE LATEST EDITION OF THE E.C.U.A. STANDARD SPECIFICATIONS

REVISIONS	BY

HAZARDOUS (CLASSIFIED) LOCATION

CLASS I, ZONE 0 OR 1, GROUPS IIC, IIB, IIA or
CLASS I, DIVISION 1, GROUPS A,B,C,D
CLASS II, DIVISION 1, GROUPS E,F,G
CLASS III, DIVISION 1

NON-HAZARDOUS LOCATION

CLASS I, ZONE 2, GROUPS IIC, IIB, IIA or
CLASS I, DIVISION 2, GROUPS A,B,C,D

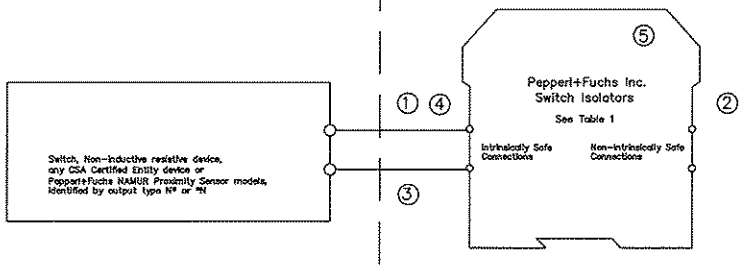

Notes:

① The intrinsically safe wiring must be installed in accordance with the Canadian Electrical Code CSA C22.1, Part 1, Appendix F.

② Barriers listed in Table 1 shall not be connected to any device that uses or generates in excess of 250Vrms or DC unless it has been determined that the voltage is adequately isolated from the barrier. Barriers listed in Table 2 shall not be connected to any device that uses or generates in excess of 60Vrms or DC unless the voltage is limited by an adequate means.

③ Any combination of up to 10 channels of the barriers listed in Table 1 or Table 2 may be connected in parallel and connected to a switch in a hazardous location.

④ The Entity concept allows interconnection of intrinsically safe apparatus with associated apparatus not specifically examined in combination as a system when the approved values of Voc and Isc for the associated apparatus are less than or equal to Vmax and Imax for the intrinsically safe apparatus and the approved values of Ca and La for the associated apparatus are greater than Ci + Ccable and Li + Lcable, respectively, for the intrinsically safe apparatus.

⑤ The following models with part number greater than 100000 are approved for mounting in a Class I, Zone 2, Groups IIC,IIB,IIA or Class I, Division 2, Groups A,B,C,D hazardous (classified) location: KF**-SR2-EX1.W, KF**-SR2-EX1.W.LB, KF**-SR2-EX2.W, KFD2-SR2-EX2.2S, KFD2-ST2-EX1.*, KFD2-ST2-EX2.*, KFD2-SOT2-EX1.*, KFD2-SOT2-EX2.*.

WARNING: Substitution of components may impair intrinsic safety and/or suitability for use in Class I, Division 2, Groups A,B,C,D or Class I, Zone 2, Groups IIC,IIB,IIA.
AVERTISSEMENT: La substitution de composants peut compromettre la sécurité intrinsèque.

No changes without prior permission
CSA
THIS DRAWING CONTAINS PROPRIETARY DATA. NO DISCLOSURE, REPRODUCTION, OR USE OF ANY PART MAY BE MADE EXCEPT BY WRITTEN PERMISSION.

Title Installation Drawing for CSA Certified Switch Isolators

In.	Date	Cons.	Resp.	Appr.	ECO No.
	2-20-2008				

Revisions

Pepperl+Fuchs® Inc. Twinsburg, OH 44087-2202 | Repl. No. – | Draw. No. 116-0047j | Sh. 1 of 2

TABLE 1: Barriers Certified to CSA Standard C22.2 No. 157 (Um = 250 V)

Model Numbers	Terminals	SYSTEM V_{max}(V)	SYSTEM Res. (Ω)	ENTITY V_{oc} (V)	ENTITY I_{sc}(mA)	ENTITY C_a(uF) GRPS A,B	ENTITY C_a(uF) GRPS C,E	ENTITY C_a(uF) GRPS D,F,G	ENTITY L_a(mH) GRPS A,B	ENTITY L_a(mH) GRPS C,E	ENTITY L_a(mH) GRPS D,F,G
KFD2-SOT-Ex1*,KFD2-SOT-Ex2* KFD2-SR-Ex1*,KFD2-SR-Ex2* KFD2-SR7-Ex1* KFD2-ST-Ex1*,KFD2-ST-Ex2* KFA5-SR2-Ex1*,KFA5..SR2-Ex2* KFA6-SR2-Ex1*,KFA6-SR2-Ex2* KFD2-SR2-Ex1*,KFD2-SR2-Ex2*	1-3, 2-3; 4-6, 5-6	12.6	650	12.9	19.8	1.273	3.820	10.18	84.88	298.7	744.4
KFA5-SOT2-Ex1*,KFA5-SOT2-Ex2* KFA6-SOT2-Ex1*,KFA6-SOT2-Ex2*	1-3, 2-3; 4-6, 5-6	10.5	811	10.5	13.0	2.66	7.9	21.3	192	671	1000

TABLE 2: Barriers Certified to CSA Standard E79-11 (Um = 60 V)

Model Numbers	Terminals	Load Parameters U_o (V_{oc})	I_o (I_{sc})	C_o(uF) GRPS IIC (A,B)	C_o(uF) GRPS IIB (C,E)	C_o(uF) GRPS IIA (D,F,G)	L_o(mH) GRPS IIC (A,B)	L_o(mH) GRPS IIB (C,E)	L_o(mH) GRPS IIA (D,F,G)
KFD2-SOT2-Ex1*,KFD2-SOT2-Ex2* KFD2-ST2-Ex1*,KFD2-ST2-Ex2*	1-3, 2-3; 4-6, 5-6	10.5	13.0	2.66	7.9	21.3	192	671	1000

No changes without prior permission
CSA
THIS DRAWING CONTAINS PROPRIETARY DATA. NO DISCLOSURE, REPRODUCTION, OR USE OF ANY PART MAY BE MADE EXCEPT BY WRITTEN PERMISSION.

Title Installation Drawing for CSA Certified Switch Isolators

In.	Date	Cons.	Resp.	Appr.	ECO No.
	2-20-2008				

Revisions

Pepperl+Fuchs® Inc. Twinsburg, OH 44087-2202 | Repl. No. – | Draw. No. 116-0047j | Sh. 2 of 2

IMPROVEMENTS TO WASTEWATER COLLECTION SYSTEM
LIFT STATION CONSTRUCTION DETAILS
ELECTRICAL STANDARDS
FINAL SUBMITTAL

EMERALD COAST UTILITIES AUTHORITY

APPROVED BY:

Drawn:
Designed:
Checked:
Date: MAY '13
Scale:
Project No:
Sheet No. 16
OF 18 Sheets

GENERAL ELECTRICAL NOTES

NEW WORK:

1. ENTIRE ELECTRICAL INSTALLATION SHALL BE IN ACCORDANCE WITH THE LATEST EDITION (UNLESS NOTED OTHERWISE) OF THE FOLLOWING CODES AND STANDARDS:
   1.1. NATIONAL ELECTRICAL CODE (NFPA 70).
   1.2. STANDARD FOR FIRE PROTECTION IN WASTEWATER TREATMENT AND COLLECTION FACILITIES (NFPA 820).
2. THE CONTRACTOR SHALL BE RESPONSIBLE FOR READING ALL PROJECT SPECIFICATIONS AND WILL BE RESPONSIBLE FOR MEETING ALL REQUIREMENTS OUTLINED IN THE SPECIFICATIONS.
3. CONTRACTOR SHALL COORDINATE ALL WORK WITH OTHER TRADES PRIOR TO ROUGH-IN AND INSTALLATION.
4. WORKING SPACE FOR ALL ELECTRICAL AND CONTROL EQUIPMENT OPERATING AT 600V VOLTS OR LESS TO GROUND AND LIKELY TO REQUIRE EXAMINATION, ADJUSTMENT, SERVICING, OR MAINTENANCE WHILE ENERGIZED SHALL COMPLY WITH NEC, ARTICLE 110.26.
5. THE ELECTRICAL DESIGN PROVIDES A NUMBER OF BRANCH CIRCUITS, AMPACITY AND OVERCURRENT PROTECTION FOR OTHER DIVISIONS DESIGN BASIS EQUIPMENT CONFORMING TO MANUFACTURER'S SPECIFICATIONS AVAILABLE AT TIME OF DESIGN. THE CONTRACTOR SHALL VERIFY ALL EQUIPMENT LOADS PRIOR TO ROUGH-IN. IF REQUIREMENTS OF EQUIPMENT ACTUALLY PROVIDED UNDER CONTRACT FOR CONSTRUCTION ARE DIFFERENT, CONTRACTOR SHALL MAKE ALL CHANGES NECESSARY WITHOUT INCREASE IN THE CONTRACT AMOUNT. SUCH CHANGES SHALL BE BASED UPON REQUIREMENTS, NAMEPLATE VALUES AND CODE REQUIREMENTS, WHICHEVER IS MORE STRINGENT, AND MAY INCLUDE, BUT ARE NOT LIMITED TO: SIZE OF CONDUCTORS, SIZE OF CONDUIT, QUANTITY OF CONDUCTORS AND CONDUITS, TYPE AND SIZE OF CIRCUIT BREAKER OR DISCONNECT, OVERLOADS, FULL-VOLTAGE STARTERS, REDUCED VOLTAGE SOFT STARTERS, VARIABLE FREQUENCY DRIVES, AND FUSE PROTECTION.
6. THE ELECTRICAL CONTRACTOR IS REQUIRED TO COORDINATE, PROVIDE, AND INSTALL A FULLY OPERATIONAL AND CODE COMPLIANT ELECTRICAL SYSTEM. THIS MAY INCLUDE THE ADDITION OF ELECTRICAL ITEMS NOT SHOWN ON THE ELECTRICAL PLANS, BUT REQUIRED FOR SYSTEM OPERATION.
7. CONTRACTOR SHALL COORDINATE INSTALLATION OF ELECTRICAL SERVICE WITH ELECTRICAL UTILITY COMPANY PROVIDING ELECTRICAL SERVICE TO FACILITY. CONTRACTOR SHALL PAY ALL FEES ASSESSED BY ELECTRICAL UTILITY COMPANY TO PROVIDE ELECTRICAL SERVICE TO FACILITY.
8. CONTRACTOR SHALL EXCAVATE AND CONDUCT DEMOLITION SO AS TO AVOID DAMAGE TO EXISTING UTILITIES AND OTHER UNDERGROUND OR CONCEALED ITEMS. IF EXISTING OR NEW ITEMS ARE DAMAGED, THE CONTRACTOR SHALL NOTIFY THE OWNER AT ONCE OF ALL DAMAGE AND SHALL REPAIR (OR REPLACE IF NECESSARY) TO THE ORIGINAL CONDITION TO THE SATISFACTION OF OWNER AND ENGINEER AT NO CHARGE IN THE CONTRACT AMOUNT.
9. THE CONTRACTOR SHALL BE RESPONSIBLE FOR PROVIDING DETAILED ELECTRICAL AND CONTROL EQUIPMENT LAYOUT DRAWINGS TO THE ENGINEER AND OWNER FOR APPROVAL PRIOR TO INSTALLATION.
10. ALL CONDUITS NOT LOCATED UNDER SLAB SHALL HAVE A MINIMUM BURIAL DEPTH OF 42", UNLESS NOTED OTHERWISE.
11. CONDUITS SHALL BE BURIED 42" (MINIMUM) BELOW GRADE WITH MARKER TAPE 6" ABOVE TOP OF CONDUIT, UNLESS NOTED OTHERWISE.
12. MINIMUM SIZE CONDUIT SHALL BE 1" (UNLESS NOTED OTHERWISE).
13. CONDUIT ROUTINGS AND DEVICE/EQUIPMENT LOCATIONS SHOWN ARE DIAGRAMMATIC ONLY. CONTRACTOR SHALL FIELD ROUTE AND LOCATE AS REQUIRED.
14. CONTRACTOR SHALL PROVIDE PULL BOXES IN POWER CIRCUIT CONDUIT AS REQUIRED TO LIMIT THE NUMBER OF BENDS TO A MAXIMUM OF 270° OR THREE 90° BENDS.
15. ALL WIRE SHALL BE COPPER.
16. ALL ELECTRICAL CIRCUITS SHALL INCLUDE A GREEN GROUNDING CONDUCTOR SIZED PER NEC.
17. CONDUCTORS SHALL BE TERMINATED ON TERMINAL BLOCKS.
18. THE CONTRACTOR SHALL TAG ALL POWER AND CONTROL SYSTEM CABLING AT ALL TERMINATION POINTS.
19. FINAL CONNECTION TO ALL EQUIPMENT IS SHOWN DIAGRAMMATIC. PROVIDE FINAL CONNECTION AS REQUIRED PER MANUFACTURER OF EQUIPMENT.
20. CONTRACTOR SHALL MAINTAIN A SET OF PRINTS AND MARK-UP DURING CONSTRUCTION TO REFLECT "AS-BUILT" CONDITIONS. PRINTS SHALL BE DELIVERED TO THE ENGINEER UPON COMPLETION OF THE PROJECT.
21. ALL HARDWARE SHALL BE STAINLESS STEEL.
22. ALUMINUM CONDUIT SHALL BE COATED WITH (2) WRAPS OF ANTI-CORROSION TAPE OR RUN THROUGH A SCHEDULE 80 PVC SLEEVE TO WHEN IN CONTACT WITH CONCRETE.
23. BARE COPPER SHALL BE COATED WITH (2) WRAPS OF ANTI-CORROSION TAPE OR RUN THROUGH A SCHEDULE 80 PVC SLEEVE TO WHEN IN CONTACT WITH CONCRETE.
24. ENGINEER OF RECORD SHALL BE RESPONSIBLE FOR FINAL SIZING OF ALL EQUIPMENT.

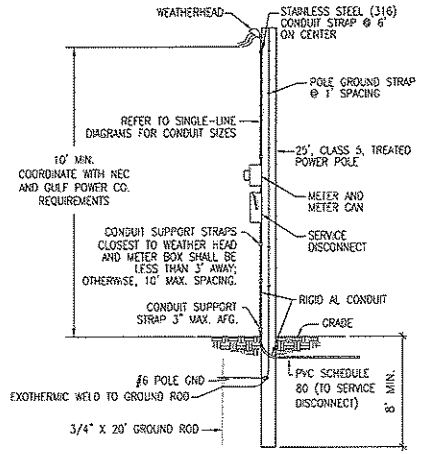

SERVICE LATERAL CONDUIT SHALL BE 3" (MIN) SCHEDULE 80 PVC BELOW GRADE AND 3" (MIN) RIGID AL CONDUIT ABOVE GRADE. ANY REQUIREMENTS BY THE UTILITY COMPANY SHALL PREVAIL OVER THE REQUIREMENTS OUTLINED HERE AND SHALL BE COORDINATED BY THE ELECTRICAL CONTRACTOR PRIOR TO INSTALLATION.

A3 UTILITY POLE DETAIL
NOT TO SCALE

ALL WORK SHALL BE CONSTRUCTED IN ACCORDANCE WITH THE LATEST EDITION OF THE E.C.U.A. STANDARD SPECIFICATIONS

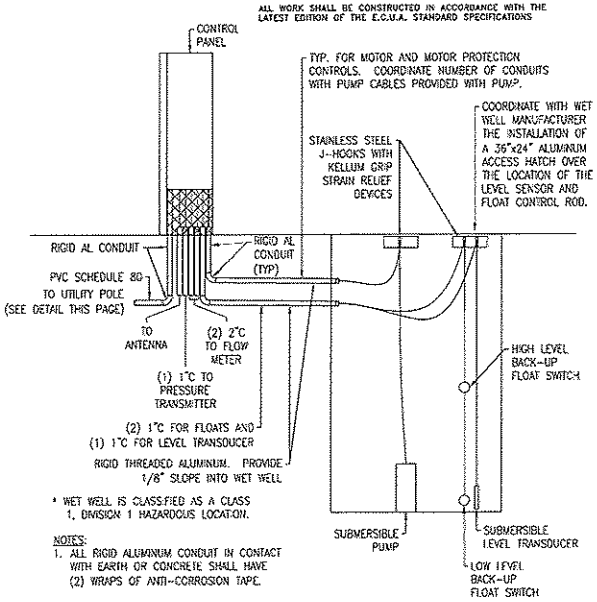

* WET WELL IS CLASSIFIED AS A CLASS 1, DIVISION 1 HAZARDOUS LOCATION.

NOTES:
1. ALL RIGID ALUMINUM CONDUIT IN CONTACT WITH EARTH OR CONCRETE SHALL HAVE (2) WRAPS OF ANTI-CORROSION TAPE.

B4 TYPICAL WET WELL SECTION DETAIL
NOT TO SCALE

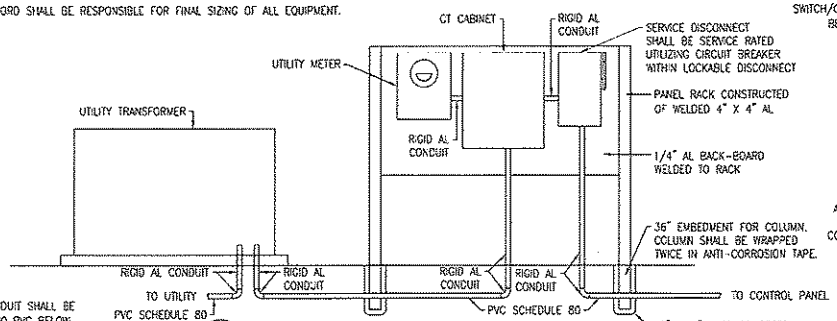

* SERVICE LATERAL CONDUIT SHALL BE 3" (MIN) SCHEDULE 80 PVC BELOW GRADE AND 3" (MIN) RIGID ALUMINUM CONDUIT ABOVE GRADE.

A1 PAD MOUNTED TRANSFORMER UTILITY DETAIL
NOT TO SCALE

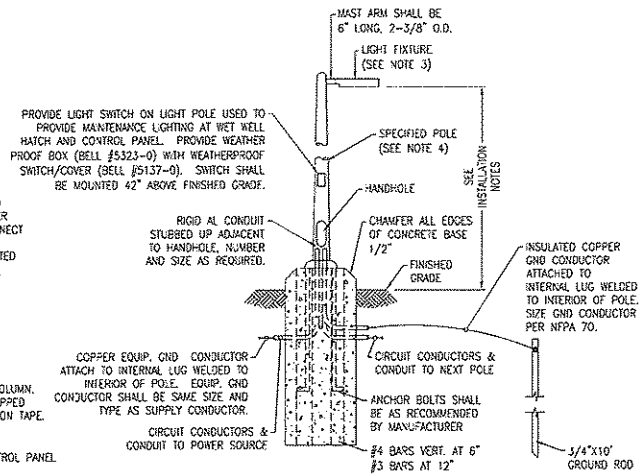

A4 LIGHT POLE INSTALLATION DETAIL
NOT TO SCALE

LIGHTING PERFORMANCE CRITERIA:
1. LIGHTING FIXTURE LAYOUT SHALL BE BASED UPON ACHIEVING 20 FOOT CANDLES (+/- 20%) AT THE FRONT OF THE CONTROL PANEL (WORK-PLANE OF 24" AFG) AND AT THE WET WELL ACCESS HATCH (WORKPLANE OF 0" AFG).
2. GENERAL SECURITY LIGHTING SHALL ENCOMPASS ACCESS GATE AND ALL PIPING/EQUIPMENT AT A MIN: AVERAGE 1 FOOT-CANDLE (+/- 20%, AT WORKPLANE OF 0" AFG).
3. REFER TO LIGHTING CONTROL DIAGRAM ON SHEET No. 18 FOR ADDITIONAL REQUIREMENTS.

LIGHT POLE INSTALLATION NOTES:
1. BURIAL AND DIAMETER DIMENSIONS INDICATED ARE FOR NOMINAL MINIMAL SIZES ONLY. FINAL DIMENSIONS SHALL BE DETERMINED BY A REGISTERED STRUCTURAL ENGINEER IN THE STATE OF FLORIDA. BASED UPON FIXTURES PROVIDED. PROVIDE SIGNED, DATED, AND SEALED PLANS FOR EACH INSTALLATION TYPE AND FIXTURE TYPE AS PART OF LIGHTING SUBMITTAL PACKAGE.
2. THE POLE AND FOUNDATION DESIGN SHALL BE BY A DELEGATED PROFESSIONAL ENGINEER TO MEET THE FOLLOWING CRITERIA:
   2.1. DESIGN WIND SPEED 160 MPH WITH A 1.3 GUST FACTOR. EXPOSURE CATEGORY C.
   2.2. SIZE EMBEDMENT FOR A MAXIMUM PERMANENT POLE DEFLECTION AFTER DESIGN WIND SPEED EVENT OF 1.00".
   2.3. ALUMINUM, ROUND OR SQUARE, TAPERED.
3. FIXTURE SHALL BE AMERICAN ELECTRIC LIGHTING AT82 FIXTURE, 40 LED, 1000mA DRIVER, 120V, TYPE 4, WITH PHOTOCONTROL.
4. REFER TO SPECIFICATIONS SECTION 16521 "EXTERIOR LIGHTING" FOR ADDITIONAL REQUIREMENTS.
5. LIGHT FIXTURES SHALL BE MOUNTED AT 15'-0" (MAXIMUM) ABOVE FINISHED GRADE.

REVISIONS	BY

IMPROVEMENTS TO WASTEWATER COLLECTION SYSTEM

LIFT STATION CONSTRUCTION DETAILS

ELECTRICAL STANDARDS

FINAL SUBMITTAL

ECUA EMERALD COAST UTILITIES AUTHORITY

APPROVED BY:

Drawn:
Designed:
Checked:
Date: MAY '13
Scale:
Project No:
Sheet No. 17
Of 18 Sheets

ALL WORK SHALL BE CONSTRUCTED IN ACCORDANCE WITH THE LATEST EDITION OF THE E.C.U.A. STANDARD SPECIFICATIONS

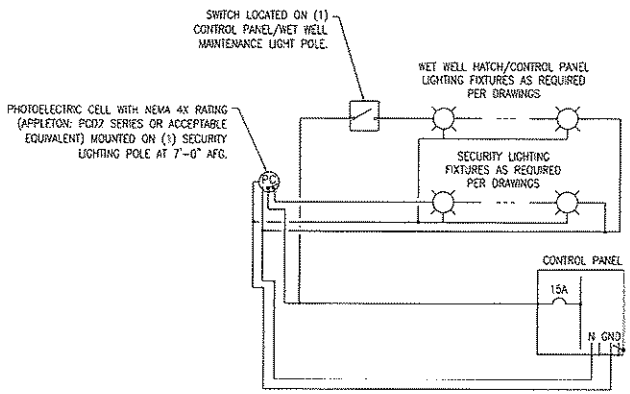

C2 TYPICAL LIGHTING CONTROL DIAGRAM
NOT TO SCALE

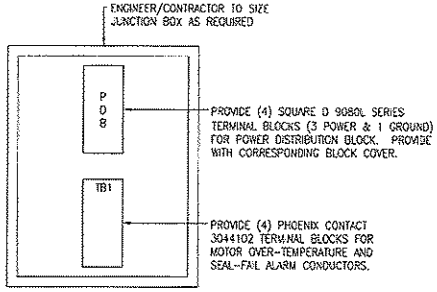

INTERIOR ELEVATION

DETAIL NOTES:

1. ALL TERMINAL BLOCKS SHALL BE PROVIDED WITH CORRESPONDING END BRACKETS AND END COVERS.
2. PROVIDE SEPARATE GROUND LUG IN EACH JUNCTION BOX, BONDED TO JUNCTION BOX.

A1 TYPICAL PUMP JUNCTION BOX ELEVATION
NOT TO SCALE

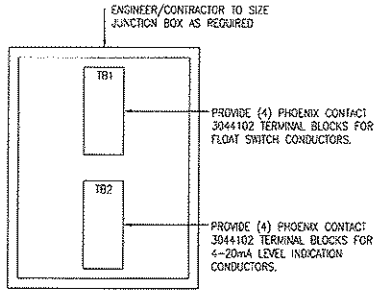

INTERIOR ELEVATION

DETAIL NOTES:

1. ALL TERMINAL BLOCKS SHALL BE PROVIDED WITH CORRESPONDING END BRACKETS AND END COVERS.
2. PROVIDE SEPARATE GROUND LUG IN EACH JUNCTION BOX, BONDED TO JUNCTION BOX.

A3 TYPICAL LEVEL INDICATION JUNCTION BOX ELEVATION
NOT TO SCALE

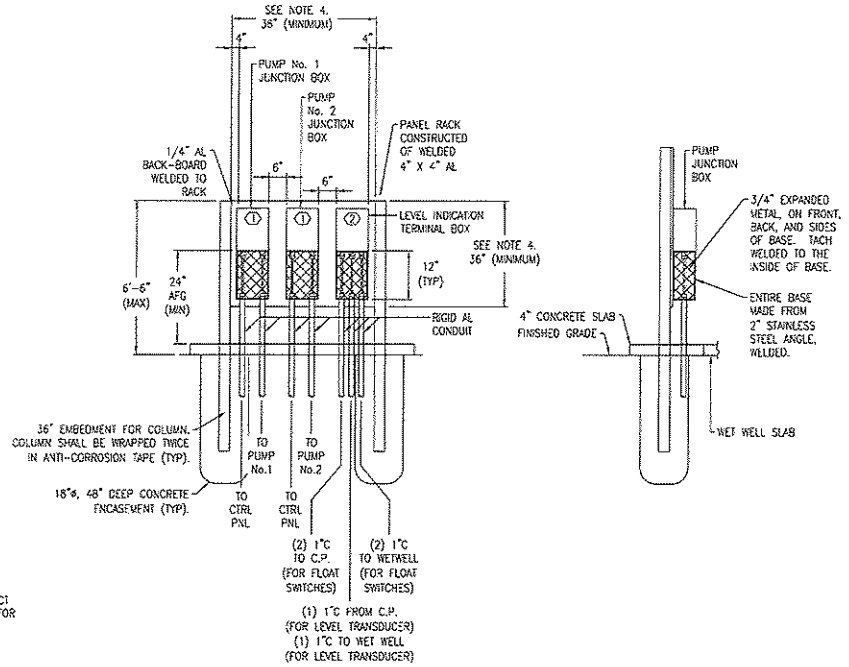

FRONT ELEVATION

SIDE ELEVATION

DETAIL NOTES:

1. THIS DETAIL SHALL ONLY APPLY WHEN THE CONTROL PANEL CANNOT BE PLACED WITHIN 6'-0" OF THE WET WELL TO ALLOW FOR CONNECTION OF STANDARD 50 FOOT PUMP CABLE CONNECTIONS.
2. BACKBOARD SHALL BE PLACED AT THE EDGE OF THE WET WELL SLAB BETWEEN THE WET WELL AND CONTROL PANEL.
3. JUNCTION BOXES SHALL BE MOUNTED SUCH THAT THEY ARE FACING THE WET WELL.
4. ENGINEER/CONTRACTOR SHALL SIZE JUNCTION BOXES AND BACKBOARDS BASED UPON INSTALLATION REQUIREMENTS PROVIDED AT TIME OF DESIGN.

KEY NOTES

1. REFER TO "TYPICAL PUMP JUNCTION BOX ELEVATION" (THIS SHEET) FOR ADDITIONAL REQUIREMENTS.
2. REFER TO "TYPICAL LEVEL INDICATION JUNCTION BOX ELEVATION" (THIS SHEET) FOR ADDITIONAL REQUIREMENTS.

A4 TYPICAL PUMP JUNCTION BOXES
NOT TO SCALE

REVISIONS	BY

IMPROVEMENTS TO WASTEWATER COLLECTION SYSTEM

LIFT STATION CONSTRUCTION DETAILS

ELECTRICAL STANDARDS

FINAL SUBMITTAL

EMERALD COAST UTILITIES AUTHORITY

APPROVED BY:

Drawn:	
Designed:	
Checked:	
Date:	MAY '13
Scale:	
Project No:	
Sheet No.	18
	OF 18 Sheets

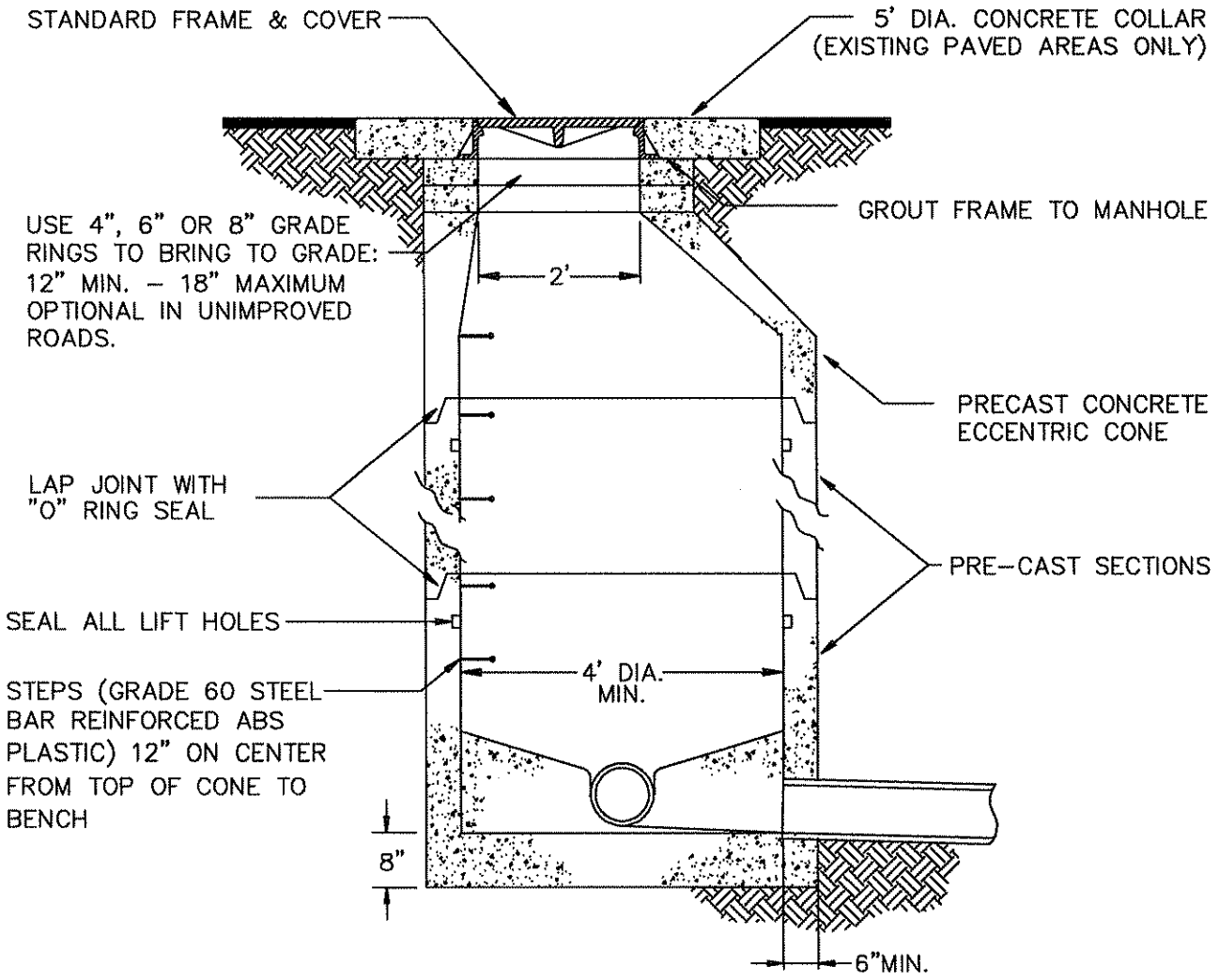

NOTE:

SEE SECTION 2570 FOR COMPLETE SPECIFICATIONS

STANDARD MANHOLE DETAIL

N.T.S.

D–1

DETAIL

DATE: 10–2–97

REV: 6–1–99

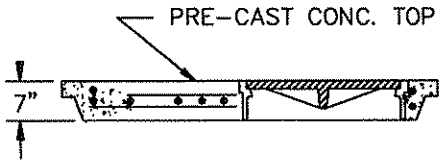

ALTERNATE TOP WITH INVERTED RING

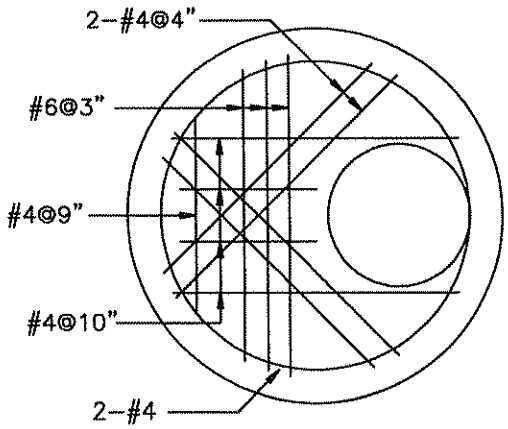

TOP REINFORCING

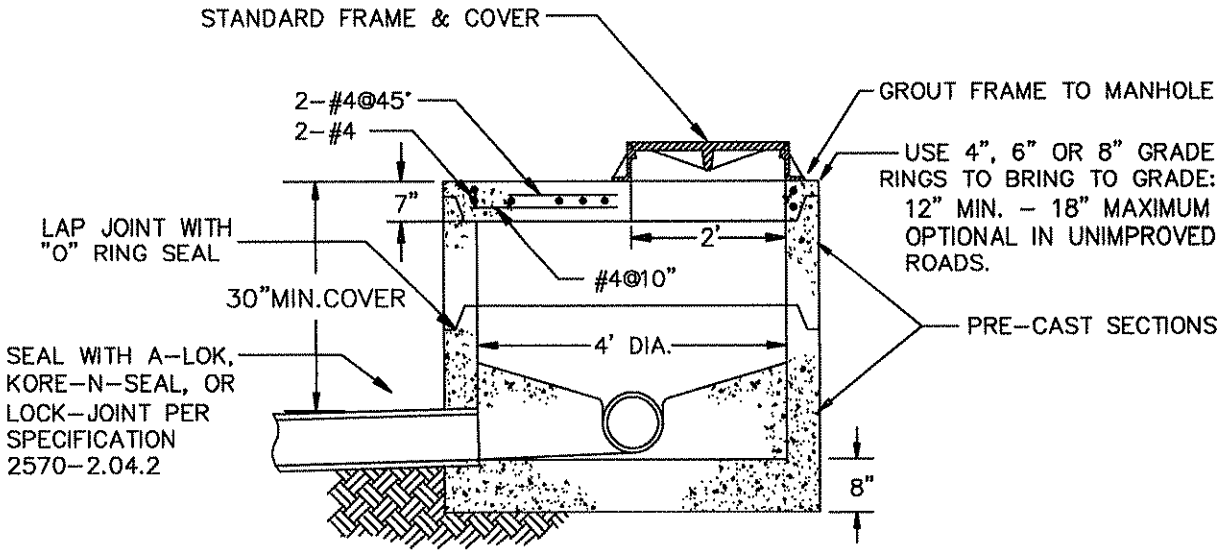

SHALLOW MANHOLE DETAIL

N.T.S.

D-2

DETAIL

DATE: 9-8-95

REV: 6-1-99

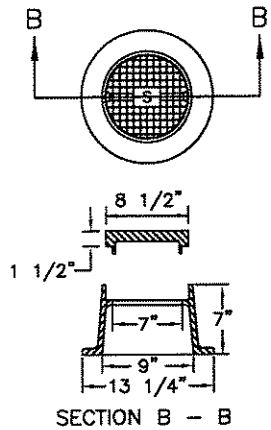

LAMPHOLE FRAME AND COVER

NOTES:

1. FRAME AND COVER SHALL BE VULCAN MODEL VM 37, OR U.S. FOUNDARY USF170E, BOLTING FEATURES NOT REQUIRED. MODEL VM 360–WT, FOR BOLTED COVERS, MODEL VM 50 FOR FLOOD AREAS, OR APPROVED EQUIVALENTS, REFER TO SPECIFICATIONS.
2. FRAME AND COVER SHALL CONFORM TO ASTM SPEC. A–48, CLASS 30 CAST IRON.
3. MANHOLE COVER IS TO BE NON–VENTING, EXCEPT WHEN USED ON A RECEIVING MANHOLE FOR A FORCE MAIN, A MANHOLE THAT HAS A DROP MAIN OR LATERAL ENTERING IT, OR A MANHOLE THAT HOUSES AN ARV (SEE DETAIL D–61).

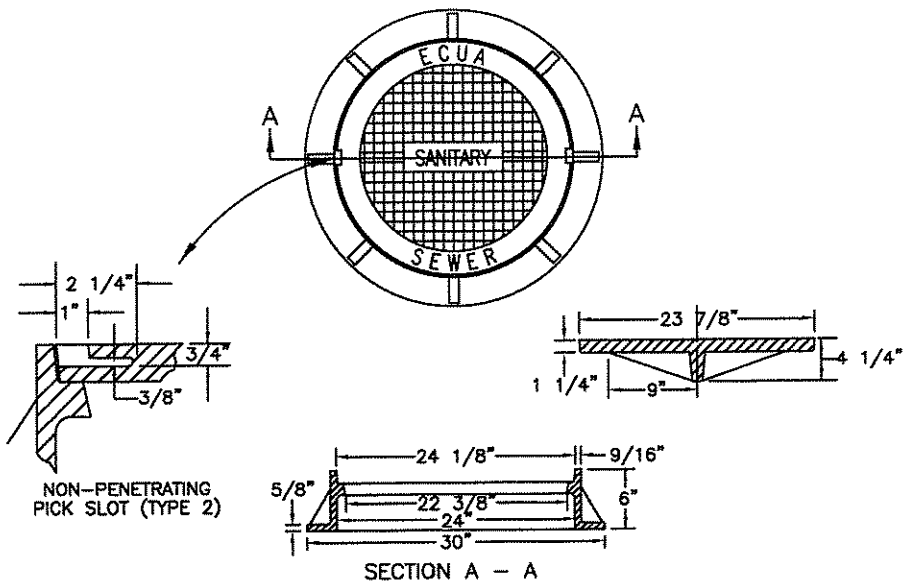

MANHOLE FRAME & COVER

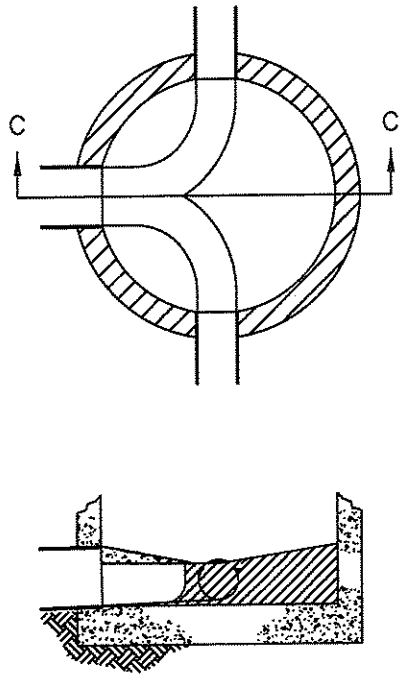

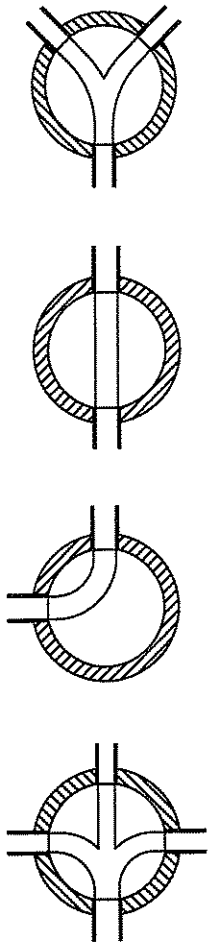

INVERT CHANNELS

EMERALD COAST UTILITIES AUTHORITY

TYPICAL MANHOLE DETAILS

N.T.S.

DATE: 11/87

REV: 6–1–99

D–4

DETAIL

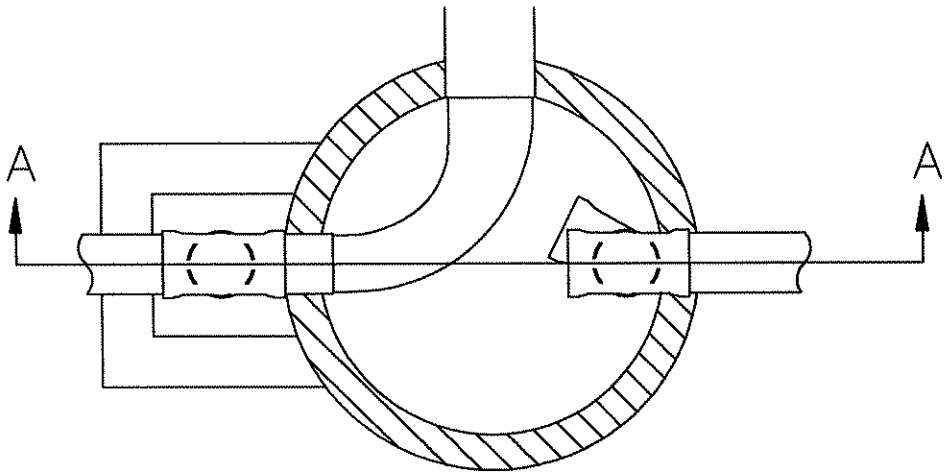

NOTE:
REFER TO SPECIFICATIONS AND DETAILS D-1 &
D-4 FOR NOTES PERTAINING TO MANHOLE CONSTRUCTION.

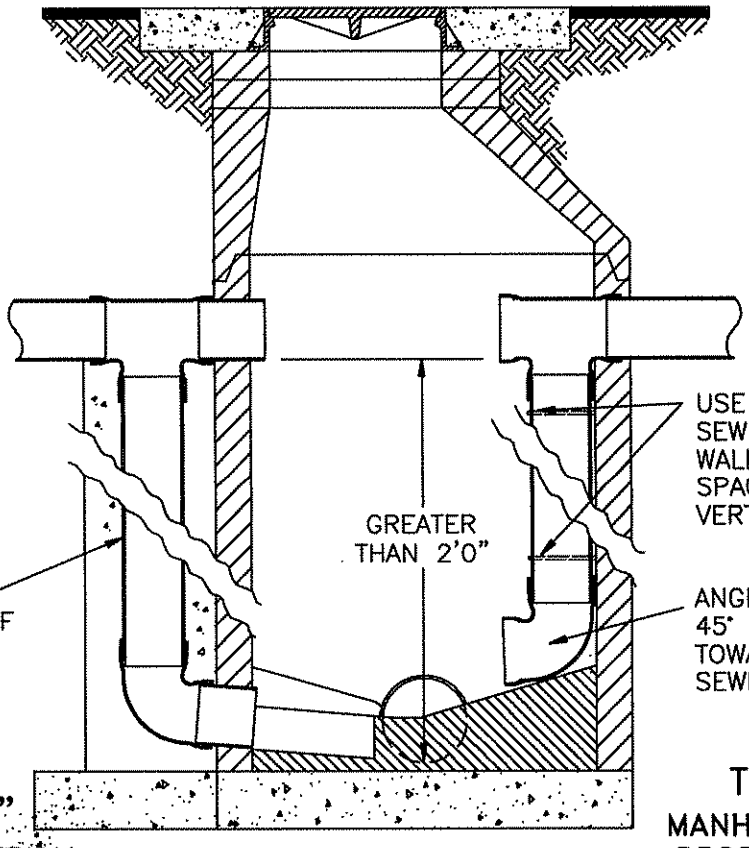

TYPE "A"
MANHOLE-EXTERNAL DROP CONNECTION

TYPE "B"
MANHOLE-INTERNAL DROP CONNECTION (BUILDING SERVICE & LATERALS ONLY)

SECTION A-A

EMERALD COAST UTILITIES AUTHORITY	DROP MANHOLE CONNECTIONS	D-6
DATE: 10/12/95	N.T.S. REV: 5/99	DETAIL

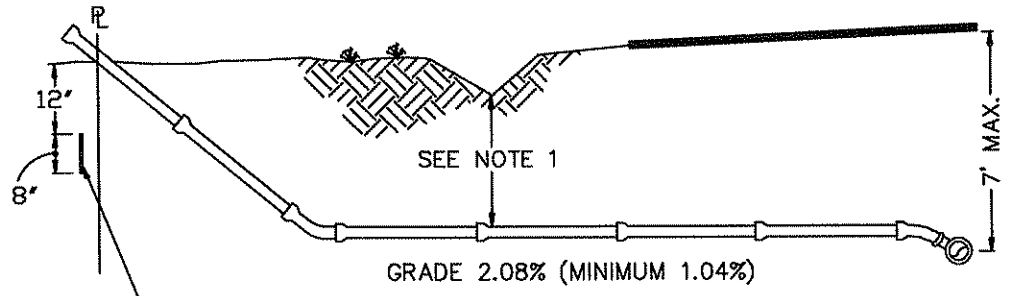

WYE BRANCH (TYP.)

1/2" THICK METAL REBAR ADJACENT TO EACH SERVICE CONNECTION

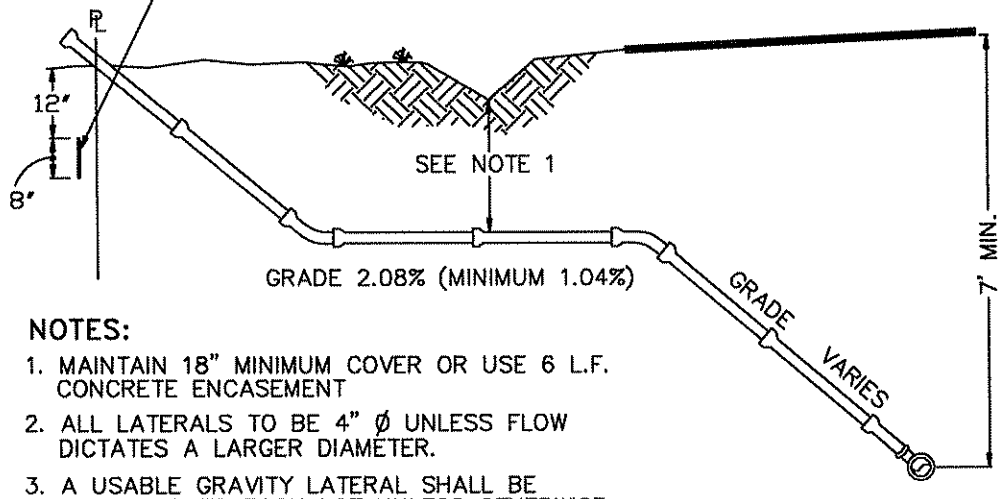

NOTES:

1. MAINTAIN 18" MINIMUM COVER OR USE 6 L.F. CONCRETE ENCASEMENT
2. ALL LATERALS TO BE 4" Ø UNLESS FLOW DICTATES A LARGER DIAMETER.
3. A USABLE GRAVITY LATERAL SHALL BE AVAILABLE TO EACH LOT UNLESS OTHERWISE INDICATED ON CONSTRUCTION PLANS.
4. A CLEAN OUT SHALL BE PROVIDED AT THE PROPERTY LINE FOR ALL 4-INCH AND 6-INCH LATERALS.

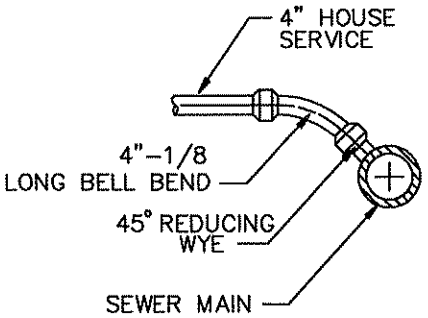

SECTION

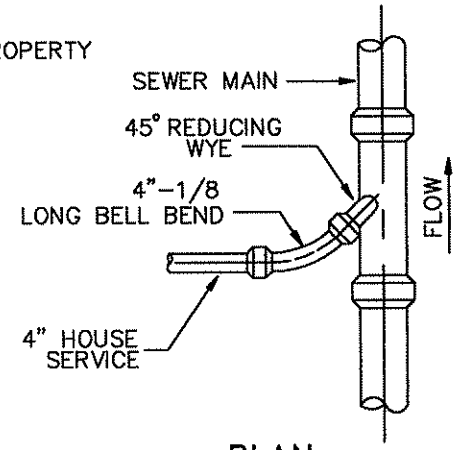

PLAN

TYPICAL LATERAL SEWER CONNECTION

N.T.S.

D-7

DATE: 9-26-95

REV: 5/99

DETAIL

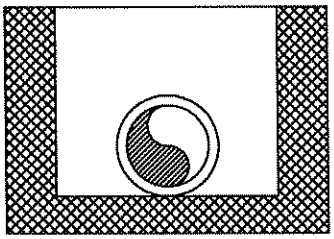

TYPE 1

FLAT–BOTTOM* TRENCH, LOOSE EMBEDMENT
E = 50 psi (340 kPa). K = 0.110

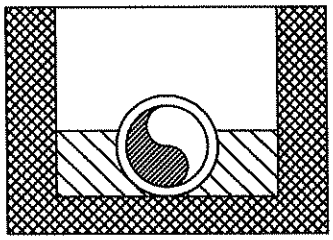

TYPE 2

FLAT–BOTTOM* TRENCH, EMBEDMENT LIGHTLY CONSOLIDATED TO CENTERLINE OF PIPE.
E = 200 psi (1,380 kPa). K = 0.110

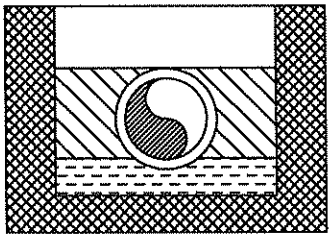

TYPE 3

PIPE BEDDED ON 4" (100 mm) MINIMUM OF LOOSE SOIL.** EMBEDMENT LIGHTLY CONSOLIDATED TO TOP OF PIPE.
E = 400 psi (2,760 kPa). K = 0.102

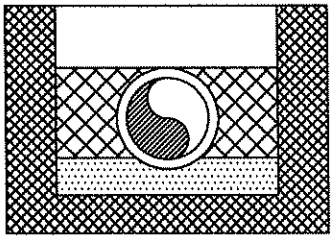

TYPE 4

PIPE BEDDED ON SAND, GRAVEL OR CRUSHED STONE TO DEPTH OF 1/8 PIPE DIAMETER, 4" (100 mm) MINIMUM. EMBEDMENT COMPACTED TO TOP OF PIPE.(APPROXIMATELY 80% STANDARD PROCTOR. AASHTO T–99 OR ASTM D 698)
E = 1,000 psi (6,900 kPa). K = 0.096

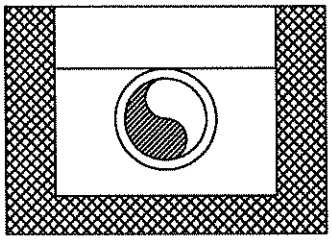

TYPE 5

PIPE ENBEDDED IN COMPACTED GRANULAR MATERIAL TO CENTERLINE OF PIPE. COMPACTED GRANULAR OR SELECT MATERIAL TO TOP OF PIPE. (APPROXIMATELY 90% STANDARD PROCTOR. AASHTO T–99 OR ASTM D 698)
E = 2,000 psi (13,800 kPa). K = 0.083

NOTE: REQUIRED EMBEDMENT TYPE WILL DEPEND ON THE PIPE'S DIMENSION RATIO, INTERNAL OPERATIING PRESSURE, AND EXTERNAL LOAD, AND SHALL BE SPECIFIED BY THE PURCHASER.(SEE SEC. 5.3)

* "FLAT–BOTTOM" IS DEFINED AS UNDISTURBED EARTH.
** "LOOSE SOIL" OR "SELECT MATERIAL" IS DEFINED AS NATIVE SOIL EXCAVATED FROM THE TRENCH, FREE OF ROCKS FOREIGN MATERIAL, AND FROZEN EARTH. A SOFT "LOOSE SOIL" BEDDING WILL CONTOUR TO THE PIPE BOTTOM. CAUTION MUST BE EXERCISED TO ENSURE PROPER PLACEMENT OF EMBEDMENT MATERIAL UNDER THE HAUNCHES OF THE PIPE.

From AWWA C.605
UNDERGROUND INSTALLATION OF PVC PIPE

EMERALD COAST UTILITIES AUTHORITY

PIPE ENVELOPE REQUIREMENTS

N.T.S.

D–10

DATE: 7–19–95

REV:

DETAIL

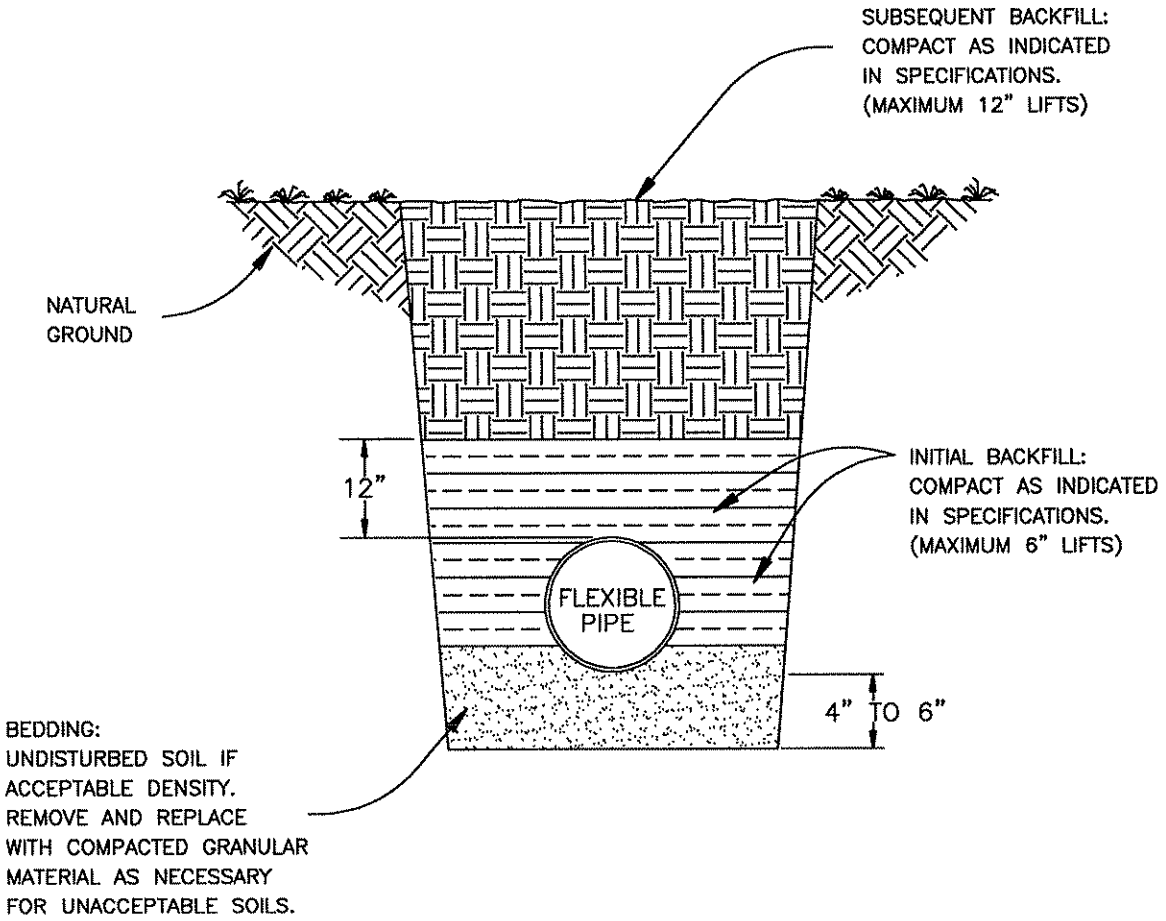

FLEXIBLE PIPE BEDDING

D-11

DATE: 7-26-95

N.T.S.

REV:

DETAIL

NOTES:

1. NEW PIPE SHALL BE CAPPED OR PLUGGED FOR PRESSURE TEST. ONCE TEST IS SATISFACTORILY COMPLETED NEW MAIN IS TO BE CONNECTED TO EXISTING MAIN IN A MANNER ACCEPTABLE TO E. C. U. A.
2. THE CONTRACTOR SHALL FLUSH LINE PRIOR TO STARTING THE CHLORINATION PROCEDURE. ALL FLUSHING SHALL BE DONE THROUGH THE EXISTING VALVE WITH ALL HYDRANTS AND SERVICE LINES OPEN. E.C.U.A. INSPECTOR SHALL BE THE ONLY PERSON ALLOWED TO OPERATE THE VALVE AND SHALL BE PRESENT DURING FLUSHING OPERATION. ONCE FLUSHING IS COMPLETE THE INSPECTOR SHALL CLOSE THE VALVE.
3. ONCE SATISFACTORY BACTERIOLOGICAL SAMPLES ARE OBTAINED THE CONTRACTOR SHALL CLOSE BOTH CORPORATION STOPS AND REMOVE SERVICE TUBING, PUMP AND BACK FLOW PREVENTER; CAP CORPORATION STOPS WITH BRASS CAPS.
4. CONTRACTOR SHALL FURNISH ALL MATERIALS, EQUIPMENT AND LABOR NECESSARY FOR FILLING, CHLORINATING AND TESTING PROCEDURES. CONTRACTOR SHALL PROVIDE SAMPLING TAPS AT THOSE LOCATIONS APPROVED BY THE E.C.U.A. INSPECTOR. E.C.U.A. SHALL COLLECT TEST SAMPLES.
5. IF 20' STUB OUT IS NOT PRESENT SPECIAL ARRANGEMENTS WILL HAVE TO BE MADE TO DEPRESSURIZE THE EXISTING MAIN TO MAKE CONNECTION TO THE EXISTING VALVE.

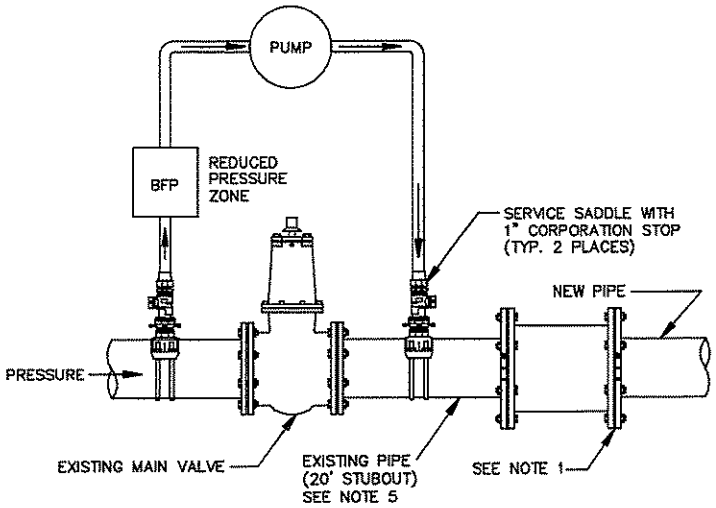

TYPICAL CONNECTION FOR NEW LINE FILLING, PRESSURE TESTING, FLUSHING AND CHLORINATION. (EXISTING STUBOUT)

NOTES:

1. NEW PIPE SHALL BE CAPPED OR PLUGGED FOR PRESSURE TEST. ONCE TEST IS SATISFACTORILY COMPLETED NEW MAIN IS TO BE CONNECTED TO TAPPING VALVE. TAPPING VALVE IS TO REMAIN CLOSED.
2. THE CONTRACTOR SHALL FLUSH LINE PRIOR TO STARTING THE CHLORINATION PROCEDURE. ALL FLUSHING SHALL BE DONE THROUGH THE TAPPING VALVE WITH ALL HYDRANTS AND SERVICE LINES OPEN. E.C.U.A. INSPECTOR SHALL BE THE ONLY PERSON ALLOWED TO OPERATE THE VALVE AND SHALL BE PRESENT DURING FLUSHING OPERATION. ONCE FLUSHING IS COMPLETE THE INSPECTOR SHALL CLOSE THE VALVE.
3. ONCE SATISFACTORY BACTERIOLOGICAL SAMPLES ARE OBTAINED THE CONTRACTOR SHALL CLOSE BOTH CORPORATION STOPS AND REMOVE SERVICE TUBING, PUMP AND BACK FLOW PREVENTER; CAP CORPORATION STOPS WITH BRASS CAPS.
4. CONTRACTOR SHALL FURNISH ALL MATERIALS, EQUIPMENT AND LABOR NECESSARY FOR FILLING, CHLORINATING AND TESTING PROCEDURES. CONTRACTOR SHALL PROVIDE SAMPLING TAPS AT THOSE LOCATIONS APPROVED BY THE E.C.U.A. INSPECTOR. E.C.U.A. SHALL COLLECT TEST SAMPLES.

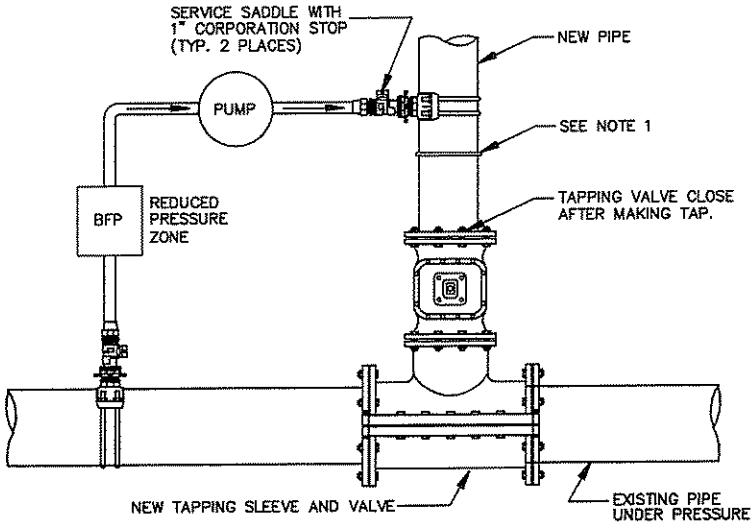

TYPICAL CONNECTION FOR NEW LINE FILLING, PRESSURE TESTING, FLUSHING AND CHLORINATION. (TAPPING SLEEVE AND VALVE)

EMERALD COAST UTILITIES AUTHORITY

TYPICAL DISINFECTION & CHLORINATION

N.T.S.

DATE: 7-19-95

REV:

D-12

DETAIL

CHLORINE REQUIRED FOR STERILIZATION

PIPE SIZE	SPECIFICATION	I.D. INCHES	GALLS/100'	CHLORINE REQUIRED PER 100' FOR 25ppm	CHLORINE REQUIRED PER 100' FOR 50ppm
2'	D2241 DR26	2.193	20	0.10 oz.	0.20 oz.
3"	D2241 DR26	3.230	43	0.22 oz.	0.44 oz.
4"	C-900 DR18	4.230	73	0.37 oz.	0.75 oz.
	C-900 DR25	4.390	79	0.40 oz.	0.81 oz.
6"	C-900 DR18	6.090	151	0.78 oz.	1.55 oz.
	C-900 DR25	6.300	162	0.83 oz.	1.66 oz.
8"	C-900 DR18	7.980	260	1.33 oz.	2.67 oz.
	C-900 DR25	8.280	280	1.44 oz.	2.87 oz.
12"	C-900 DR18	11.650	554	2.84 oz.	5.69 oz.
	C-900 DR25	12.080	595	3.06 oz.	6.12 oz.
16"	C-905 DR18	15.470	977	5.01 oz.	10.03 oz.
	C-905 DR25	16.010	1,046	5.37 oz.	10.74 oz.
20"	C-905 DR18	19.200	1,504	7.72 oz.	15.45 oz.
	C-905 DR25	19.870	1,611	8.27 oz.	16.55 oz.
24"	C-905 DR18	N/A	N/A	N/A	N/A
	C-905 DR25	23.742	2,300	11.81 oz.	23.62 oz.

NOTE :
- 16", 20" AND 24" PIPE SIZES ARE C.I.O.D.
- FOR HTH WITH 65% AVAILABLE CHLORINE
- 1 US GALLON WEIGHS 8.345 #
- APPROX. 1 oz./100 gal FOR 50 ppm
- APPROX. 0.5 oz./100 gal FOR 25 ppm

EMERALD COAST UTILITIES AUTHORITY

CHLORINE REQUIRED FOR STERILIZATION

N.T.S.

D-13

DATE: 7-26-95

REV:

DETAIL

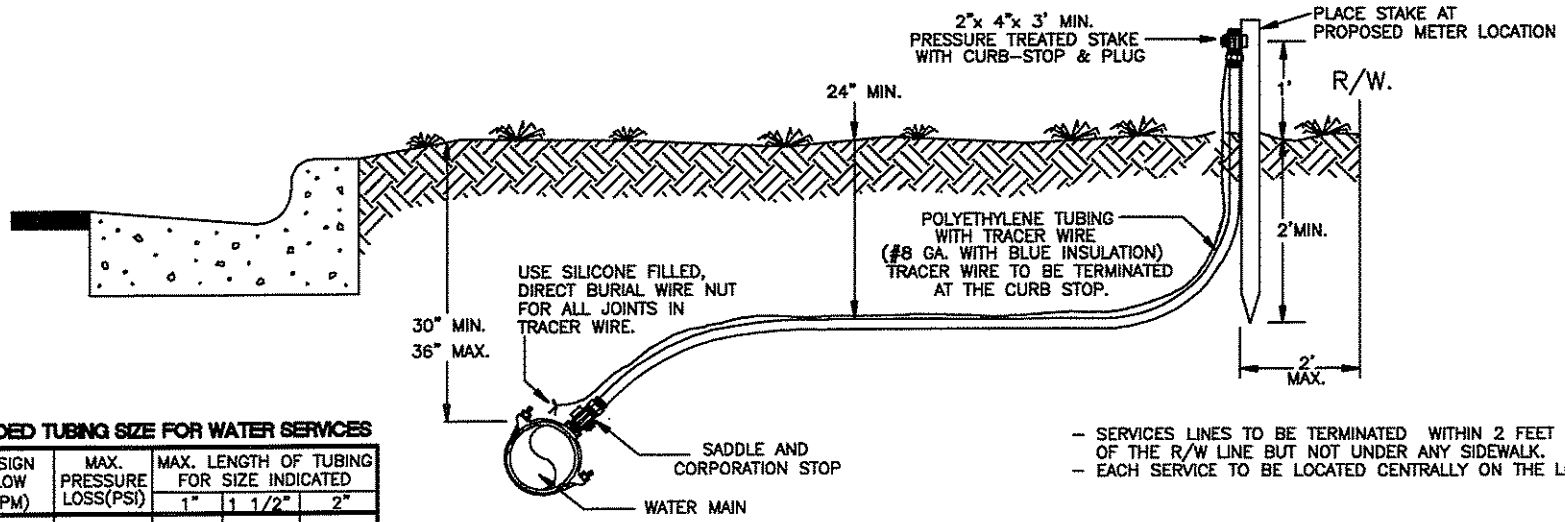

RECOMMENDED TUBING SIZE FOR WATER SERVICES

SIZE OF METER	DESIGN FLOW (GPM)	MAX. PRESSURE LOSS(PSI)	MAX. LENGTH OF TUBING FOR SIZE INDICATED		
			1"	1 1/2"	2"
5/8"	20	10	92	661	2679
1"	50	10	17	121	492
1 1/2"	100	10		34	136
2"	160	10			57

- SERVICES LINES TO BE TERMINATED WITHIN 2 FEET OF THE R/W LINE BUT NOT UNDER ANY SIDEWALK.
- EACH SERVICE TO BE LOCATED CENTRALLY ON THE LOT.

REFER TO SECTIONS 556 & 2556 OF ECUA'S ENGINEERING MANUAL FOR FURTHER INFO.

TYPICAL SHORT SERVICE

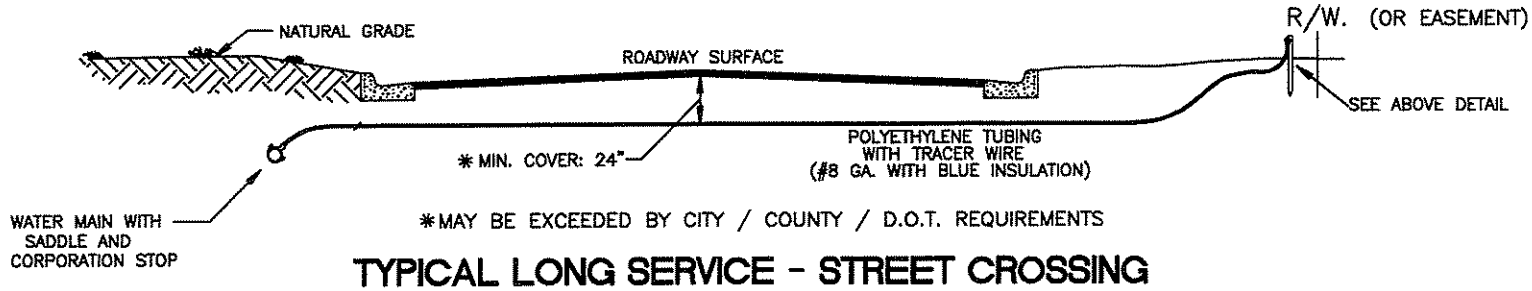

*MAY BE EXCEEDED BY CITY / COUNTY / D.O.T. REQUIREMENTS

TYPICAL LONG SERVICE - STREET CROSSING

EMERALD COAST UTILITIES AUTHORITY

TYPICAL WATER SERVICE INSTALLATION

N.T.S.

DATE: 8-16-95

REV: 5/99

D-21

DETAIL

ALL WORK SHALL CONFORM TO ECUA'S STANDARD SPECIFICATIONS LATEST EDITION

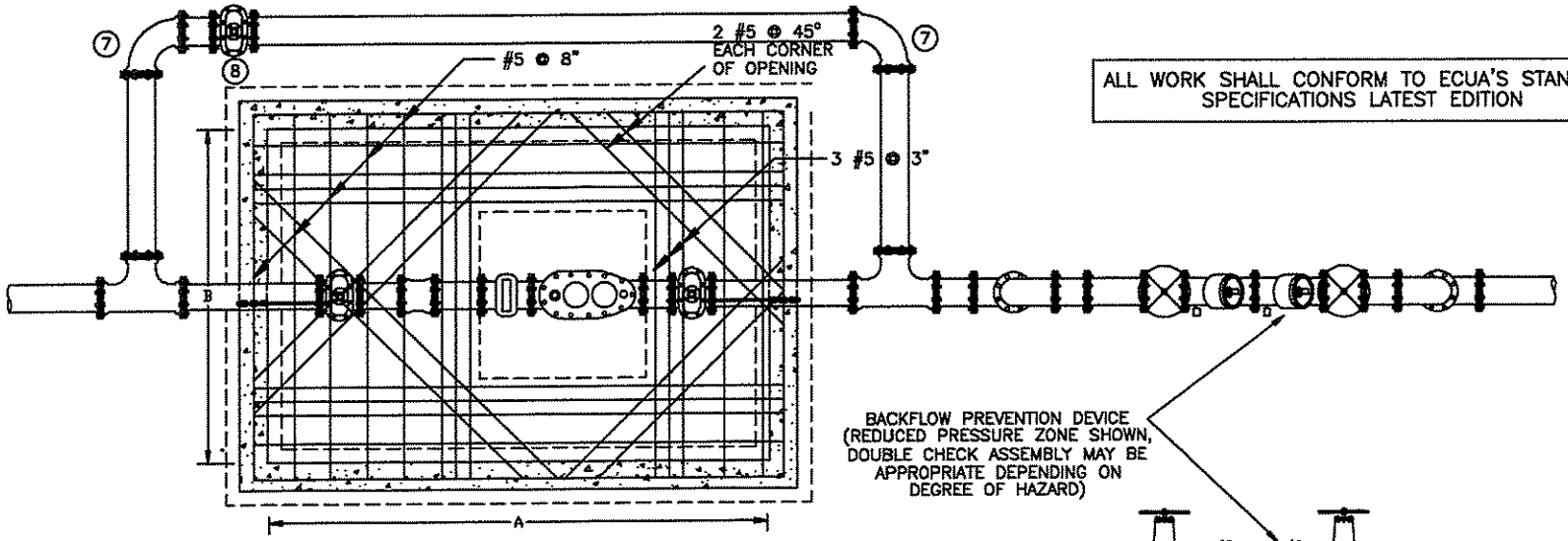

PLAN

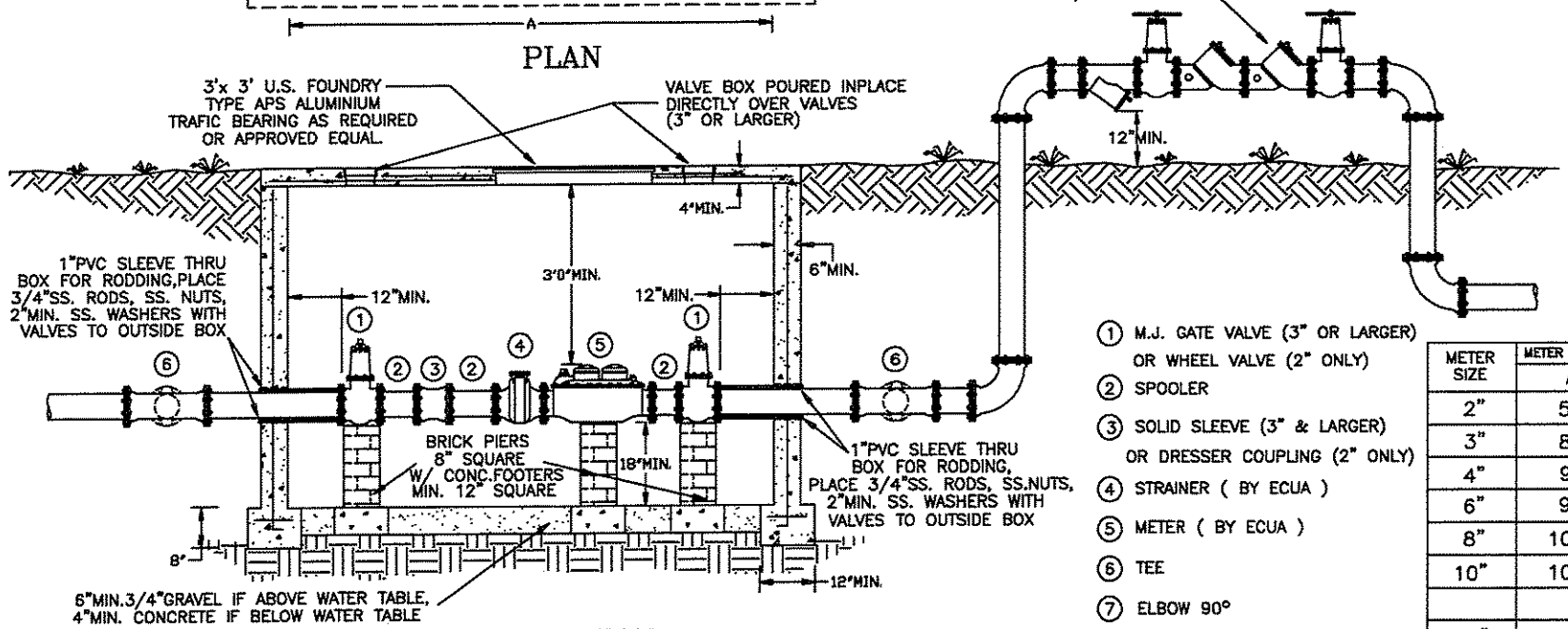

ELEVATION

1. M.J. GATE VALVE (3" OR LARGER) OR WHEEL VALVE (2" ONLY)
2. SPOOLER
3. SOLID SLEEVE (3" & LARGER) OR DRESSER COUPLING (2" ONLY)
4. STRAINER (BY ECUA)
5. METER (BY ECUA)
6. TEE
7. ELBOW 90°
8. M.J. GATE VALVE & BOX

METER SIZE	METER BOX (INSIDE DIMENSIONS)	
	A	B
2"	5'6"	4'6"
3"	8'6"	4'6"
4"	9'0"	5'0"
6"	9'0"	6'0"
8"	10'0"	6'0"
10"	10'0"	6'0"
16"	11'0 "	6'0"

EMERALD COAST UTILITIES AUTHORITY

TYPICAL COMPOUND/TURBINE METER SERVICE
2" AND LARGER

N.T.S.

DATE: 8-22-95

REV:

D-25

DETAIL

NOTES:

1. VALVE BOX AND BOOT SHALL BE CAST IRON.
2. VALVE COVER SHALL BE MARKED "WATER". OR "SEWER" AS APPLICABLE.
3. VALVE BOX TOP SHALL BE FLUSH WITH FINISHED GRADE OR 1/2" ABOVE NATURAL GROUND LEVEL.
4. GATE VALVE SHALL BE RESILIENT SEAT WITH MECHANICAL JOINT ENDS OR APPROVED EQUIVALENT.
5. EARTH UNDER FLANGE OF VALVE BOX & COLLAR TO BE FIRM AND WELL TAMPED TO ENSURE AGAINST VALVE BOX SETTLING.

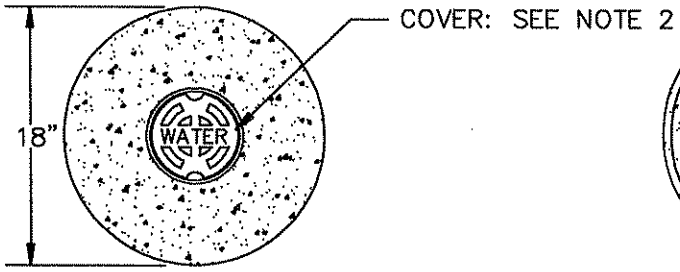

CAST-IN-PLACE COLLAR

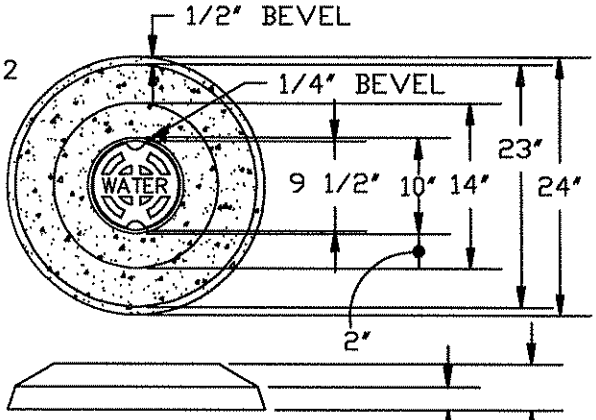

24" PRE-CAST VALVE PAD

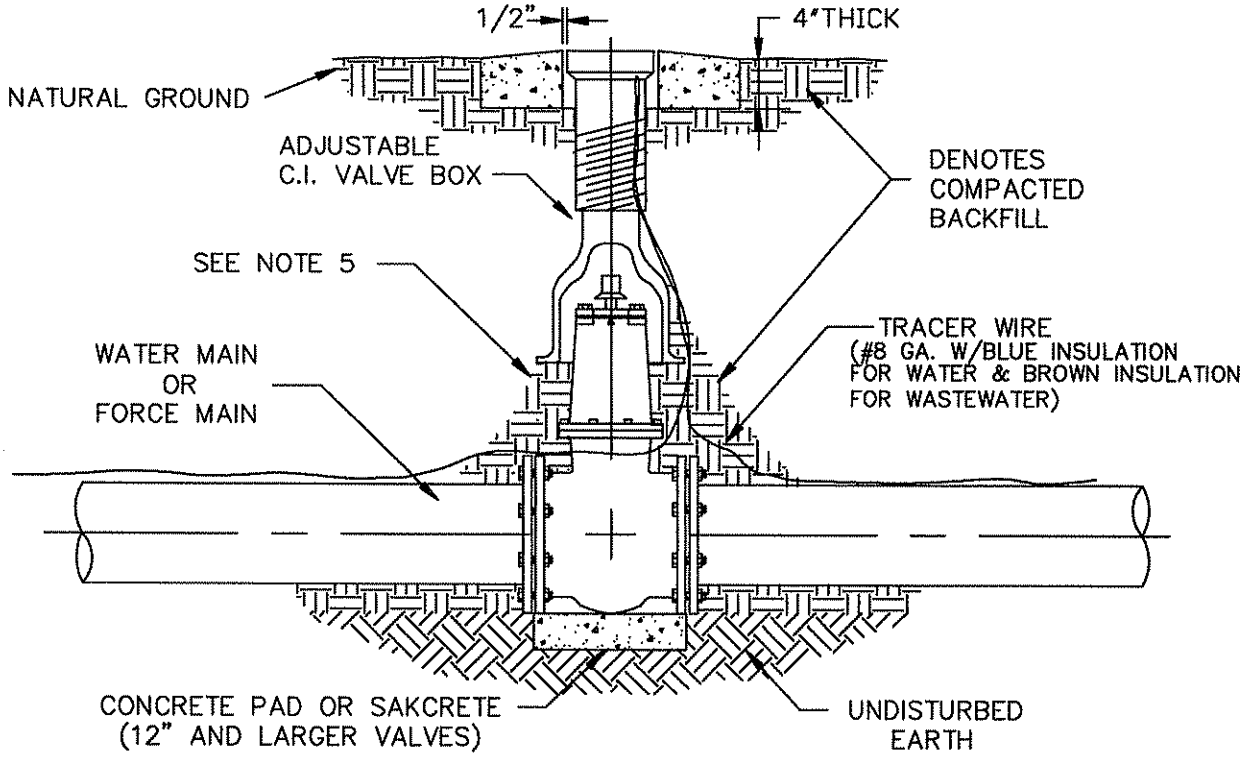

TYPICAL VALVE & BOX INSTALLATION

D-34

DATE: 7-26-95

N.T.S.

REV: 5/99

DETAIL

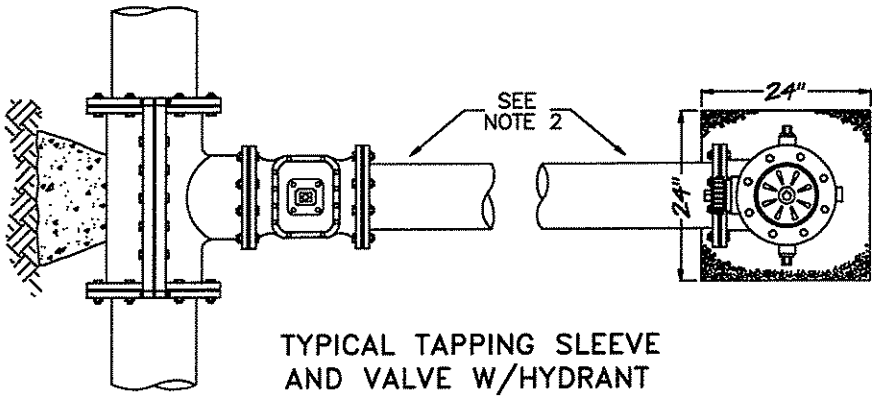

TYPICAL TAPPING SLEEVE
AND VALVE W/HYDRANT

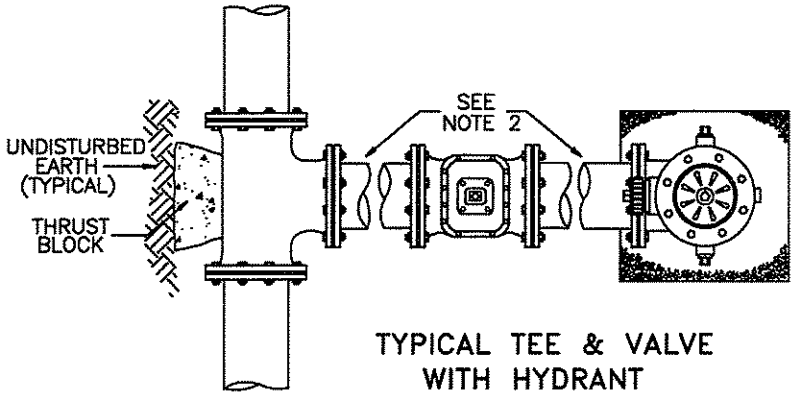

TYPICAL TEE & VALVE
WITH HYDRANT

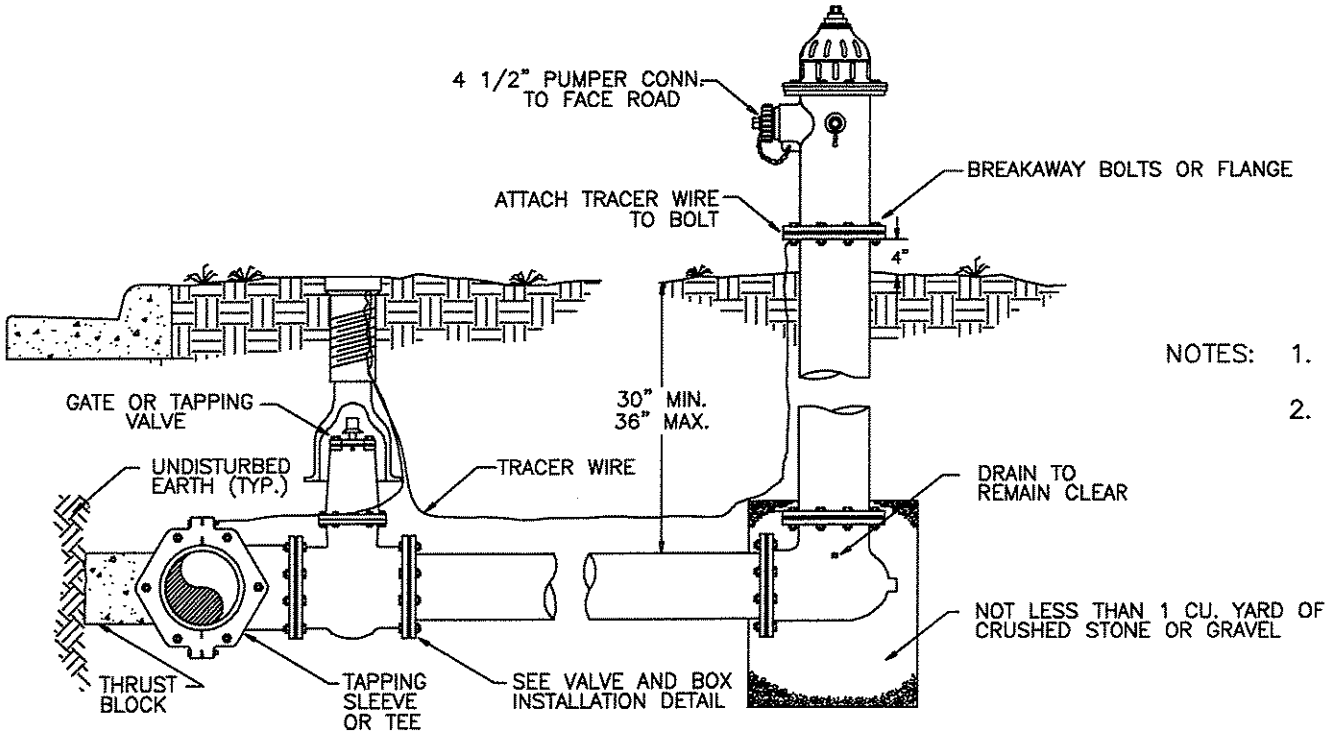

NOTES:
1. CONTRACTOR TO ADJUST FIRE HYDRANT TO FINISHED GRADE.
2. HYDRANT CONNECTORS OR D.I.P. SPOOLS WITH MEGALUG JOINT RESTRAINTS OR APPROVED EQUAL.

EMERALD COAST UTILITIES AUTHORITY

TYPICAL FIRE HYDRANT INSTALLATION:
TAPPING SLEEVE & VALVE and TEE CONNECTION

DATE: 8-16-95

N.T.S.

REV: 6/99

D-35

DETAIL

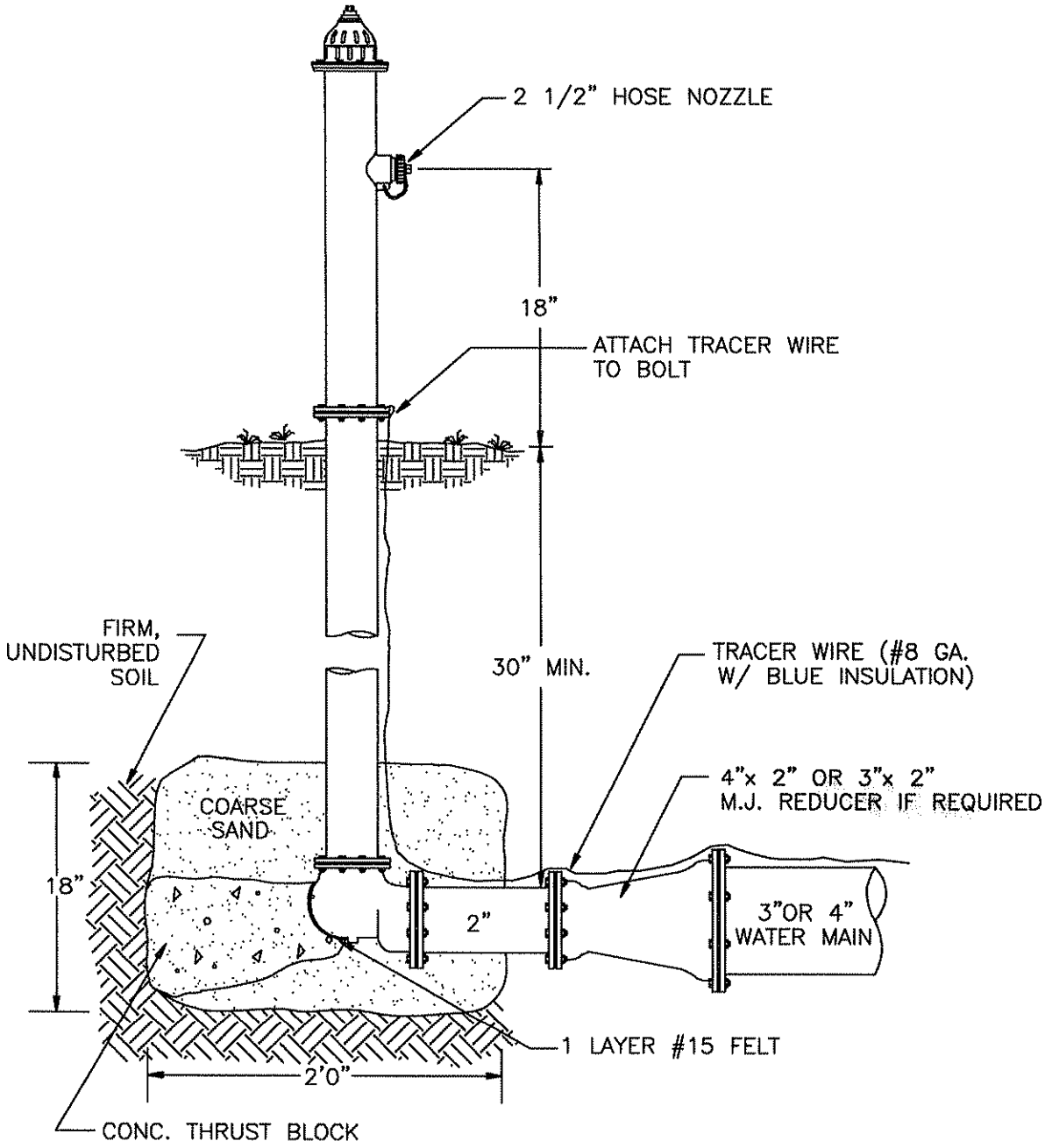

TYPICAL 2" FLUSH HYDRANT

N.T.S.

D-41

DATE: 8-09-95

REV:

DETAIL

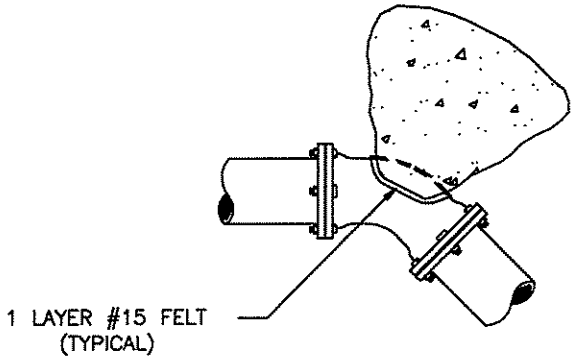

45° BEND – M.J.

MINIMUM THRUST BLOCK DIMENSIONS: SURFACE AREA AGAINST UNDISTURBED SOIL

FITTING / PIPE SIZE	DEAD END OR TEE	90° BEND	45° BEND	22.5° BEND
4"	1' X 2'	1.5' X 1.5'	1' X 1.5'	1' X 1'
6"	2' X 2'	2.5' X 2.5'	2' X 1.5'	1' X 1.5'
8"	2.25' X 3'	3' X 3'	2' X 2.5'	1.5' X 1.5'
10"	3.5' X 3'	4' X 3.75'	2.75' X 3'	2' X 2'
12"	4' X 4'	4' X 5'	3' X 4'	2' X 3'
16"	5' X 5.5'	6' X 6.5'	4' X 5'	3' X 3.5'

NOTES:

1. ONE LAYER OF #15 FELT TO BE USED TO PREVENT ADHESION OF CONCRETE TO FITTING.
2. ALL THRUST BLOCKS TO BE BACKED BY UNDISTURBED SOIL
3. THRUST BLOCK DIMENSIONS BASED ON SM SOIL CLASSIFICATION
4. CONCRETE MIN. 2,500 PSI.
5. JOINT RESTRAINTS ARE TO BE USED ON ALL FITTINGS. TRUST BLOCKS REQUIRED ON 90° BENDS, 45° BENDS, TEES, TAPPING SLEEVES, AND DEAD ENDS.

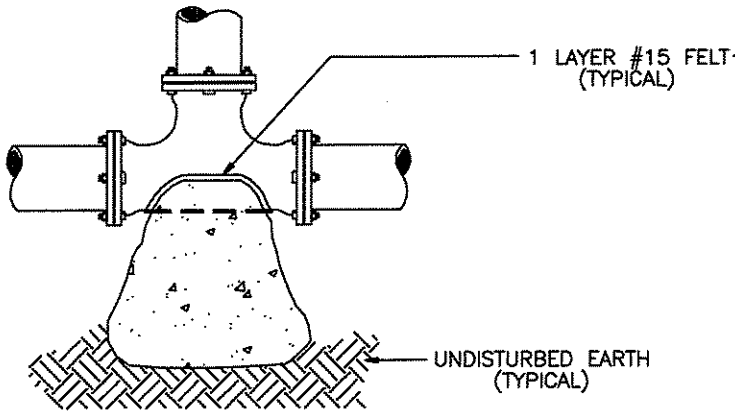

TEE – M.J.

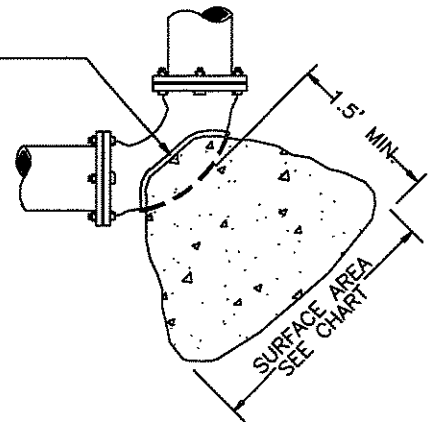

90° BEND – M.J.

TYPICAL THRUST BLOCK INSTALLATIONS

D–43

DATE: 7–28–95

N.T.S.

REV: 6/99

DETAIL

PIPE JOINT RESTRAINT TABULATION

SHOWING DISTANCES IN FEET FROM THE FITTING TO BE RESTRAINED TO THE LAST RESTRAINING GLAND REQUIRED

PIPE SIZE AND TYPE	HORIZONTAL BENDS				DEAD ENDS	EQUAL TEES See note 3
	90 Deg.	45 Deg.	22.5 Deg.	11.25 Deg.		
3" DI	18	8	4	2	33	1
4" DI	22	9	4	2	39	1
6" DI	31	13	6	3	55	1
8" DI	40	17	8	4	72	1
10" DI	48	20	9	5	86	1
12" DI	56	23	11	5	101	1
16" DI	70	29	14	7	129	1
20" DI	84	35	17	8	156	18
24" DI	96	40	19	9	181	41
4" PVC	28	12	6	3	62	1
6" PVC	39	16	8	4	87	1
8" PVC	50	21	10	5	114	1
10" PVC	60	25	12	6	136	1
12" PVC	70	29	14	7	160	1
16" PVC	88	36	17	9	205	1
20" PVC	105	43	21	10	247	29
24" PVC	120	50	24	12	287	64

NOTES :
1. Test pressure = 150 psi, soil group = SM, trench type = 3, depth = 2.5', safety factor = 2
2. Restrained lengths for vertical offsets, reducers & unequal size tees must be individually calculated.
3. With equal tees, the distances shown are with a run length of 40' as an example only. For other lengths and for unequal tees, individual calculations must be made.

SANITARY SEWER LINES (GRAVITY OR PRESSURE) SHALL HAVE 18" OR GREATER VERTICAL CLEARANCE BELOW ANY POTABLE WATER LINE WHEN CROSSING. A MINIMUM OF 6" VERTICAL CLEARANCE IS REQUIRED FOR OTHER UTILITIES. HORIZONTAL CLEARANCE BETWEEN SANITARY SEWER LINE THAT IS PARALLEL TO AND LESS THAN 18" BELOW A POTABLE WATER LINE SHALL BE 10' OR GREATER. A MINIMUM OF 30" IS REQUIRED FOR OTHER UTILITIES.

IF THIS IS NOT POSSIBLE OR PRACTICAL, SEE NOTES BELOW:

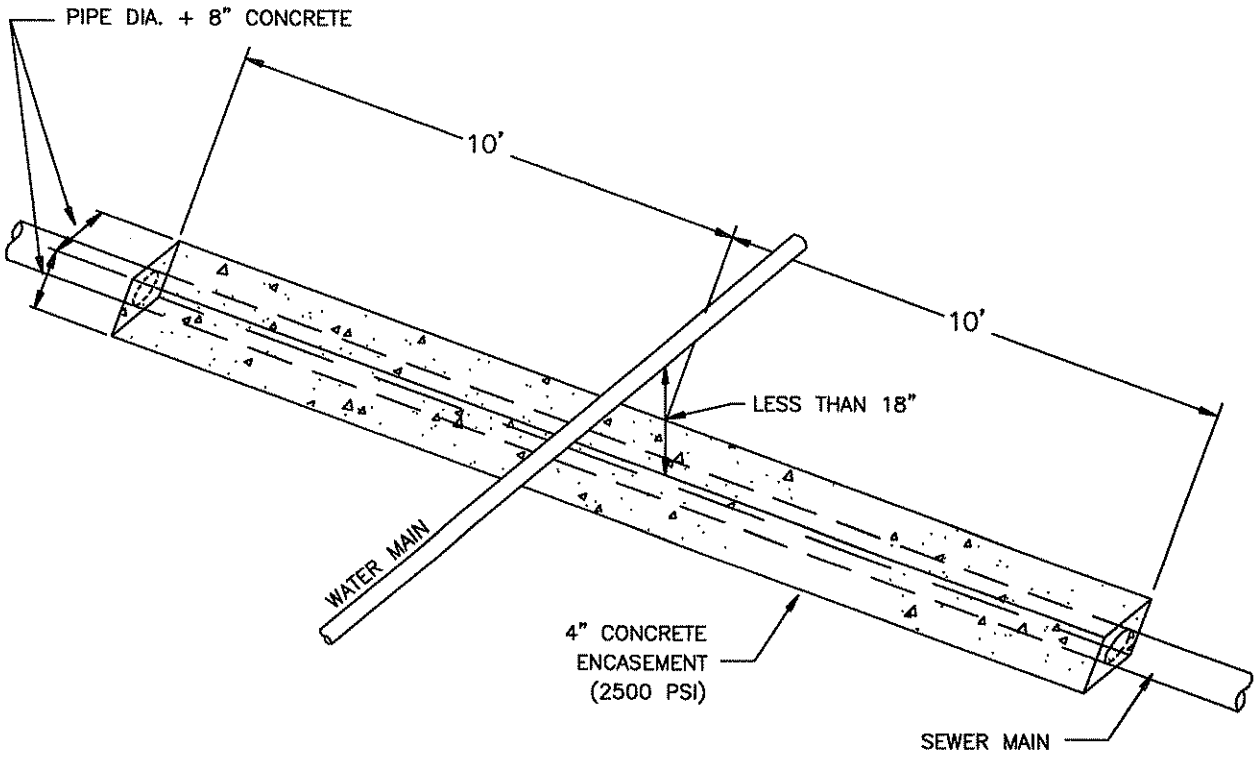

FOR CROSSING: ENCASE AS ABOVE SO THAT THE ENDS OF ENCASEMENT ARE AT LEAST 12' FROM ANY WATER LINE JOINT. WATER LINE JOINT MUST NOT BE CLOSER THAN 5' TO THE POINT OF CROSSING, OR IT MUST ALSO BE ENCASED.

ALTERNATE 1: USE EQUALLY (OR HIGHER) RATED PRESSURE PIPE FOR SEWER WITH NO JOINTS CLOSER THAN 12' APART AND 6" VERTICAL.

ALTERNATE 2: PLACE SEWER LINE INTO STEEL CASING AND CENTER 20' PIECE WITH 4' VERTICAL CLEARANCE AND SEAL ENDS.

FOR PARALLEL: AND 6' TO 10' APART USE ALTERNATE 2, BUT IF MORE THAN 40' IN LENGTH, ALTERNATE 1 MUST BE USED AND JOINTS ARE TO BE STAGGERED. IF LINES MUST BE 3' TO 6' APART, ALTERNATE 1 MUST BE USED WITH A HIGHER RATED PRESSURE PIPE FOR SEWER (i.e., WATER LINE IS DR25 THEN USE DR18 OR 21 FOR SEWER).

	SEWER / WATER SEPARATION & CLEARANCES	D-56
DATE: 7-19-95	N.T.S. REV:	DETAIL

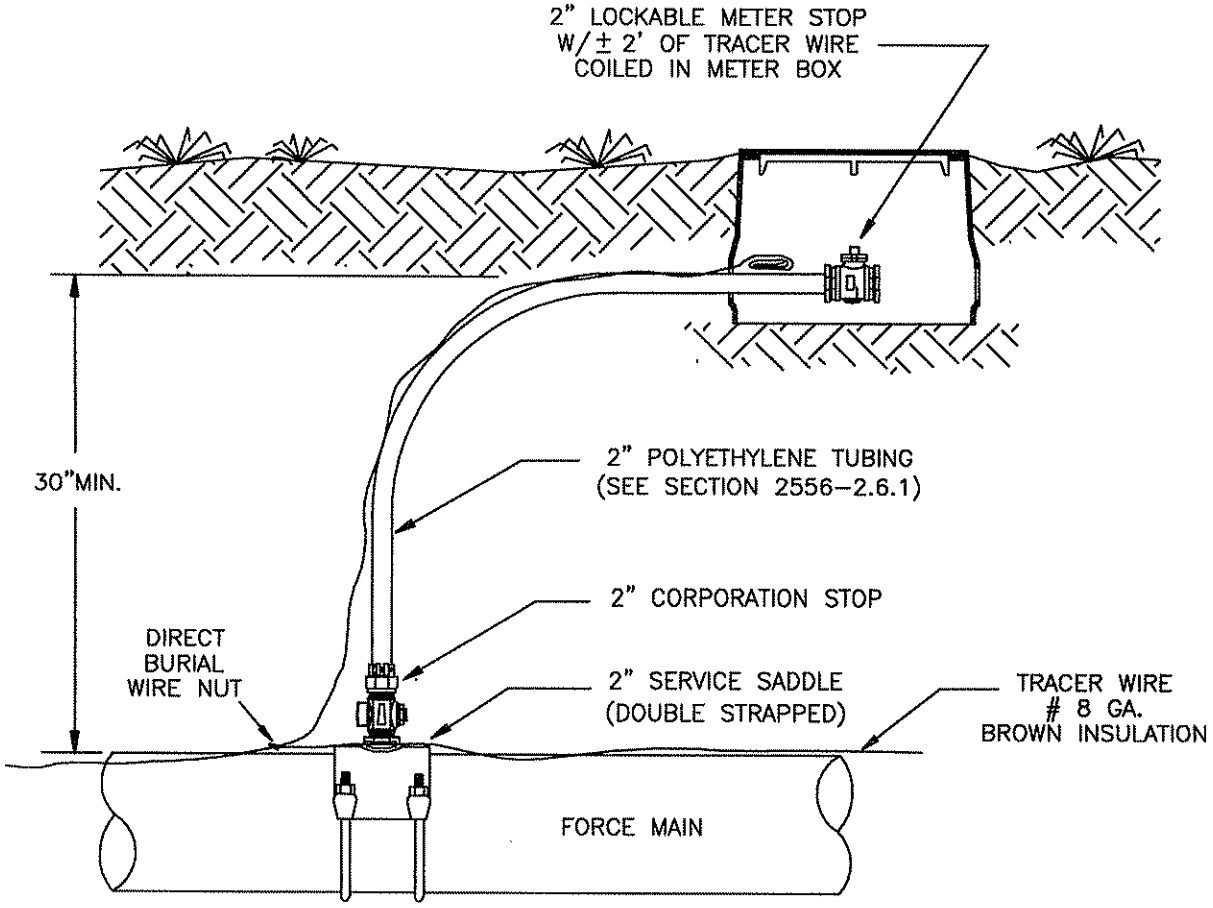

NOTE:
USE OF MANUAL ARV REQUIRES E.C.U.A. APPROVAL.

AIR RELEASE VALVE

N.T.S.

D-60

DATE: 9-8-95

REV: 6/99

DETAIL

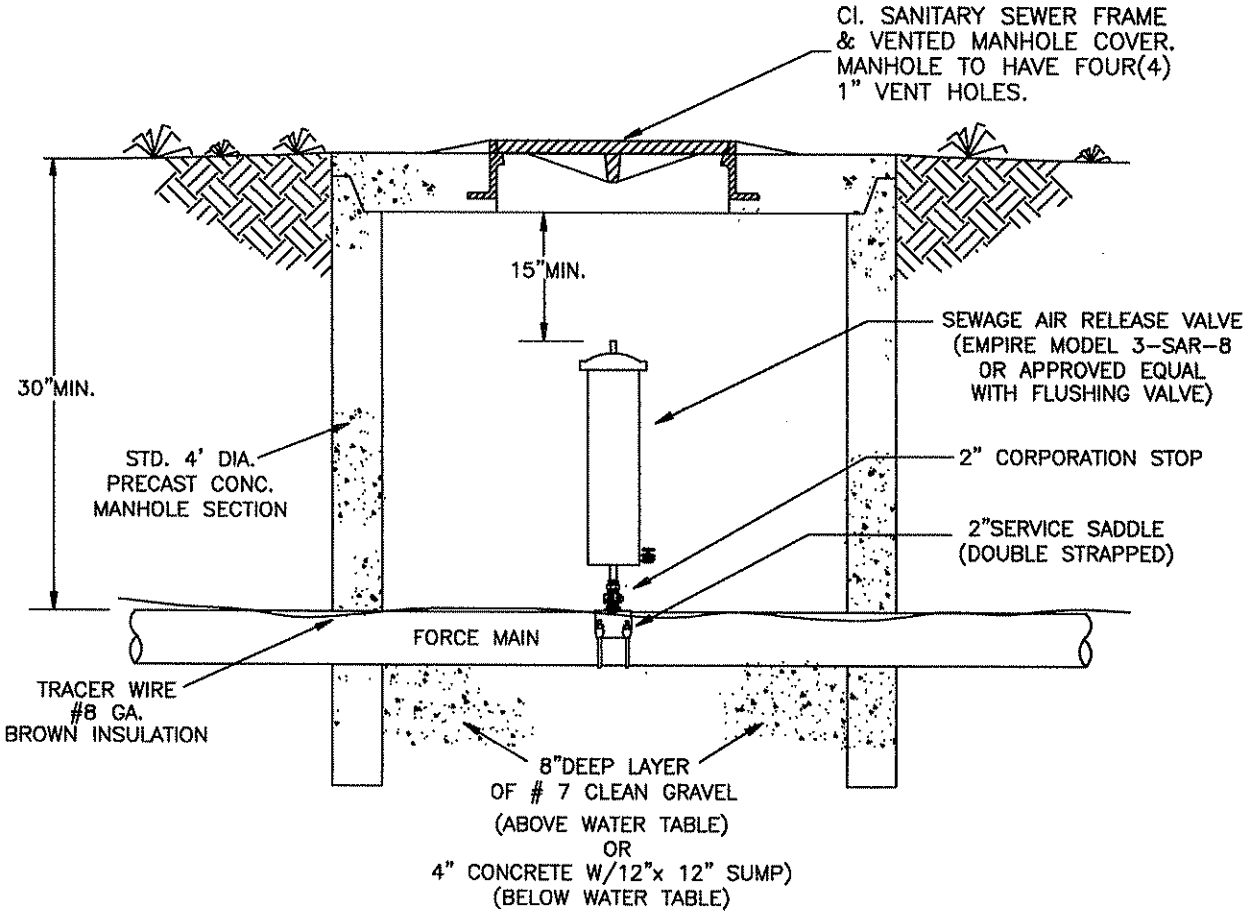

AUTOMATIC AIR RELEASE VALVE

N.T.S.

D-61

DATE: 9-8-95

REV: 6-1-99

DETAIL